NEXT ASS'Y: FINAL ASS'Y:

NOTES

1. INTERPRET DRAWING PER GLOBAL ENGINEERING DOCUMENTS DRAWING REQUIREMENTS MANUAL.
2. INTERPRET DIMENSIONS AND TOLERANCES PER ASME Y14.5M.
3. DIMENSIONS ARE IN INCHES.
4. BUTTON HEAD CAP SCREWS, FIND NO. 9, SHALL BE INSTALLED WITH LOCTITE, FIND NO. 12, IN ACCORDANCE WITH LOCTITE PROCEDURES AND TIGHTENED TO 75 FT.-LBS.
5. FLAT HEAD CAP SCREWS, FIND NO. 11, SHALL BE INSTALLED WITH LOCTITE, FIND NO. 12, IN ACCORDANCE WITH LOCTITE PROCEDURES AND TIGHTENED TO 6 IN.-LBS.
6. UNBRAKO DIV/SPS TECHNOLOGIES, 4444 LEE RD. CLEVELAND OHIO 44128
7. LOCTITE CORPORATION, 1001 TROUT BROOK CROSSING, ROCK HILL, CT. 06067-3910.
8. McMASTER-CARR SUPPLY COMPANY 6100 FULTON INDUSTRIAL BOULEVARD ATLANTA, GEORGIA 30336-2852
9. GUIDE LOWER SHIM THICKNESS SHALL BE DETERMINED AT FINAL ASSEMBLY.
10. BALL GUIDE SHIM THICKNESS SHALL BE DETERMINED AT FINAL ASSEMBLY.

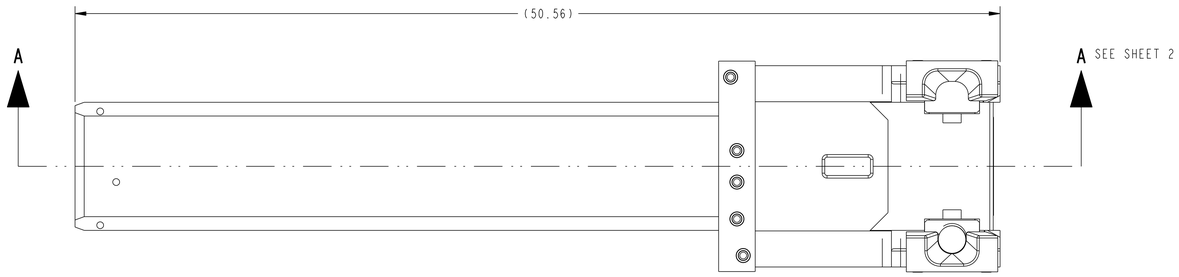

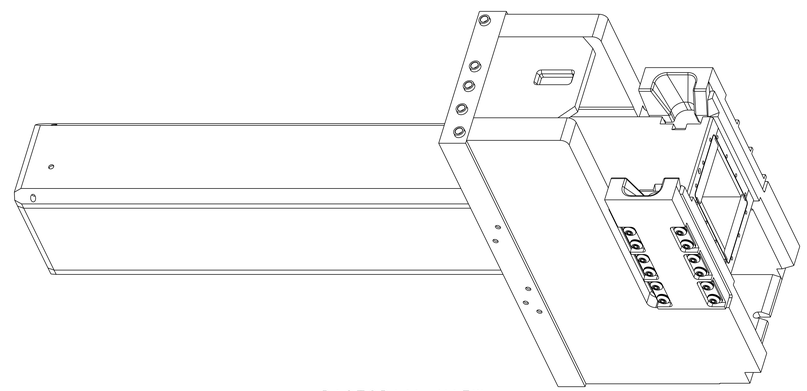

PICTORIAL VIEW
SCALE 0.250

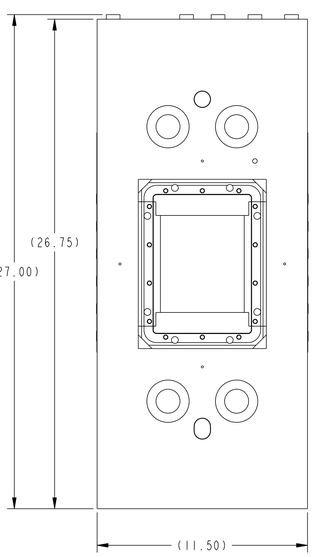

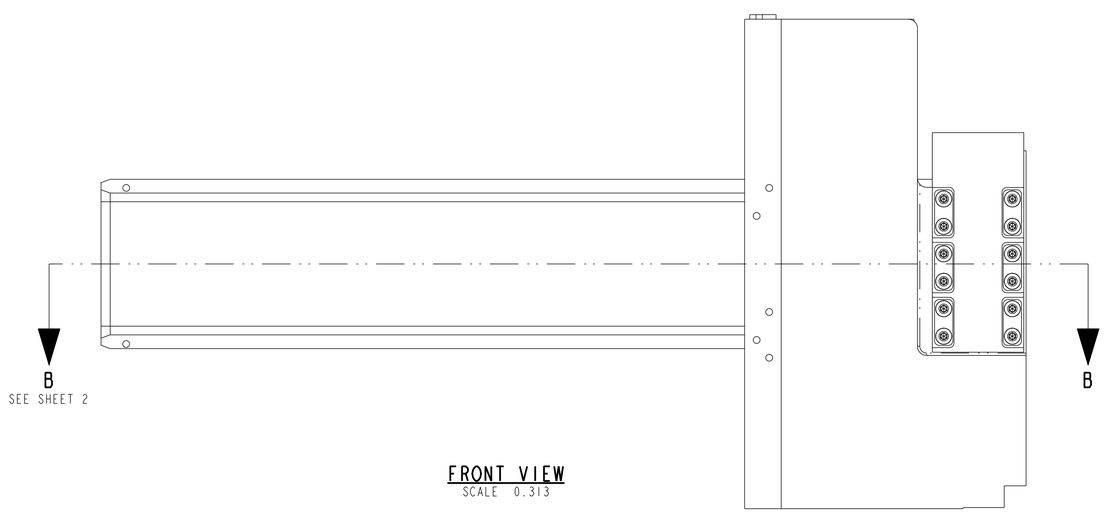

FRONT VIEW
SCALE 0.313

			24		S300NA46CAM27835NNCE	BUTTON HEAD CAP SCREW	ALLOY STEEL	ASTM F835	11
			24		91074A133	PERMANENT TIGHT LOCK WASHER	STEEL	--	10
		7	1		271-LOCTITE	RETAINING COMPOUND	PURCHASED	---	9
5	6	7	12		107030600M8E8700A143-1	C.V.I. BACKING PLATE DETAIL	CARBON STEEL	ASTM A36	8
		8	1		107030600M8E8700A134-1	LEFT SIDE BALL GUIDE	STAINLESS STEEL	316L	7
4	7	8	4		107030600M8E8700A133-1	BALL GUIDE SHIM	STAINLESS STEEL	316L	6
			1		107030600M8E8700A132-1	RIGHT SIDE BALL GUIDE	STAINLESS STEEL	316L	5
			2		107030600M8E8700A129-1	GUIDE LOWER SHIM	STAINLESS STEEL	316L	4
			1		107030600M8E8700A125-2	TOOLING BALL	STAINLESS STEEL	316L	3
			1		107030600M8E8700A128-1	SINGLE C.V. INSERT WELDMENT	---	---	2
			1		107030600M8E8700A127-1	WELDMENT W/GUIDE ASSEMBLY	---	---	1
107030600M8E8700A126			CAGE CODE		PART OR IDENTIFYING NO	NOMENCLATURE OR DESCRIPTION	MATERIAL	SPECIFICATION	FIND NO
			NEXT ASSEMBLY			PARTS LIST			

QUALITY VERIFICATION
MECHANICAL AND STRUCTURAL
REFERENCE SNS-QA-G002

QV CLAUSE	DOCUMENTS REQUIRED	APPLICABLE TO PART NO *
303	MATERIAL MILL TEST REPORT	-
325	MATERIAL SELLER CERT	-
326	SPECIAL MATERIAL INSPECTION REPORT	-
205	MANUFACTURING, INSPECTION, AND TEST PLAN	-
312	FIELD INSPECTION AND TEST PLAN	-
321	WELD AND BRAZE INSPECTION REPORT	-
322	HEAT TREAT REPORT (W/CHART)	-
310	LEAK TEST REPORT	-
315	CLEANING CERT	-
318	DEVIATION REQUEST	-
319	NONCONFORMANCE PROCESS	-
323	DIMENSIONAL REPORT	-
330	FUNCTIONAL TEST REPORT	-
:	:	:
:	:	:
:	:	:
:	:	:
:	:	:
:	:	:
100	DOCUMENTATION	-

* SYMBOL X INDICATES APPLICABLE TO ALL PARTS OR ITEMS

QA REP ..... DATE .....

RPE

REV. XX DATE XX/XX/XX

107030600M8E8700A127

PRELIMINARY

NO REPRESENTATION OR WARRANTY, EXPRESSED OR IMPLIED, IS MADE AS TO THE ACCURACY, COMPLETENESS OR USEFULNESS OF THE INFORMATION OR STATEMENTS CONTAINED IN THESE DRAWINGS, OR THAT THE USE OR DISCLOSURE OF ANY INFORMATION, APPARATUS, METHOD OR PROCESS DISCLOSED IN THESE DRAWINGS MAY NOT INFRINGE PRIVATE RIGHTS OF OTHERS. NO LIABILITY IS ASSUMED WITH RESPECT TO THE USE OF, OR FOR DAMAGES RESULTING FROM THE USE OF, ANY INFORMATION, APPARATUS, METHOD OR PROCESS DISCLOSED IN THESE DRAWINGS. DRAWINGS MADE AVAILABLE FOR INFORMATION TO BIDDER ARE NOT TO BE USED FOR OTHER PURPOSES, AND ARE TO BE RETURNED UPON REQUEST OF THE FORWARDING CONTRACTOR.

P THIS DRAWING PRODUCED ON PRO-ENGINEER

THIS DOCUMENT CONTROLLED BY
CHANGE CONTROL SYSTEM 3
ENGINEERING PROCEDURES SNS-TS-G001

REV	CHANGE TYPE	CHANGE CONTROL SYSTEM	CHANGE REQUEST NUMBER	DESCRIPTION	BY	CHK	SECT	DEPT	DATE	PE	REQ	DOE	PJ
ROC	—	3	—	ISSUE FOR COMMENT AND INFORMATION	SMR				11/01				

REVISION OR ISSUE PURPOSE — REVISION APPROVALS

SCALE AS NOTED

TOLERANCES UNLESS OTHERWISE SPECIFIED
FRACTIONS :
XX DECIMALS ±.01
XXX DECIMALS ±.005
ANGLES ±0°15'
BREAK SHARP EDGES .06 MAX
FINISH 125 RMS UNLESS OTHERWISE SPECIFIED

DES	DMW/MEP	11/01
DRW	M.E.PHILLIPS	11/01
CHK	:	:
L3	:	:
L2	:	:
:	T.E. FORNEK	11/01
:	:	:
:	:	:
:	:	:
:	:	:
:	:	:
:	:	:
:	:	:
DRAWING APPROVALS		DATE

ornl Oak Ridge National Laboratory
operated for the DEPARTMENT OF ENERGY under U.S. GOVERNMENT contract DE-AC-05-84OR21400
Oak Ridge, Tennessee

SNS Spallation Neutron Source

SPALLATION NEUTRON SOURCE PROJECT
SINGLE CORE VESSEL INSERTS
SINGLE C.V. INSERT W/GUIDES

BLDG	FL	SHT	OF	CLASS
8700	IST	1	2	U

107030600M8E8700A127 REV ROC

NEXT ASS'Y:

FINAL ASS'Y:

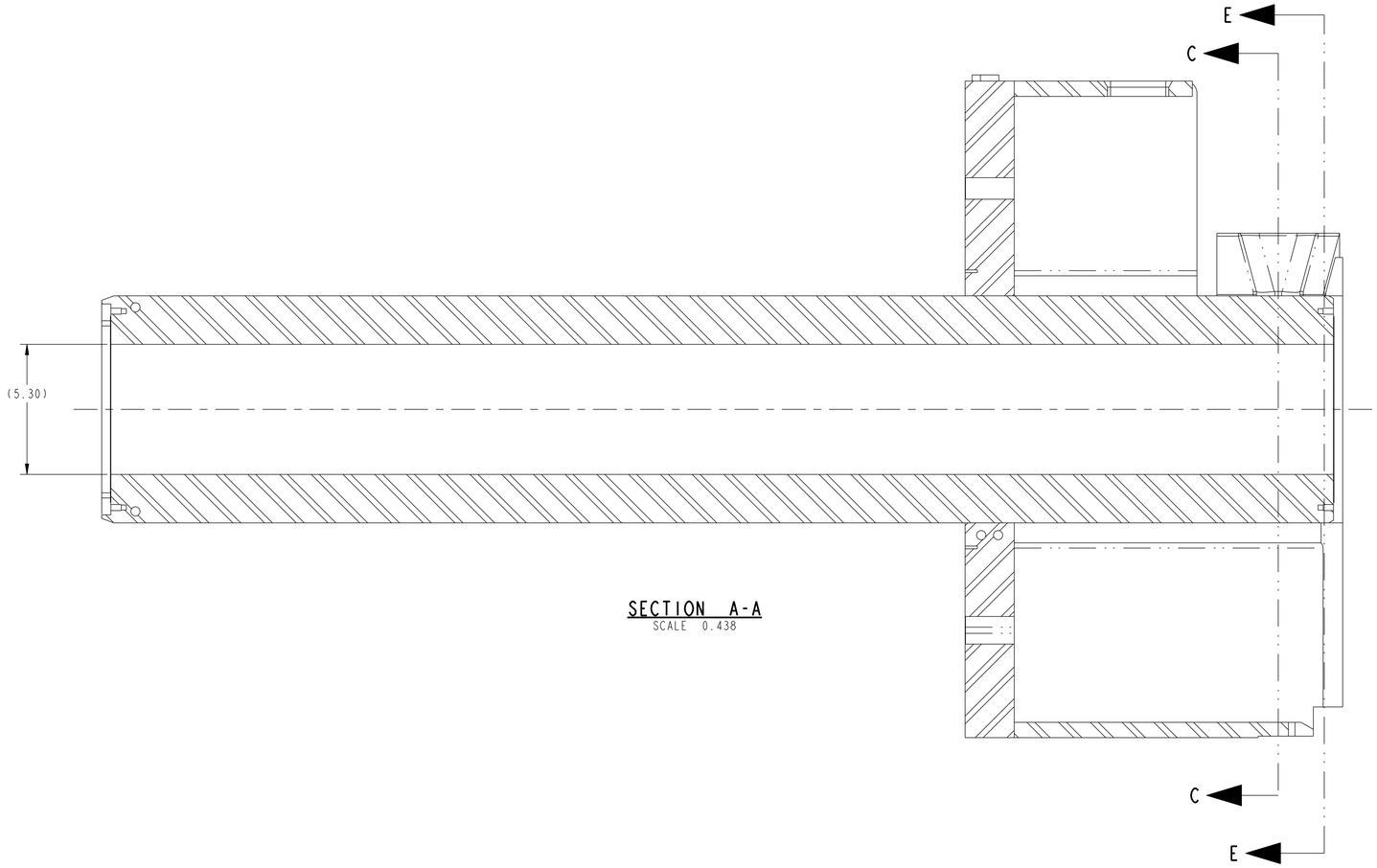

SECTION A-A
SCALE 0.438

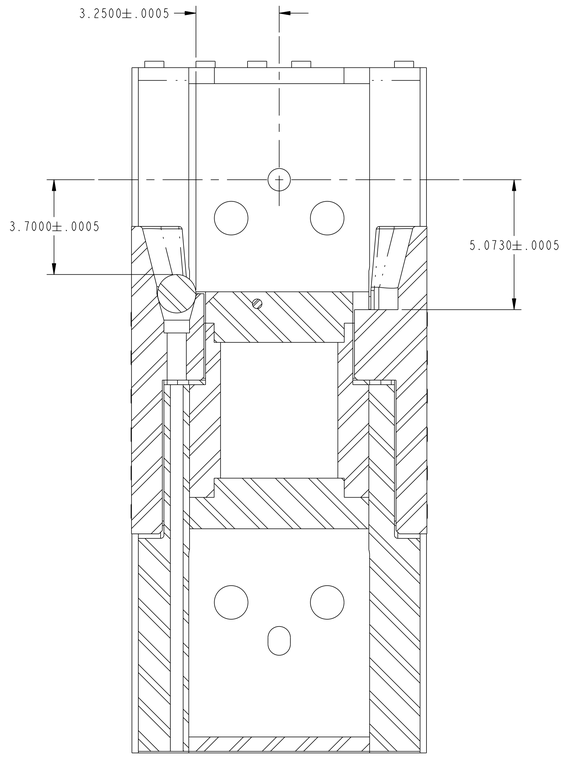

SECTION C-C

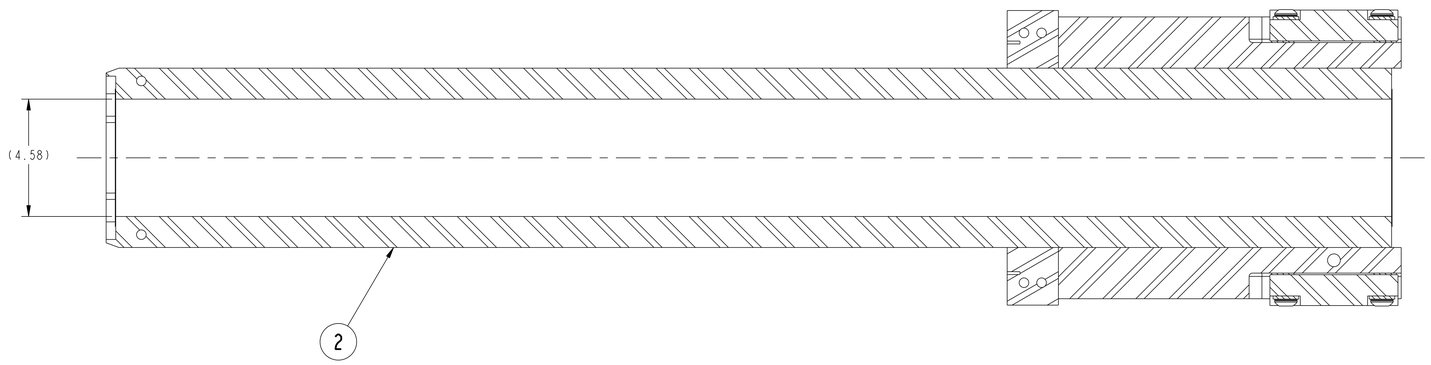

SECTION B-B
SCALE 0.438

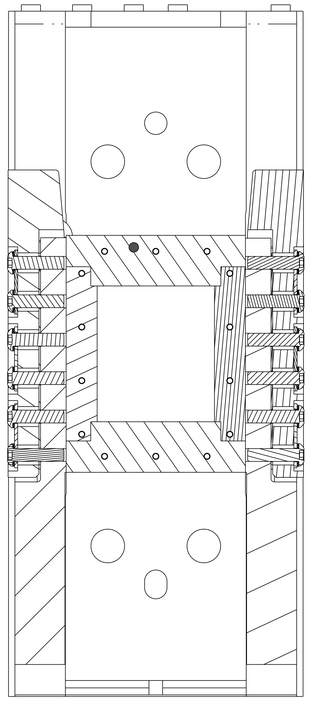

SECTION E-E
SCALE 0.438

NO REPRESENTATION OR WARRANTY,EXPRESSED OR IMPLIED,IS MADE AS TO THE ACCURACY, COMPLETENESS OR USEFULNESS OF THE INFORMATION OR STATEMENTS CONTAINED IN THESE DRAWINGS, OR THAT THE USE OR DISCLOSURE OF ANY INFORMATION, APPARATUS, METHOD OR PROCESS DISCLOSED IN THESE DRAWINGS MAY NOT INFRINGE PRIVATE RIGHTS OF OTHERS. NO LIABILITY IS ASSUMED WITH RESPECT TO THE USE OF, OR FOR DAMAGES RESULTING FROM THE USE OF, ANY INFORMATION, APPARATUS, METHOD OR PROCESS DISCLOSED IN THESE DRAWINGS. DRAWINGS MADE AVAILABLE FOR INFORMATION TO BIDDER ARE NOT TO BE USED FOR OTHER PURPOSES, AND ARE TO BE RETURNED UPON REQUEST OF THE FORWARDING CONTRACTOR.

P THIS DRAWING PRODUCED ON PRO-ENGINEER

PRELIMINARY

SCALE **AS NOTED**

TOLERANCES UNLESS OTHERWISE SPECIFIED

FRACTIONS :
XX DECIMALS ±.01
XXX DECIMALS ±.005
ANGLES ±0°15'
BREAK SHARP EDGES .06 MAX
FINISH 125 RMS UNLESS OTHERWISE SPECIFIED

ornl Oak Ridge National Laboratory
operated for the DEPARTMENT OF ENERGY under U.S. GOVERNMENT contract DE-AC05-00OR22725
Oak Ridge, Tennessee

SNS Spallation Neutron Source

SPALLATION NEUTRON SOURCE PROJECT
SINGLE CORE VESSEL INSERTS
SINGLE C.V. INSERT W/GUIDES

BLDG	FL	SHT	OF	CLASS
8700	1ST	2	2	U

I07030600M8E8700A127

REV R0C

I07030600M8E8700A127