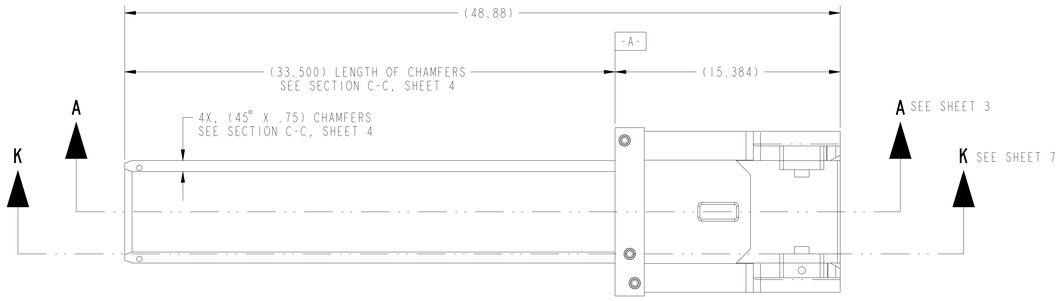

TOP VIEW
SCALE 0.250

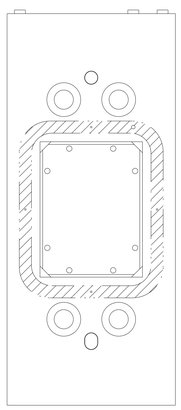

LEFT END VIEW
SCALE 0.25

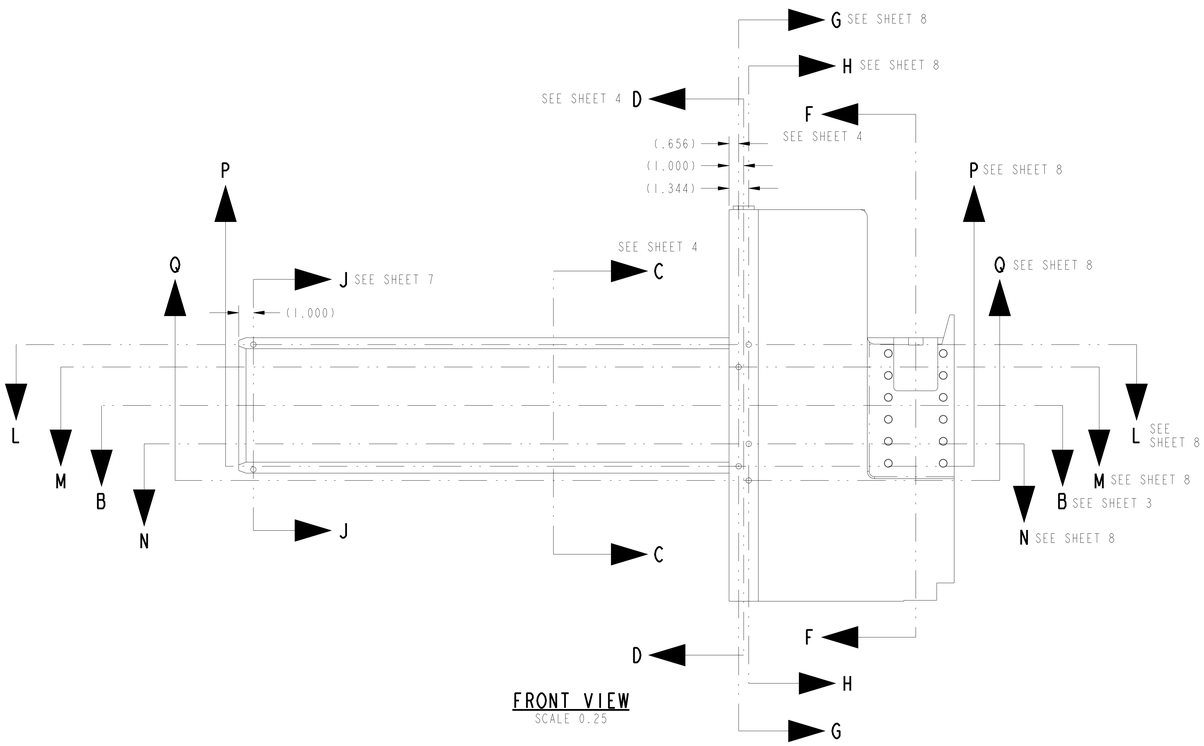

FRONT VIEW
SCALE 0.25

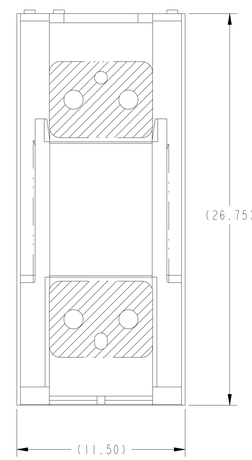

RIGHT END VIEW
SCALE 0.25

BOTTOM VIEW
SCALE 0.25

NOTES

1. INTERPRET DRAWING PER GLOBAL ENGINEERING DOCUMENTS DRAWING REQUIREMENTS MANUAL.
2. INTERPRET DIMENSIONS AND TOLERANCES PER ASME Y14.5M.
3. DIMENSIONS ARE IN INCHES.
4. INTERPRET WELDING AND NONDESTRUCTIVE EXAMINATION SYMBOLS PER AWS A2.4.
5. USE PROCEDURES, WELDERS, WELDING OPERATORS AND TACKERS QUALIFIED PER AWS B2.1 AND D1.1.
6. DIMENSIONAL STABILITY OF CORE VESSEL INSERT WELDMENT (FIND NO. 1) SHALL BE MAINTAINED THROUGH ALL MACHINING OPERATIONS. SELLER SHALL STRESS RELIEF CORE VESSEL INSERT WELDMENT BY HEAT-TREATING AS REQUIRED TO ACCOMPLISH STABILITY. ALL DIMENSIONS APPLY AFTER WELDING.
7. CORE VESSEL INSERT WELDMENT (FIND NO. 1) SHALL BE NICKEL PLATED 0.0005 TO 0.0008 THICK. DIMENSIONS APPLY AFTER PLATING.
8. OPTIONAL CONSTRUCTION METHODS SHALL BE ALLOWED PER APPROVAL OF BUYER. SOME OPTIONAL METHODS ARE LISTED SUCH AS:
   a) ONE PIECE CONSTRUCTION.
   b) CONSTRUCTION FROM RECTANGULAR TUBING.
   c) CONSTRUCTION FROM FORGING.
9. RECESS PLUGS, FIND NOS. 9 THRU 14, APPROXIMATELY 1/8" AND THEN BRAZE WELD THEM INTO PLACE. ALL PLUGS SHALL BE LEAK CHECKED.
10. THERE ARE 8 HOLES (Ø.375) DRILLED FROM THE LEFT END THAT CAN HAVE REGULAR 118° TWIST DRILL ENDS. ALL OF THE REMAINING Ø.375 HOLES SHOULD BE REAMED TO THE DEPTHS GIVEN. SEE SECTIONS D, G, H, J, K, L, M, N, P & Q.

		CAGE CODE	PART OR IDENTIFYING NO	NOMENCLATURE OR DESCRIPTION	MATERIAL	SPECIFICATION	FIND NO
9	4		107030600M8E8700A121-14	PLUG, .38 DIA. X .38 LG.	STAINLESS STEEL	316L	14
9	2		107030600M8E8700A121-13	PLUG, .38 DIA x 1.25 LG	STAINLESS STEEL	316L	13
9	10		107030600M8E8700A121-12	PLUG, .38 DIA x .56 LG	STAINLESS STEEL	316L	12
9	2		107030600M8E8700A121-11	PLUG, .38 DIA x 1.22 LG	STAINLESS STEEL	316L	11
9	4		107030600M8E8700A121-10	PLUG, .38 DIA x .68 LG	STAINLESS STEEL	316L	10
9	2		107030600M8E8700A121-9	PLUG, .38 DIA x 7.93 LG	STAINLESS STEEL	316L	9
	3		107030600M8E8700A121-8	TUBING NIPPLE	STAINLESS STEEL	316L	8
	1		107030600M8E8700A121-7	BOTTOM GUSSET	STAINLESS STEEL	316L	7
	1		107030600M8E8700A121-6	TOP GUSSET	STAINLESS STEEL	316L	6
	1		107030600M8E8700A121-5	LEFT GUIDE PLATE	STAINLESS STEEL	316L	5
	1		107030600M8E8700A121-4	RIGHT GUIDE PLATE	STAINLESS STEEL	316L	4
	1		107030600M8E8700A121-3	FLANGE PLATE	STAINLESS STEEL	316L	3
	1		107030600M8E8700A121-2	TOP/BOTTOM PLATE	STAINLESS STEEL	316L	2
	1		107030600M8E8700A121-1	SINGLE C V PLUG WELDMENT	---	---	1

4 5 6 7 8 9 10

107030600M8E8700A120 -1

NEXT ASSEMBLY

PARTS LIST

QUALITY VERIFICATION

MECHANICAL AND STRUCTURAL
REFERENCE SNS-QA-G002

QV CLAUSE	DOCUMENTS REQUIRED	APPLICABLE TO PART NO *
303	MATERIAL MILL TEST REPORT	-
325	MATERIAL SELLER CERT	-
326	SPECIAL MATERIAL INSPECTION REPORT	-
205	MANUFACTURING, INSPECTION, AND TEST PLAN	-
312	FIELD INSPECTION AND TEST PLAN	-
321	WELD AND BRAZE INSPECTION REPORT	-
322	HEAT TREAT REPORT (W/CHART)	-
310	LEAK TEST REPORT	-
315	CLEANING CERT	-
318	DEVIATION REQUEST	-
319	NONCONFORMANCE PROCESS	-
323	DIMENSIONAL REPORT	-
330	FUNCTIONAL TEST REPORT	-
:	:	:
:	:	:
:	:	:
:	:	:
:	:	:
100	DOCUMENTATION	-

* SYMBOL X INDICATES APPLICABLE TO ALL PARTS OR ITEMS

QA REP ..... DATE .....

RPE

REV. XX DATE XX/XX/XX

APPROXIMATE WEIGHT: 1,329 LBS.

PRELIMINARY

NO REPRESENTATION OR WARRANTY,EXPRESSED OR IMPLIED,IS MADE AS TO THE ACCURACY, COMPLETENESS OR USEFULNESS OF THE INFORMATION OR STATEMENTS CONTAINED IN THESE DRAWINGS, OR THAT THE USE OR DISCLOSURE OF ANY INFORMATION, APPARATUS, METHOD OR PROCESS DISCLOSED IN THESE DRAWINGS MAY NOT INFRINGE PRIVATE RIGHTS OF OTHERS. NO LIABILITY IS ASSUMED WITH RESPECT TO THE USE OF, OR FOR DAMAGES RESULTING FROM THE USE OF, ANY INFORMATION, APPARATUS, METHOD OR PROCESS DISCLOSED IN THESE DRAWINGS. DRAWINGS MADE AVAILABLE FOR INFORMATION TO BIDDER ARE NOT TO BE USED FOR OTHER PURPOSES, AND ARE TO BE RETURNED UPON REQUEST OF THE FORWARDING CONTRACTOR.

P THIS DRAWING PRODUCED ON PRO-ENGINEER

THIS DOCUMENT CONTROLLED BY
CHANGE CONTROL SYSTEM 3
ENGINEERING PROCEDURE SNS-TS-G001

REV	CHANGE TYPE	CHANGE CONTROL SYSTEM	CHANGE REQUEST NUMBER	DESCRIPTION	BY	CHK	SECT	DEPT	DATE	PE	REQ	DOE	PJ
00A	—	3	—	ISSUE FOR COMMENT AND INFORMATION	SMR				11/01				

REVISION OR ISSUE PURPOSE — REVISION APPROVALS

SCALE AS NOTED

TOLERANCES UNLESS OTHERWISE SPECIFIED
FRACTIONS :
XX DECIMALS ±.01
XXX DECIMALS ±.005
ANGLES ±0°15'
BREAK SHARP EDGES .06 MAX
FINISH 125 RMS UNLESS OTHERWISE SPECIFIED

DES	DMW/MEP	11/01
DRW	M.E.PHILLIPS	11/01
CHK	:	:
L3	:	:
L2	:	:
:	T.E. FORNEK	11/01
:	:	:
:	:	:
:	:	:
:	:	:
:	:	:
:	:	:

DRAWING APPROVALS — DATE

ornl Oak Ridge National Laboratory
operated for the DEPARTMENT OF ENERGY under U.S. GOVERNMENT contract DE-AC-05-84OR21400
Oak Ridge, Tennessee

SNS Spallation Neutron Source

SPALLATION NEUTRON SOURCE PROJECT
SINGLE CORE VESSEL INSERT
SINGLE C V PLUG WELDMENT

BLDG	FL	SHT	OF	CLASS
8700	1ST	1	8	U

107030600M8E8700A121 REV 00A

NEXT ASS'Y:

FINAL ASS'Y:

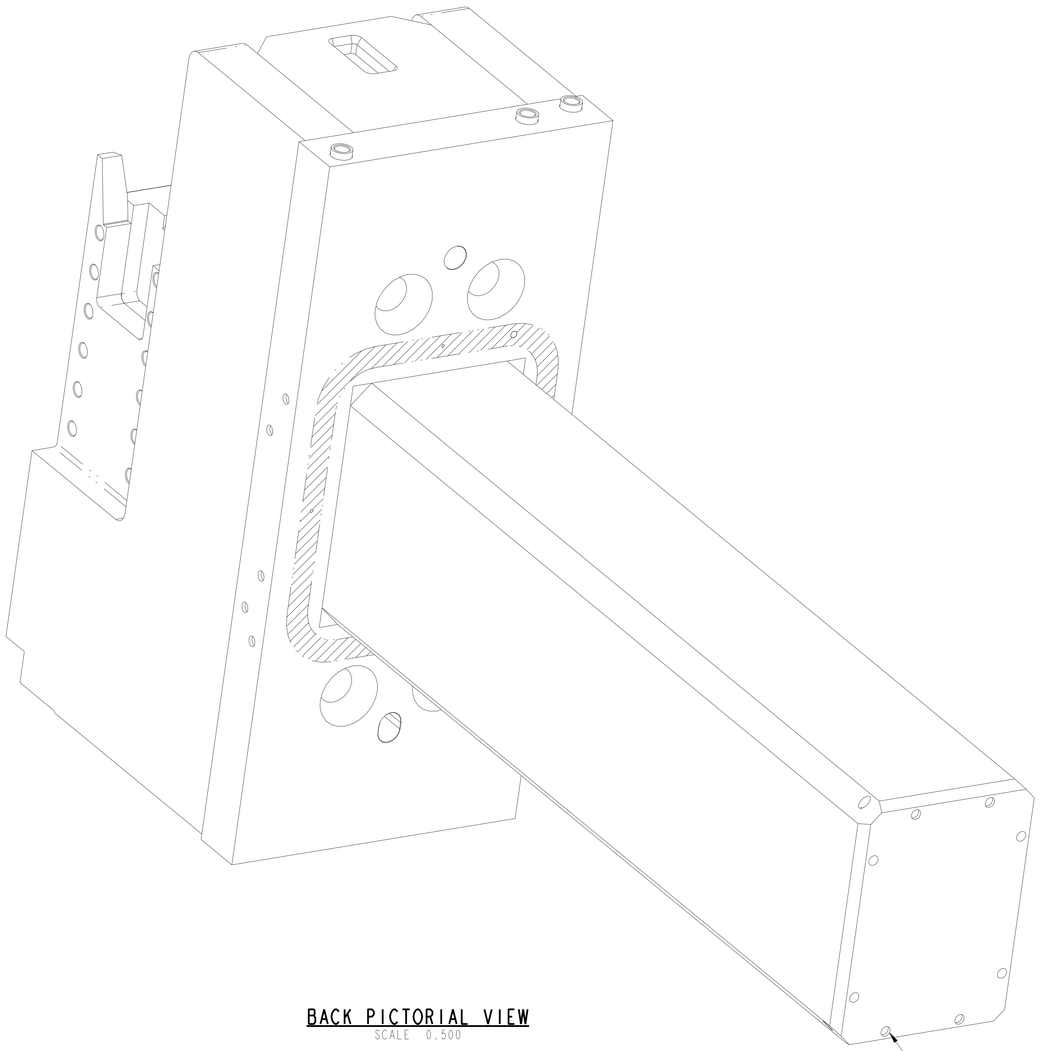

BACK PICTORIAL VIEW
SCALE 0.500

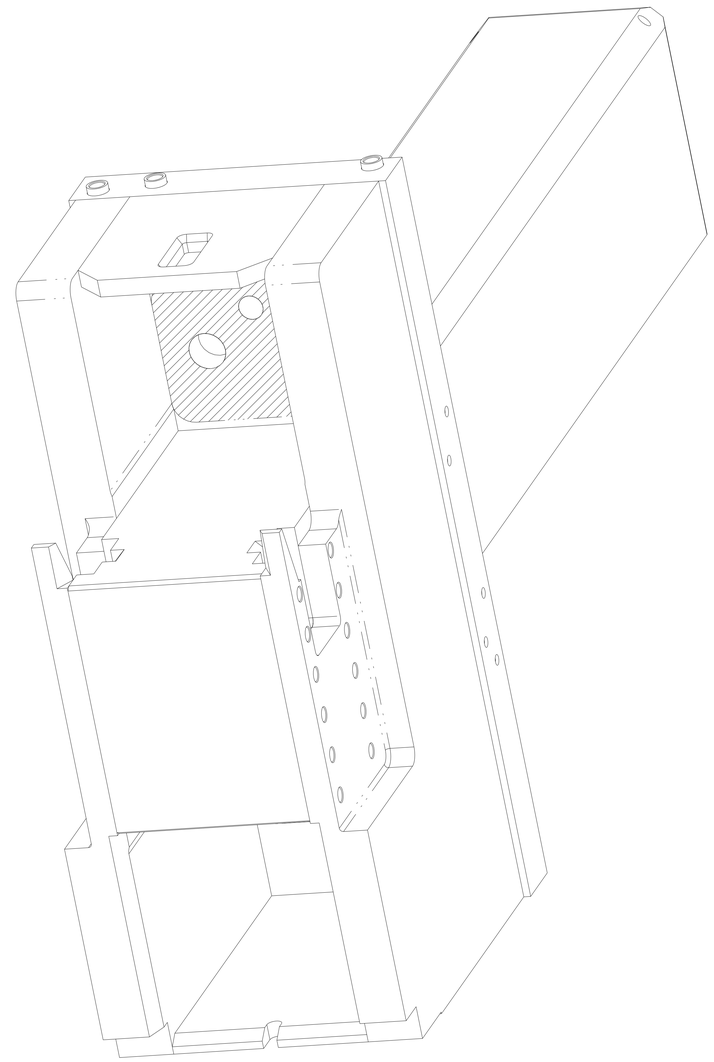

FRONT PICTORIAL VIEW
SCALE 0.500

NO REPRESENTATION OR WARRANTY,EXPRESSED OR IMPLIED,IS MADE AS TO THE ACCURACY, COMPLETENESS OR USEFULNESS OF THE INFORMATION OR STATEMENTS CONTAINED IN THESE DRAWINGS, OR THAT THE USE OR DISCLOSURE OF ANY INFORMATION, APPARATUS, METHOD OR PROCESS DISCLOSED IN THESE DRAWINGS MAY NOT INFRINGE PRIVATE RIGHTS OF OTHERS. NO LIABILITY IS ASSUMED WITH RESPECT TO THE USE OF, OR FOR DAMAGES RESULTING FROM THE USE OF, ANY INFORMATION, APPARATUS, METHOD OR PROCESS DISCLOSED IN THESE DRAWINGS. DRAWINGS MADE AVAILABLE FOR INFORMATION TO BIDDER ARE NOT TO BE USED FOR OTHER PURPOSES, AND ARE TO BE RETURNED UPON REQUEST OF THE FORWARDING CONTRACTOR.

P THIS DRAWING PRODUCED ON PRO-ENGINEER

PRELIMINARY

SCALE AS NOTED

TOLERANCES UNLESS OTHERWISE SPECIFIED

FRACTIONS	:
XX DECIMALS	±.01
XXX DECIMALS	±.005
ANGLES	±0°15'
BREAK SHARP EDGES	.06 MAX
FINISH	125 RMS UNLESS OTHERWISE SPECIFIED

ornl Oak Ridge National Laboratory
operated for the DEPARTMENT OF ENERGY under U.S. GOVERNMENT contract DE-AC05-00OR22725
Oak Ridge, Tennessee

SNS Spallation Neutron Source

SPALLATION NEUTRON SOURCE PROJECT
SINGLE CORE VESSEL INSERT
SINGLE C V PLUG WELDMENT

BLDG	TL	SHT	OF	CLASS
8700	1ST	2	8	U

107030600M8E8700A121

REV 00A

107030600M8E8700A121

NEXT ASS'Y:

FINAL ASS'Y:

NOTES

SEE SHEET 1 FOR NOTES AND MATERIAL LIST.

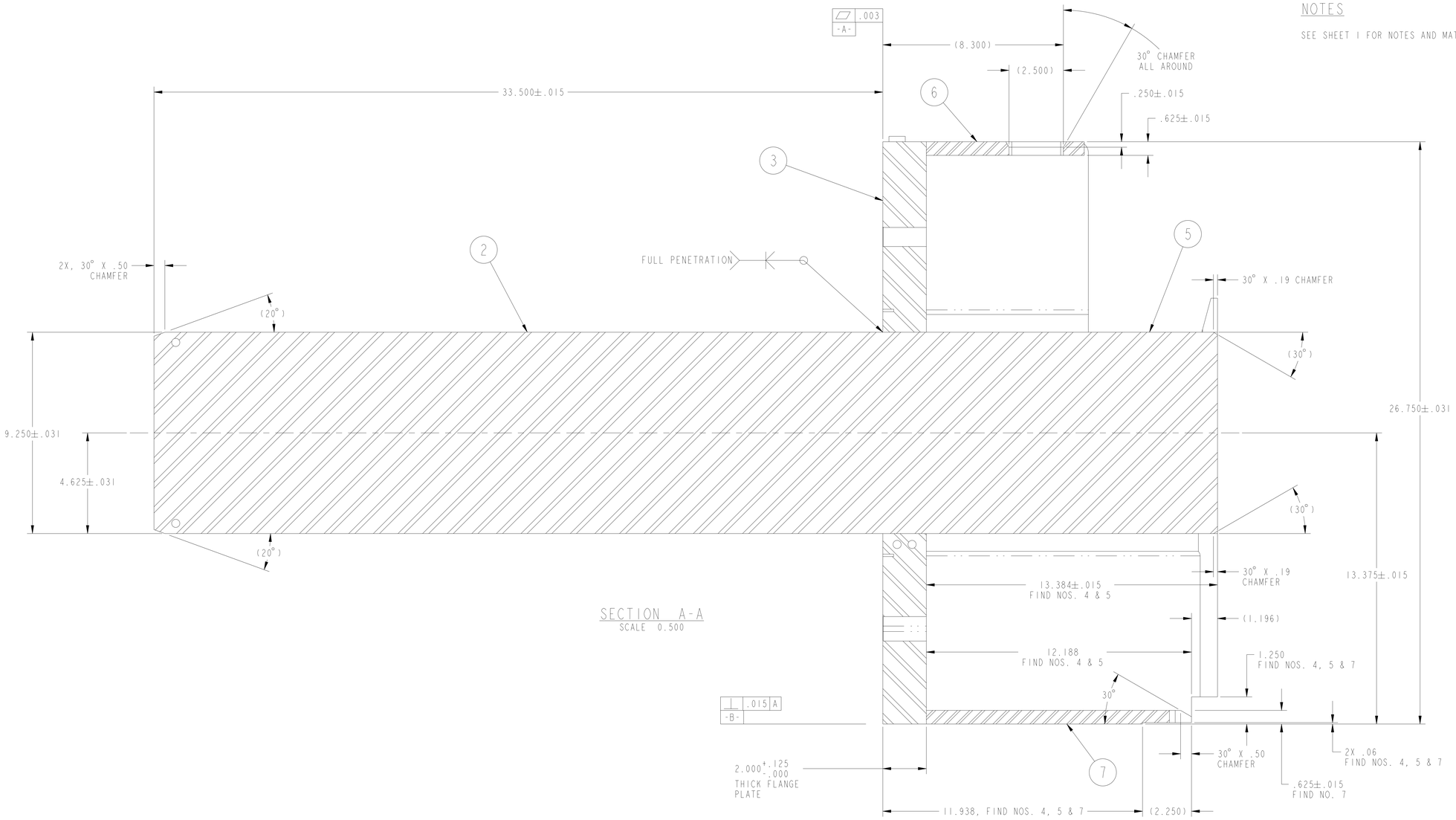

SECTION A-A
SCALE 0.500

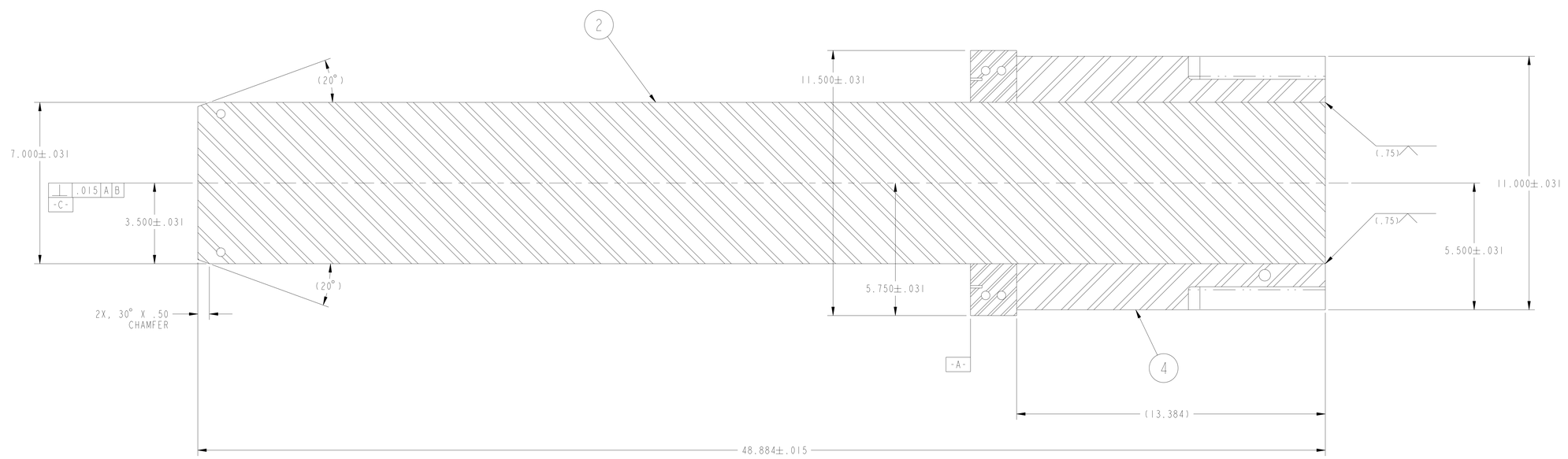

SECTION B-B
SCALE 0.500

NO REPRESENTATION OR WARRANTY,EXPRESSED OR IMPLIED,IS MADE AS TO THE ACCURACY, COMPLETENESS OR USEFULNESS OF THE INFORMATION OR STATEMENTS CONTAINED IN THESE DRAWINGS, OR THAT THE USE OR DISCLOSURE OF ANY INFORMATION, APPARATUS, METHOD OR PROCESS DISCLOSED IN THESE DRAWINGS MAY NOT INFRINGE PRIVATE RIGHTS OF OTHERS. NO LIABILITY IS ASSUMED WITH RESPECT TO THE USE OF, OR FOR DAMAGES RESULTING FROM THE USE OF, ANY INFORMATION, APPARATUS, METHOD OR PROCESS DISCLOSED IN THESE DRAWINGS. DRAWINGS MADE AVAILABLE FOR INFORMATION TO BIDDER ARE NOT TO BE USED FOR OTHER PURPOSES, AND ARE TO BE RETURNED UPON REQUEST OF THE FORWARDING CONTRACTOR.

P THIS DRAWING PRODUCED ON PRO-ENGINEER

PRELIMINARY

SCALE AS NOTED

TOLERANCES UNLESS OTHERWISE SPECIFIED

FRACTIONS :
XX DECIMALS ±.01
XXX DECIMALS ±.005
ANGLES ±0°15'
BREAK SHARP EDGES .06 MAX
FINISH 125 RMS UNLESS OTHERWISE SPECIFIED

ornl Oak Ridge National Laboratory
operated for the DEPARTMENT OF ENERGY under U.S. GOVERNMENT contract DE-AC05-00OR22725
Oak Ridge, Tennessee

SNS Spallation Neutron Source

SPALLATION NEUTRON SOURCE PROJECT
SINGLE CORE VESSEL INSERT
SINGLE C V PLUG WELDMENT

BLDG	FL	SHT	OF	CLASS
8700	1ST	3	8	U

I07030600M8E8700A121

REV. 00A

I07030600M8E8700A121

NOTES

SEE SHEET 1 FOR NOTES AND MATERIAL LIST.

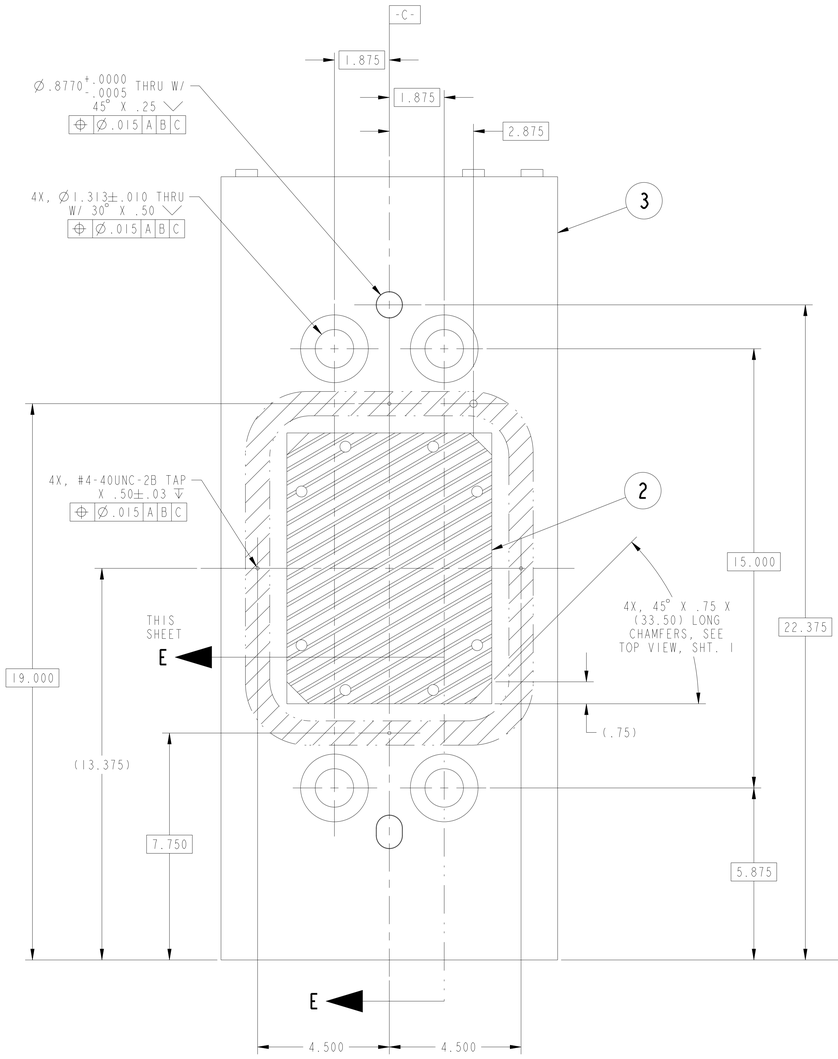

SECTION C-C
SCALE 0.500

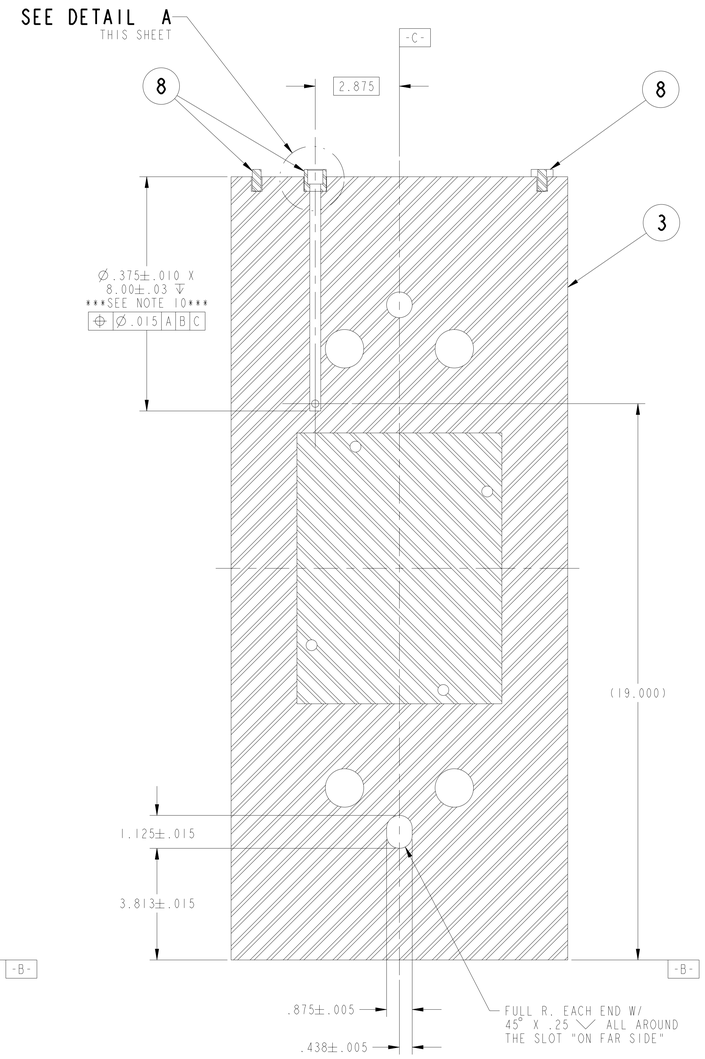

SECTION D-D
SCALE 0.500

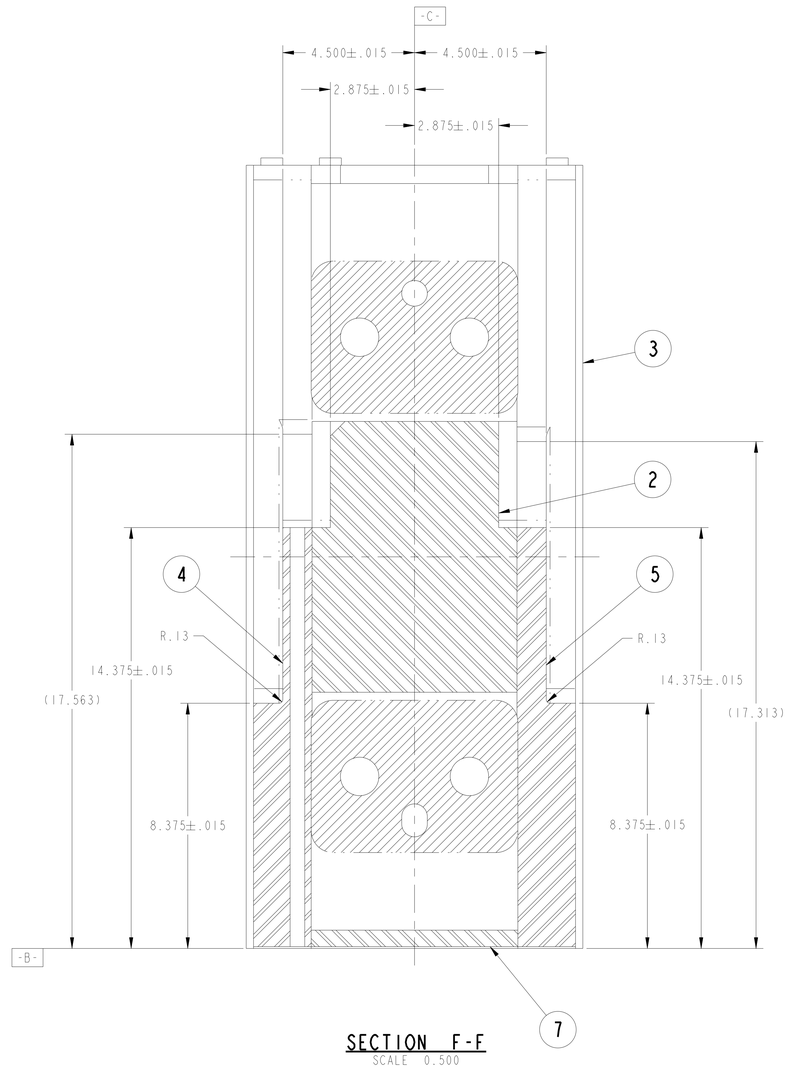

SECTION F-F
SCALE 0.500

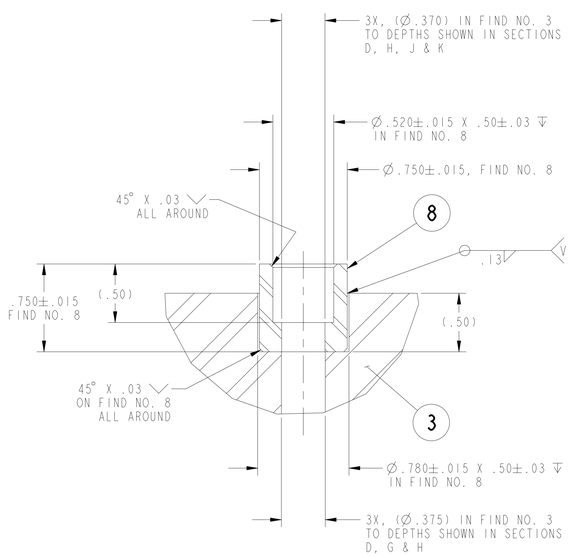

*** TYP. 3X FOR FIND NO. 8 ***
DETAIL A
SCALE 2.000

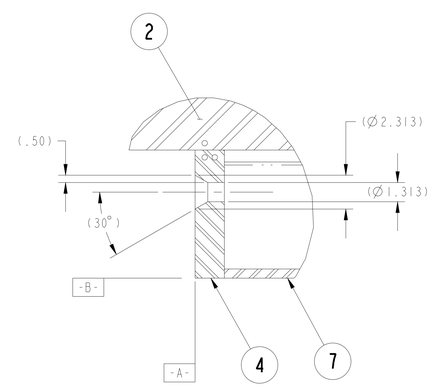

SECTION E-E
SCALE 0.250

PRELIMINARY

NO REPRESENTATION OR WARRANTY,EXPRESSED OR IMPLIED,IS MADE AS TO THE ACCURACY, COMPLETENESS OR USEFULNESS OF THE INFORMATION OR STATEMENTS CONTAINED IN THESE DRAWINGS, OR THAT THE USE OR DISCLOSURE OF ANY INFORMATION, APPARATUS, METHOD OR PROCESS DISCLOSED IN THESE DRAWINGS MAY NOT INFRINGE PRIVATE RIGHTS OF OTHERS. NO LIABILITY IS ASSUMED WITH RESPECT TO THE USE OF, OR FOR DAMAGES RESULTING FROM THE USE OF, ANY INFORMATION, APPARATUS, METHOD OR PROCESS DISCLOSED IN THESE DRAWINGS. DRAWINGS MADE AVAILABLE FOR INFORMATION TO BIDDER ARE NOT TO BE USED FOR OTHER PURPOSES, AND ARE TO BE RETURNED UPON REQUEST OF THE FORWARDING CONTRACTOR.

P THIS DRAWING PRODUCED ON PRO-ENGINEER

SCALE AS NOTED

TOLERANCES UNLESS OTHERWISE SPECIFIED
FRACTIONS :
XX DECIMALS ±.01
XXX DECIMALS ±.005
ANGLES ±0°15'
BREAK SHARP EDGES .06 MAX
FINISH 125 RMS UNLESS OTHERWISE SPECIFIED

ornl Oak Ridge National Laboratory
operated for the DEPARTMENT OF ENERGY under U.S. GOVERNMENT contract DE-AC05-00OR22725
Oak Ridge, Tennessee

SNS Spallation Neutron Source

SPALLATION NEUTRON SOURCE PROJECT
SINGLE CORE VESSEL INSERT
SINGLE C V PLUG WELDMENT

BLDG	FL	SHT	OF	CLASS
8700	IST	4	8	U

I07030600M8E8700A121

REV 00A

I07030600M8E8700A121

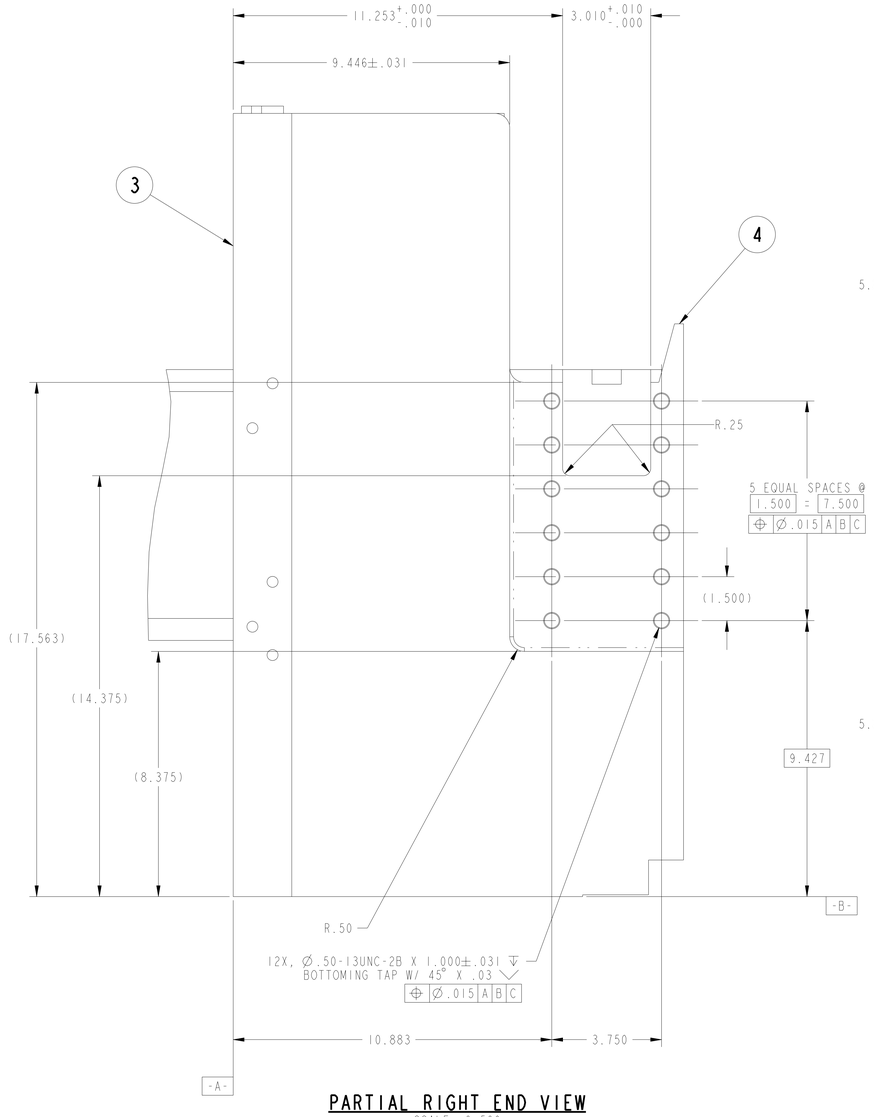

PARTIAL RIGHT END VIEW
SCALE 0.500

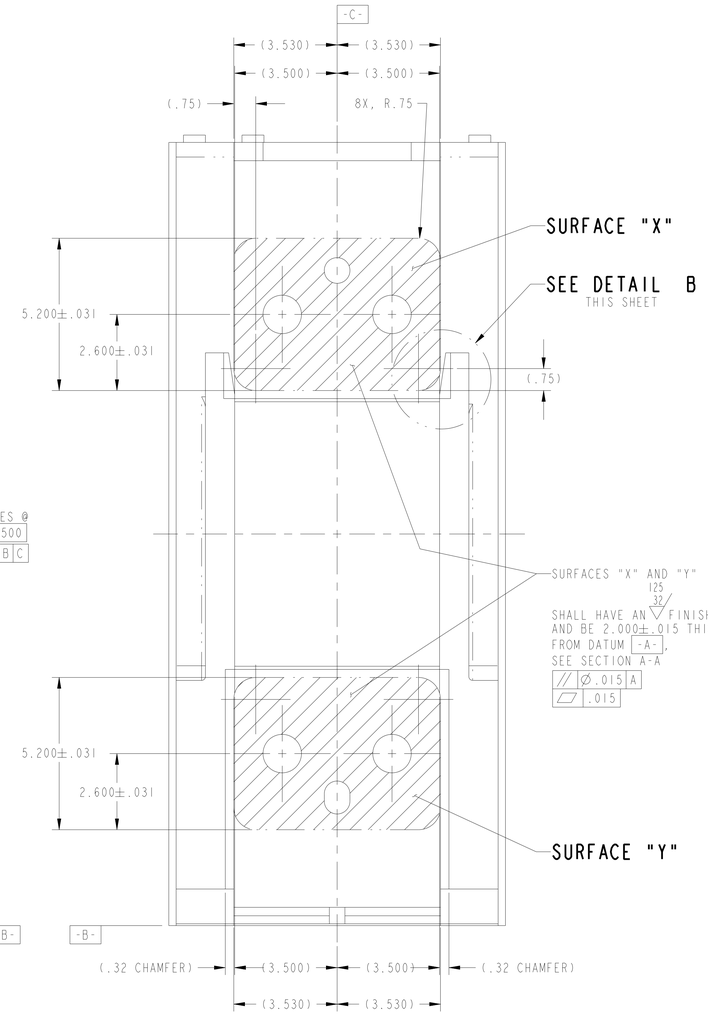

RIGHT END VIEW
SCALE 0.500

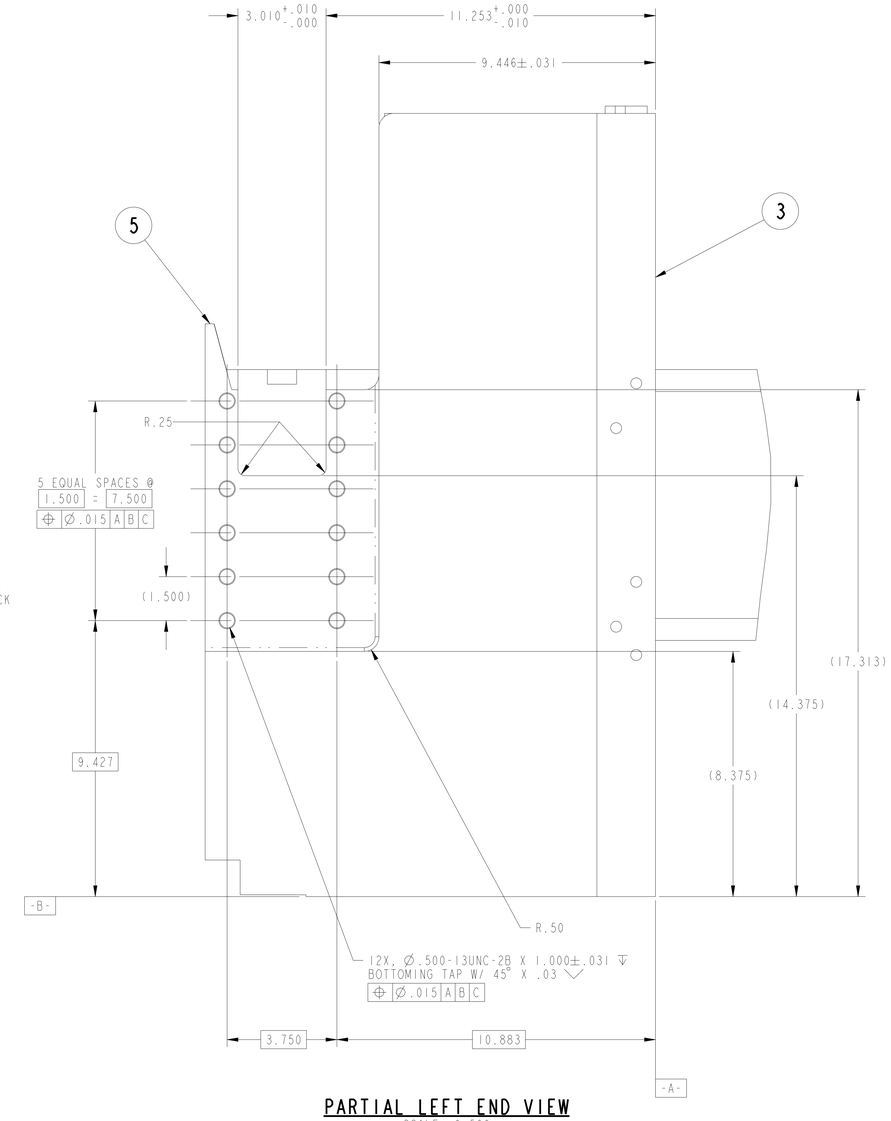

PARTIAL LEFT END VIEW
SCALE 0.500

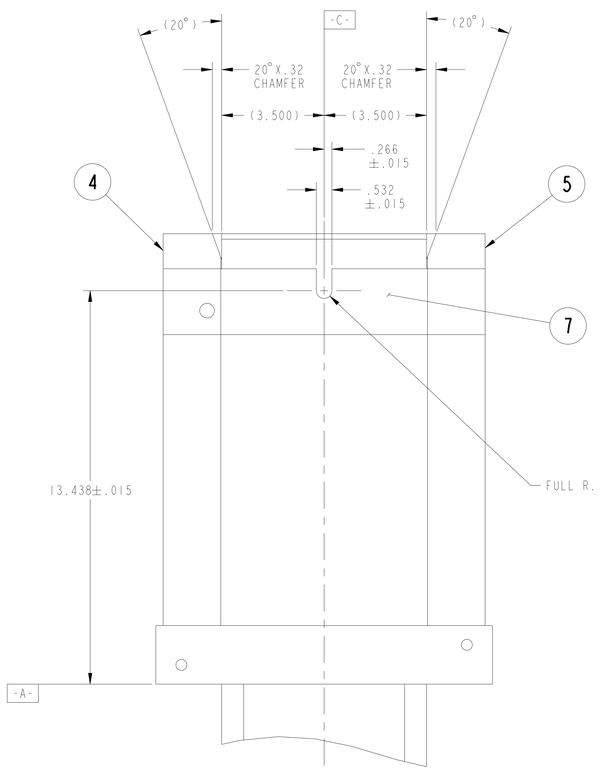

PARTIAL BOTTOM VIEW
SCALE 0.500

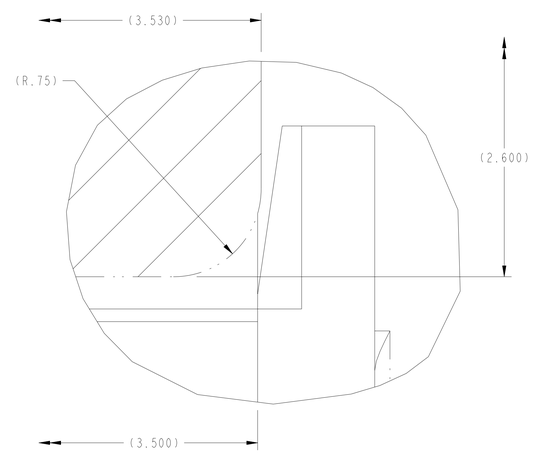

DETAIL B
SCALE 2.000

PRELIMINARY

NO REPRESENTATION OR WARRANTY,EXPRESSED OR IMPLIED,IS MADE AS TO THE ACCURACY, COMPLETENESS OR USEFULNESS OF THE INFORMATION OR STATEMENTS CONTAINED IN THESE DRAWINGS, OR THAT THE USE OR DISCLOSURE OF ANY INFORMATION, APPARATUS, METHOD OR PROCESS DISCLOSED IN THESE DRAWINGS MAY NOT INFRINGE PRIVATE RIGHTS OF OTHERS. NO LIABILITY IS ASSUMED WITH RESPECT TO THE USE OF, OR FOR DAMAGES RESULTING FROM THE USE OF, ANY INFORMATION, APPARATUS, METHOD OR PROCESS DISCLOSED IN THESE DRAWINGS. DRAWINGS MADE AVAILABLE FOR INFORMATION TO BIDDER ARE NOT TO BE USED FOR OTHER PURPOSES, AND ARE TO BE RETURNED UPON REQUEST OF THE FORWARDING CONTRACTOR.

P THIS DRAWING PRODUCED ON PRO-ENGINEER

SCALE AS NOTED

TOLERANCES UNLESS OTHERWISE SPECIFIED
FRACTIONS ±
XX DECIMALS ±.01
XXX DECIMALS ±.005
ANGLES ±0°15'
BREAK SHARP EDGES .06 MAX
FINISH 125 RMS UNLESS OTHERWISE SPECIFIED

ornl Oak Ridge National Laboratory
operated for the DEPARTMENT OF ENERGY under U.S. GOVERNMENT contract DE-AC05-00OR22725
Oak Ridge, Tennessee

SNS Spallation Neutron Source

SPALLATION NEUTRON SOURCE PROJECT
SINGLE CORE VESSEL INSERT
SINGLE C V PLUG WELDMENT

BLDG	FL	SHT	OF	CLASS
8700	1ST	5	8	U

107030600M8E8700A121 REV 00A

107030600M8E8700A121

NEXT ASS'Y:

FINAL ASS'Y:

NOTES

SEE SHEET 1 FOR NOTES AND MATERIAL LIST.

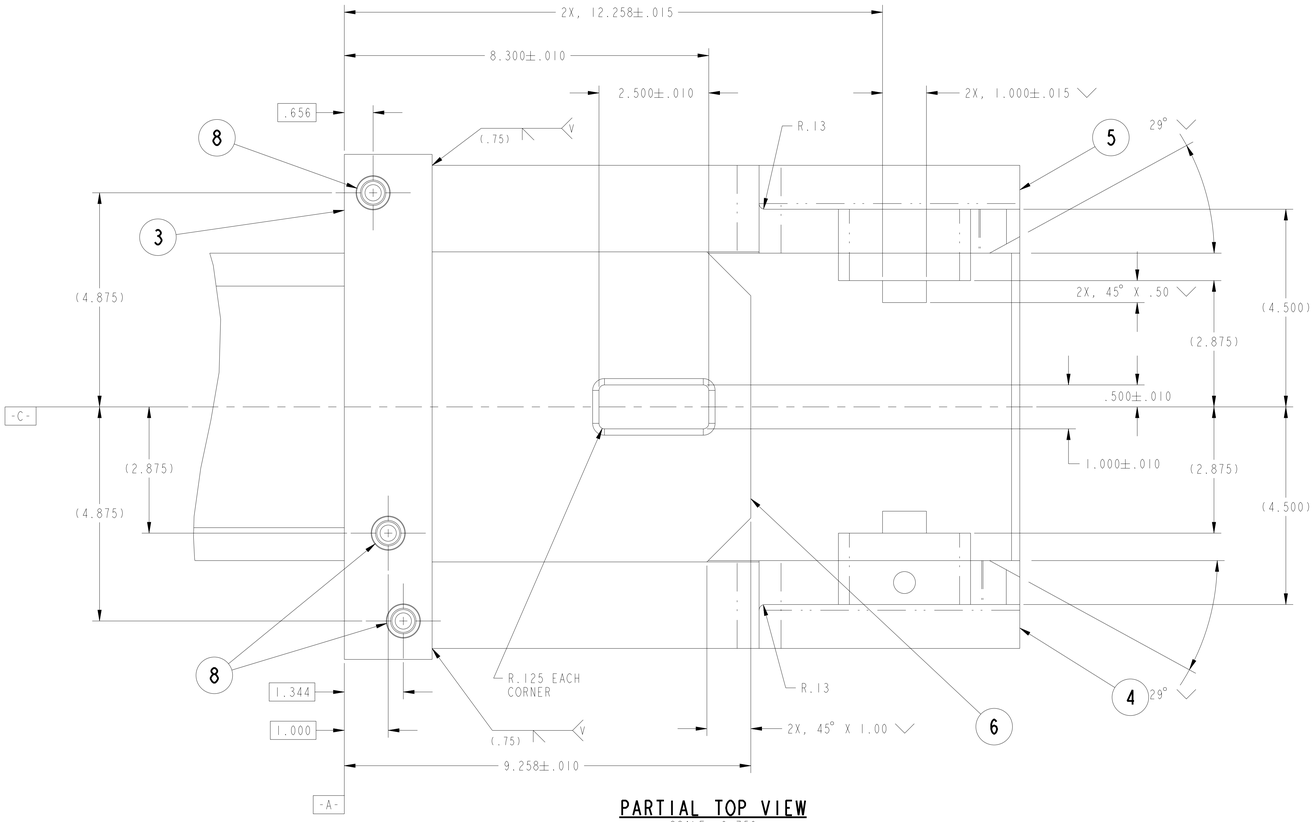

PARTIAL TOP VIEW
SCALE 0.750

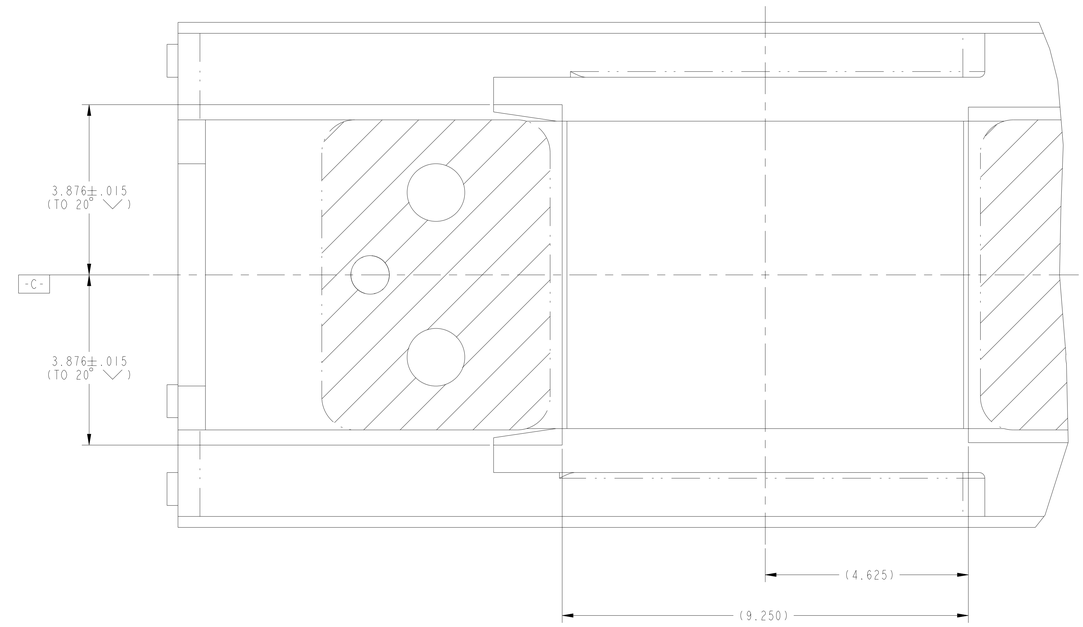

PARTIAL RIGHT END VIEW
SCALE 0.750

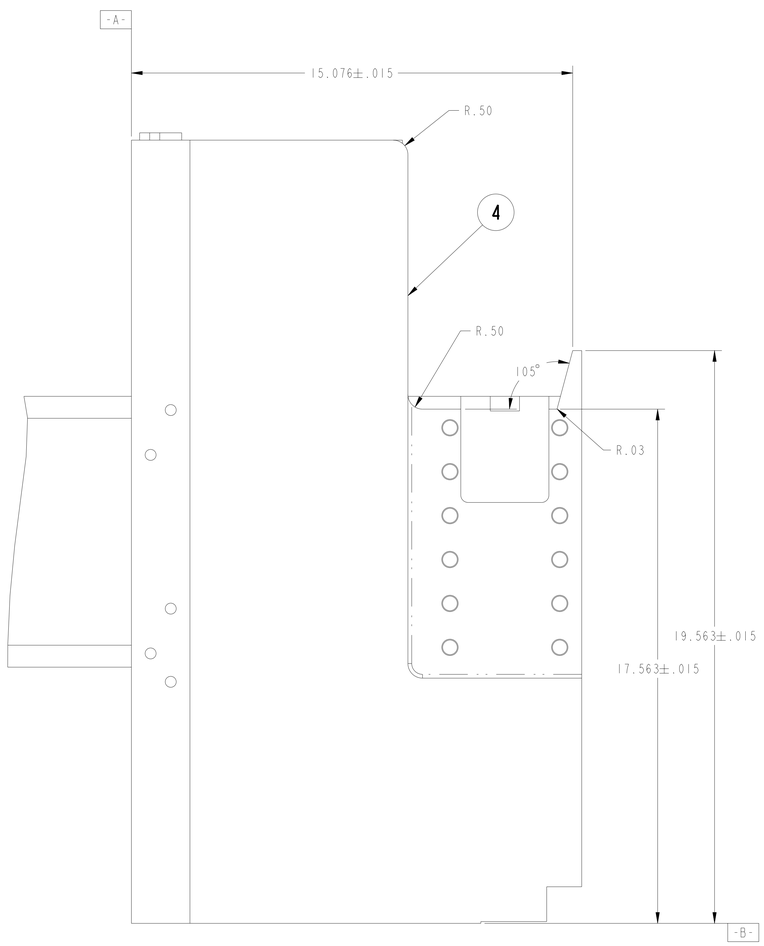

PARTIAL FRONT VIEW
SCALE 0.500

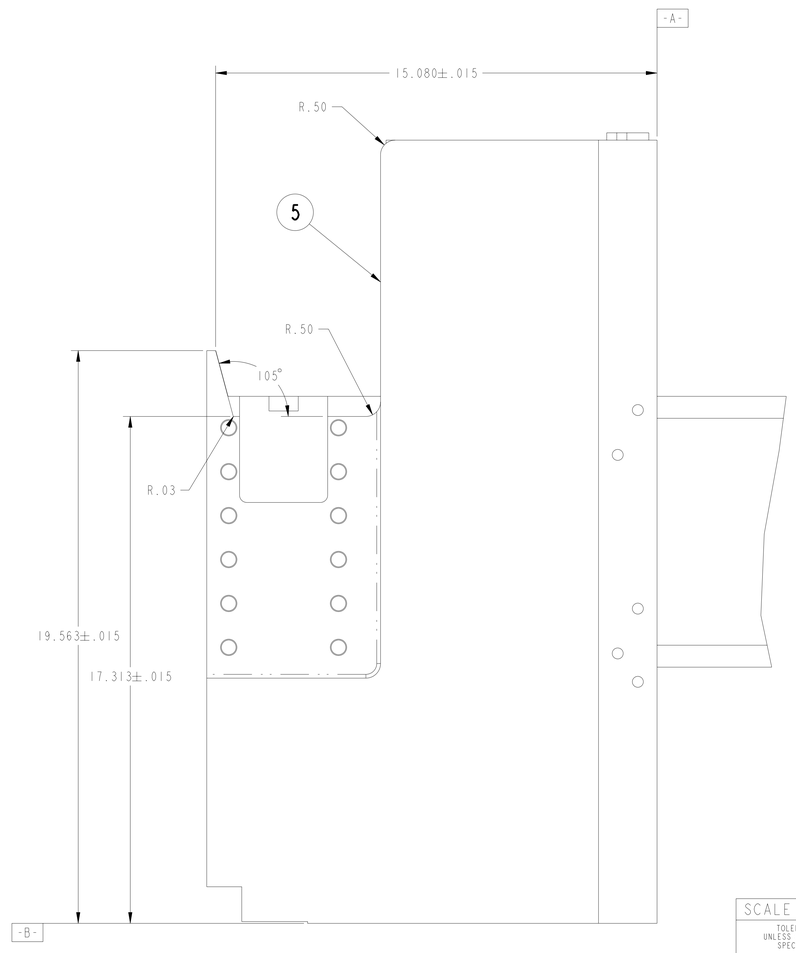

PARTIAL BACK VIEW
SCALE 0.500

PRELIMINARY

NO REPRESENTATION OR WARRANTY,EXPRESSED OR IMPLIED,IS MADE AS TO THE ACCURACY, COMPLETENESS OR USEFULNESS OF THE INFORMATION OR STATEMENTS CONTAINED IN THESE DRAWINGS, OR THAT THE USE OR DISCLOSURE OF ANY INFORMATION, APPARATUS, METHOD OR PROCESS DISCLOSED IN THESE DRAWINGS MAY NOT INFRINGE PRIVATE RIGHTS OF OTHERS. NO LIABILITY IS ASSUMED WITH RESPECT TO THE USE OF, OR FOR DAMAGES RESULTING FROM THE USE OF, ANY INFORMATION, APPARATUS, METHOD OR PROCESS DISCLOSED IN THESE DRAWINGS. DRAWINGS MADE AVAILABLE FOR INFORMATION TO BIDDER ARE NOT TO BE USED FOR OTHER PURPOSES, AND ARE TO BE RETURNED UPON REQUEST OF THE FORWARDING CONTRACTOR.

P THIS DRAWING PRODUCED ON PRO-ENGINEER

SCALE AS NOTED

TOLERANCES UNLESS OTHERWISE SPECIFIED

FRACTIONS :
XX DECIMALS ±.01
XXX DECIMALS ±.005
ANGLES ±0°15'
BREAK SHARP EDGES .06 MAX
FINISH 125 RMS UNLESS OTHERWISE SPECIFIED

ornl Oak Ridge National Laboratory
operated for the DEPARTMENT OF ENERGY under U.S. GOVERNMENT contract DE-AC05-00OR22725
Oak Ridge, Tennessee

SNS Spallation Neutron Source

SPALLATION NEUTRON SOURCE PROJECT
SINGLE CORE VESSEL INSERT
SINGLE C V PLUG WELDMENT

BLDG	FL	SHT	OF	CLASS
8700	1ST	6	8	U

I07030600M8E8700A121

REV 00A

I07030600M8E8700A121

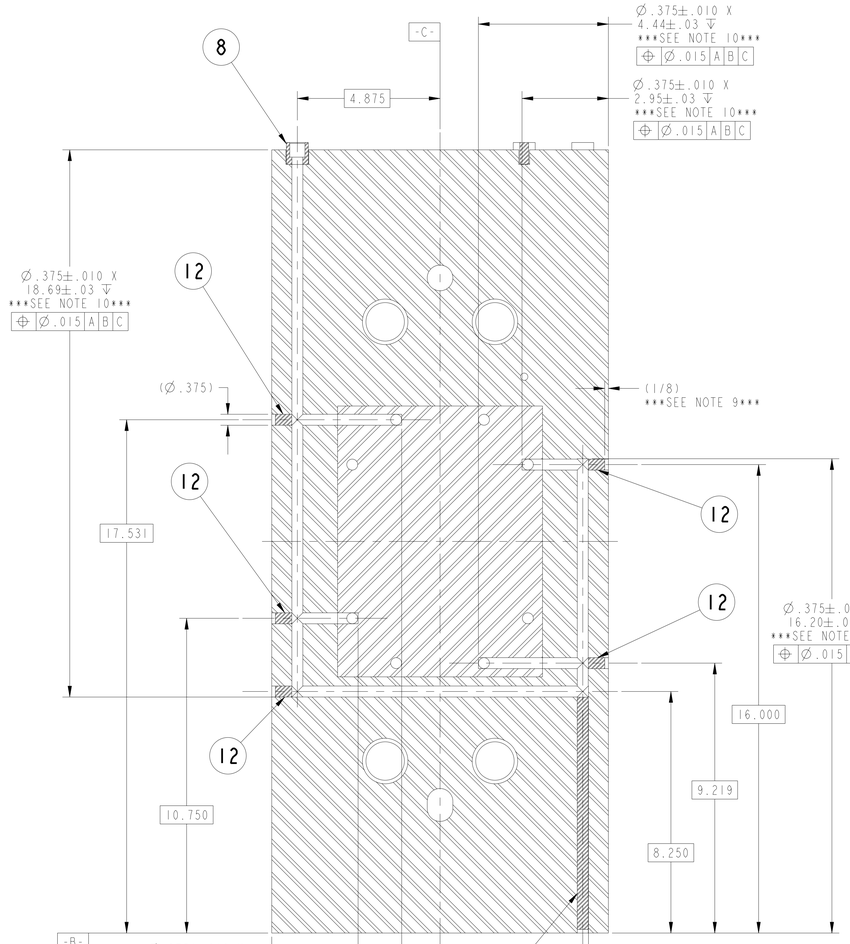

SECTION G-G
SCALE 0.500

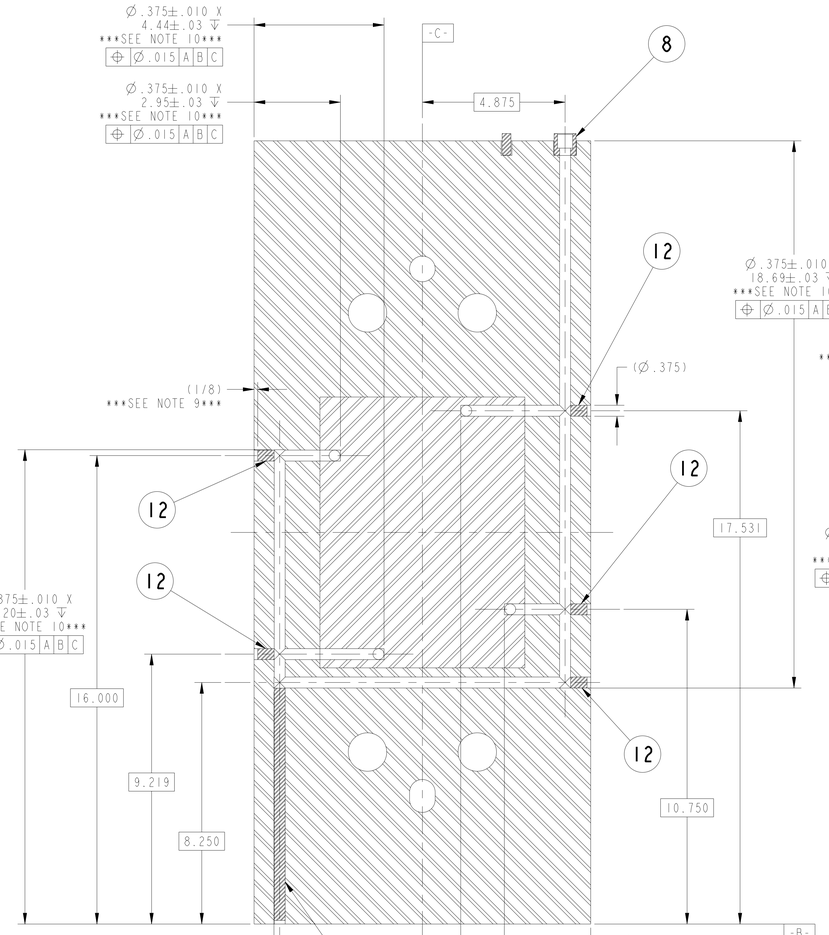

SECTION H-H
SCALE 0.500

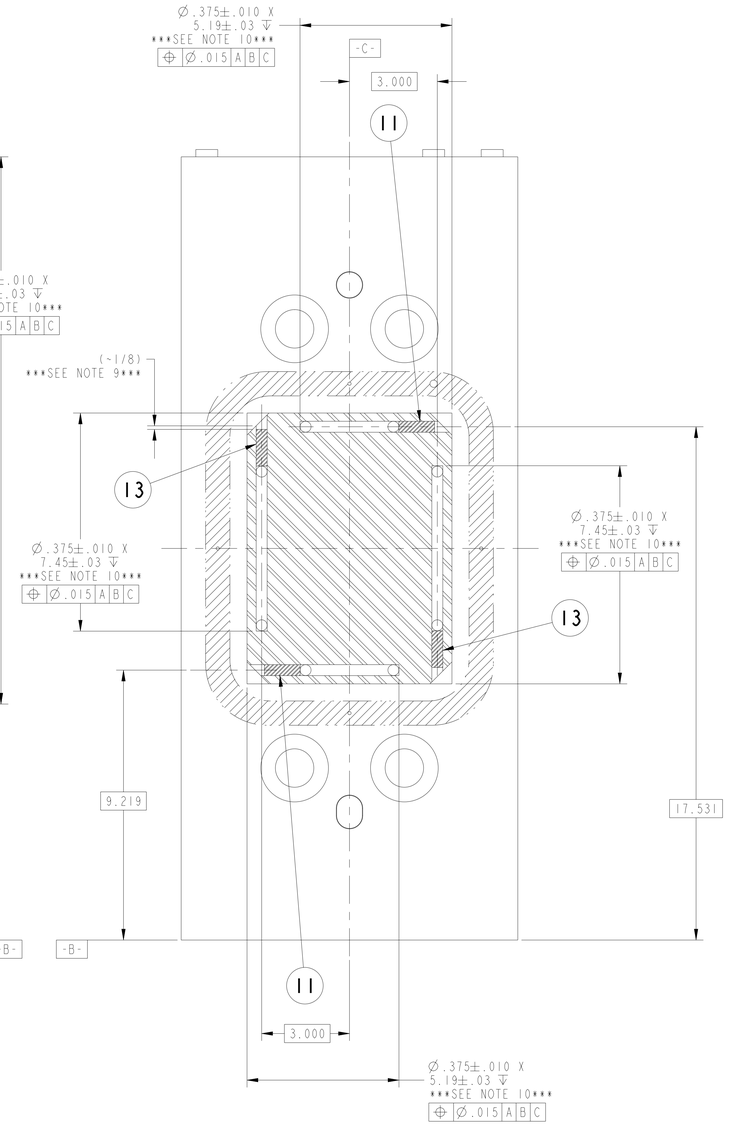

SECTION J-J
SCALE 0.500

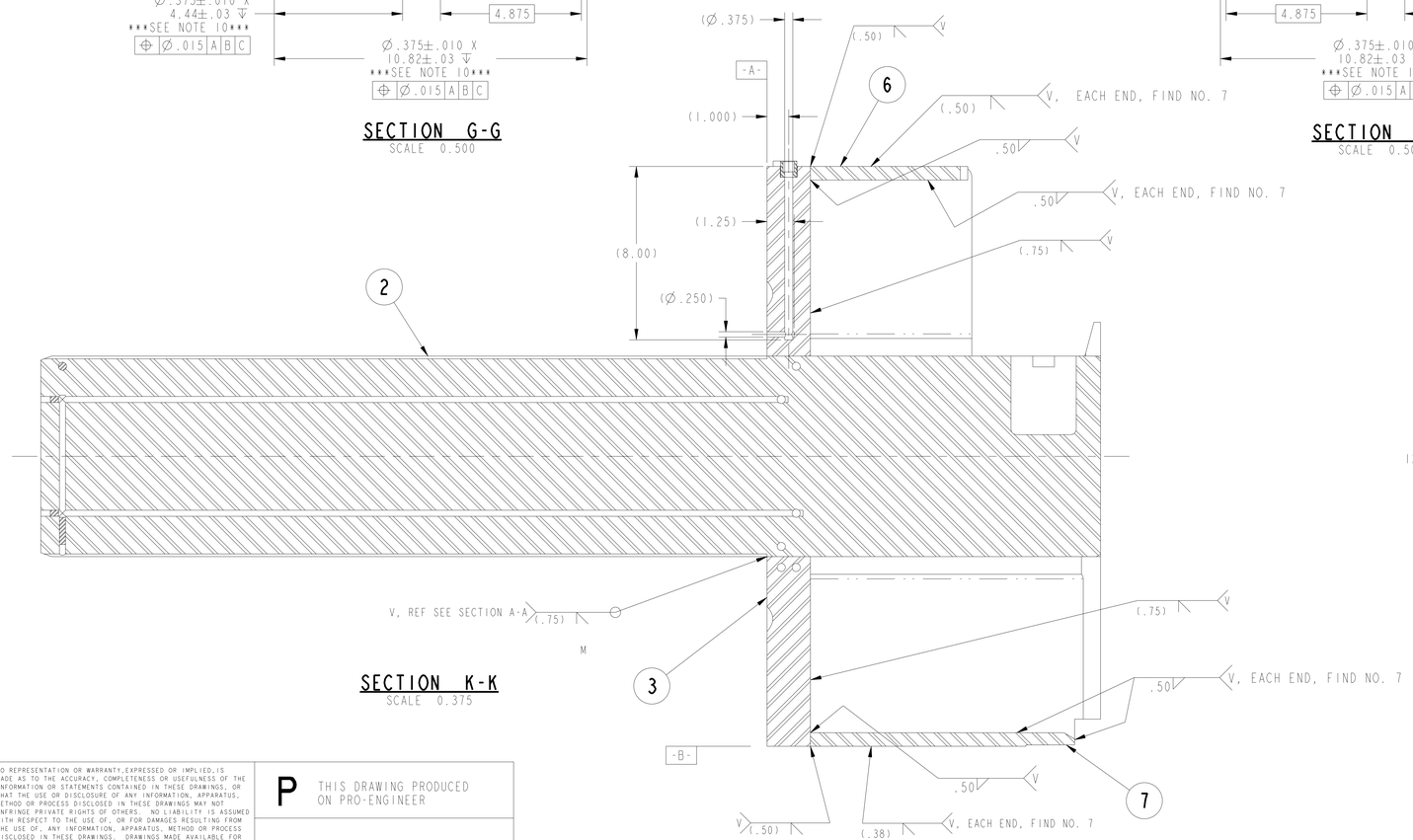

SECTION K-K
SCALE 0.375

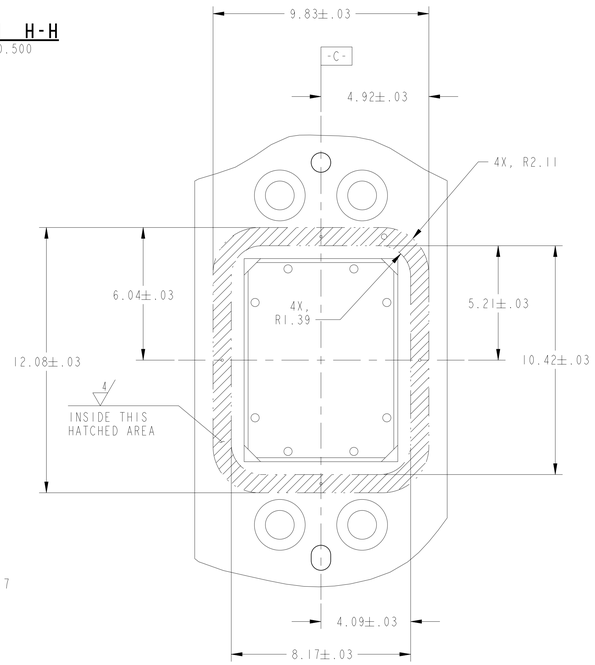

PARTIAL LEFT END VIEW
SCALE 0.375

PRELIMINARY

NO REPRESENTATION OR WARRANTY,EXPRESSED OR IMPLIED,IS MADE AS TO THE ACCURACY, COMPLETENESS OR USEFULNESS OF THE INFORMATION OR STATEMENTS CONTAINED IN THESE DRAWINGS, OR THAT THE USE OR DISCLOSURE OF ANY INFORMATION, APPARATUS, METHOD OR PROCESS DISCLOSED IN THESE DRAWINGS MAY NOT INFRINGE PRIVATE RIGHTS OF OTHERS. NO LIABILITY IS ASSUMED WITH RESPECT TO THE USE OF, OR FOR DAMAGES RESULTING FROM THE USE OF, ANY INFORMATION, APPARATUS, METHOD OR PROCESS DISCLOSED IN THESE DRAWINGS. DRAWINGS MADE AVAILABLE FOR INFORMATION TO BIDDER ARE NOT TO BE USED FOR OTHER PURPOSES, AND ARE TO BE RETURNED UPON REQUEST OF THE FORWARDING CONTRACTOR.

P THIS DRAWING PRODUCED ON PRO-ENGINEER

SCALE AS NOTED

TOLERANCES UNLESS OTHERWISE SPECIFIED
FRACTIONS :
XX DECIMALS ±.01
XXX DECIMALS ±.005
ANGLES ±0°15'
BREAK SHARP EDGES .06 MAX
FINISH 125 RMS UNLESS OTHERWISE SPECIFIED

ornl Oak Ridge National Laboratory
operated for the DEPARTMENT OF ENERGY under U.S. GOVERNMENT contract DE-AC05-00OR22725
Oak Ridge, Tennessee

SNS Spallation Neutron Source

SPALLATION NEUTRON SOURCE PROJECT
SINGLE CORE VESSEL INSERT
SINGLE C V PLUG WELDMENT

BLDG	FL	SHT	OF	CLASS
8700	1ST	7	8	U

I07030600M8E8700A121 REV 00A

I07030600M8E8700A121

NEXT ASS'Y:

FINAL ASS'Y:

NOTES

SEE SHEET 1 FOR NOTES AND MATERIAL LIST.

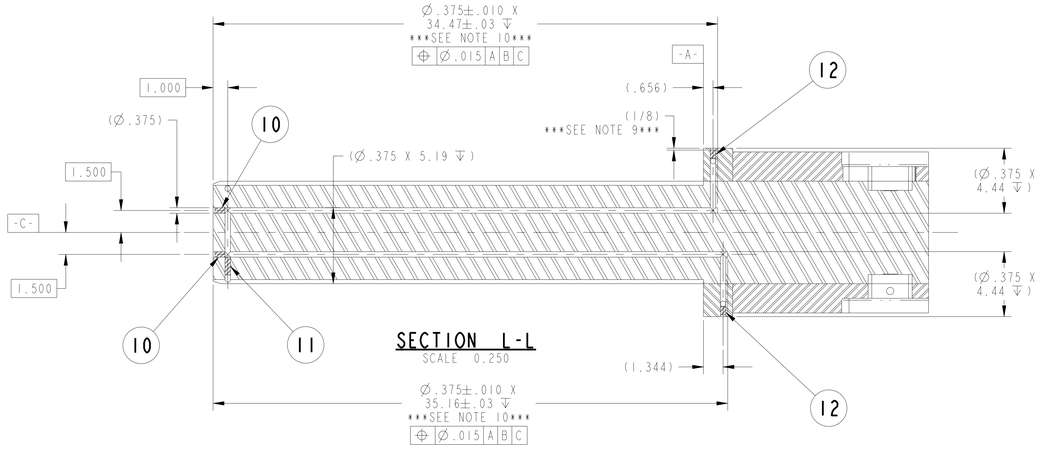

SECTION L-L
SCALE 0.250

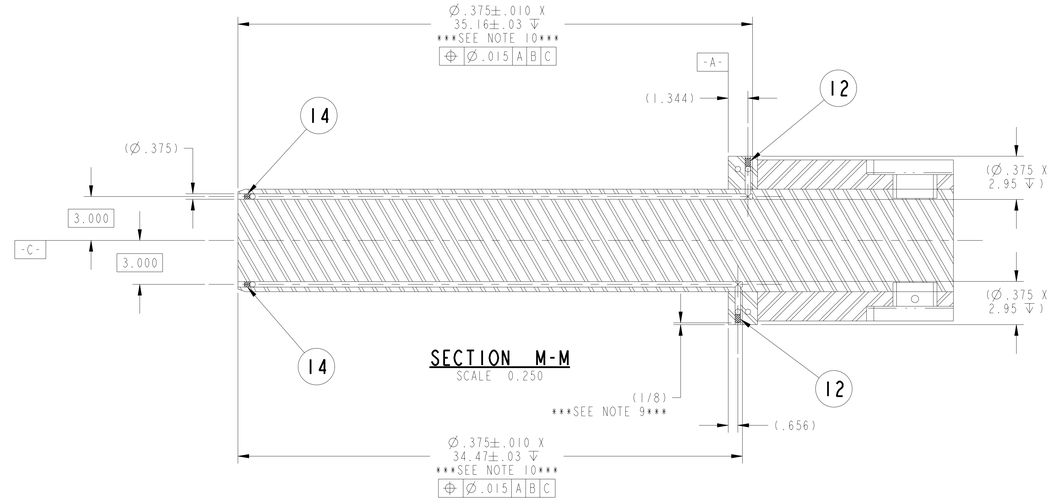

SECTION M-M
SCALE 0.250

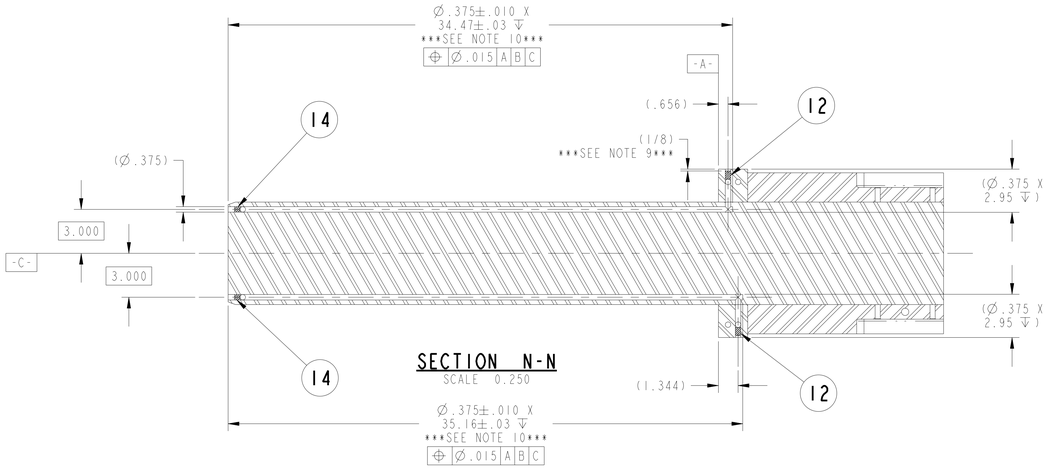

SECTION N-N
SCALE 0.250

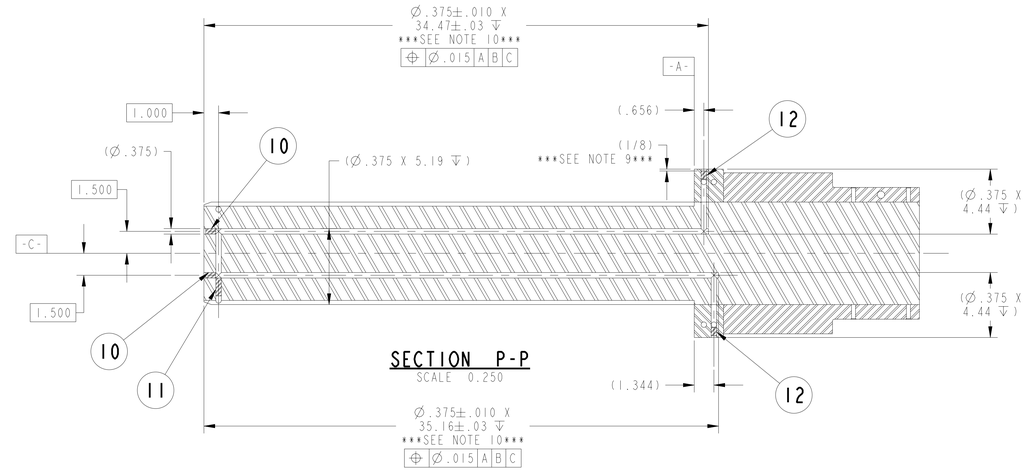

SECTION P-P
SCALE 0.250

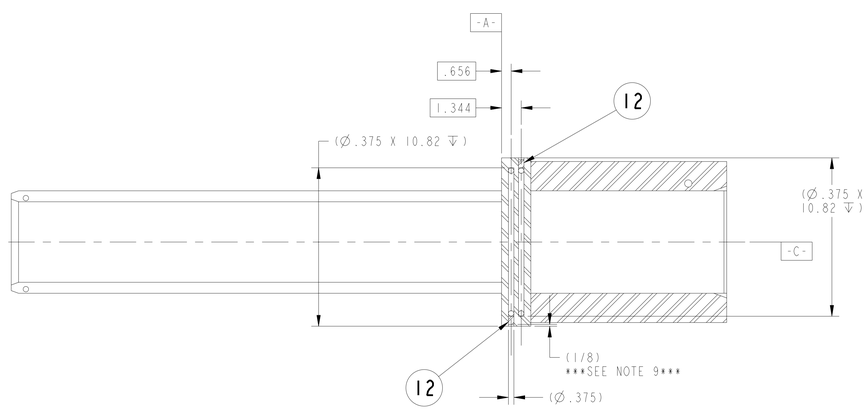

SECTION Q-Q
SCALE 0.250

PRELIMINARY

NO REPRESENTATION OR WARRANTY,EXPRESSED OR IMPLIED,IS MADE AS TO THE ACCURACY, COMPLETENESS OR USEFULNESS OF THE INFORMATION OR STATEMENTS CONTAINED IN THESE DRAWINGS, OR THAT THE USE OR DISCLOSURE OF ANY INFORMATION, APPARATUS, METHOD OR PROCESS DISCLOSED IN THESE DRAWINGS MAY NOT INFRINGE PRIVATE RIGHTS OF OTHERS. NO LIABILITY IS ASSUMED WITH RESPECT TO THE USE OF, OR FOR DAMAGES RESULTING FROM THE USE OF, ANY INFORMATION, APPARATUS, METHOD OR PROCESS DISCLOSED IN THESE DRAWINGS. DRAWINGS MADE AVAILABLE FOR INFORMATION TO BIDDER ARE NOT TO BE USED FOR OTHER PURPOSES, AND ARE TO BE RETURNED UPON REQUEST OF THE FORWARDING CONTRACTOR.

P THIS DRAWING PRODUCED ON PRO-ENGINEER

SCALE AS NOTED

TOLERANCES UNLESS OTHERWISE SPECIFIED

FRACTIONS	±
XX DECIMALS	±.01
XXX DECIMALS	±.005
ANGLES	±0°15'
BREAK SHARP EDGES .06 MAX	
FINISH .125 RMS UNLESS OTHERWISE SPECIFIED	

ornl Oak Ridge National Laboratory
operated for the DEPARTMENT OF ENERGY under U.S. GOVERNMENT contract DE-AC05-00OR22725
Oak Ridge, Tennessee

SNS Spallation Neutron Source

SPALLATION NEUTRON SOURCE PROJECT
SINGLE CORE VESSEL INSERT
SINGLE C V PLUG WELDMENT

BLDG	FL	SHT	OF	CLASS
8700	1ST	8	8	U

107030600M8E8700A121 REV 00A

107030600M8E8700A121