NEXT ASS'Y: FINAL ASS'Y:

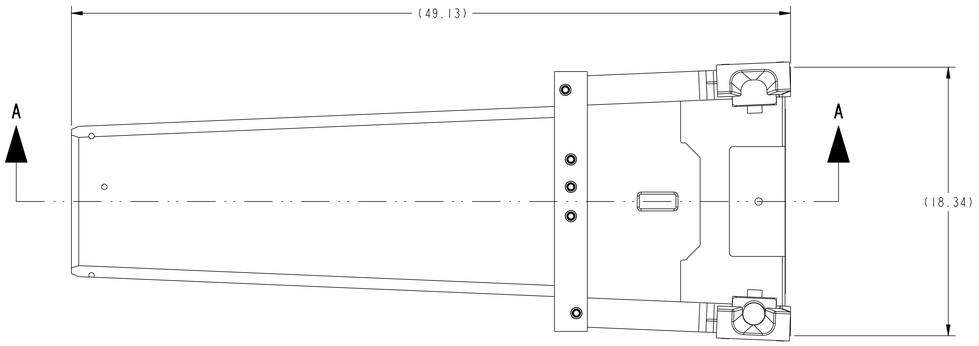

NOTES

1. INTERPRET DRAWING PER GLOBAL ENGINEERING DOCUMENTS DRAWING REQUIREMENTS MANUAL.
2. INTERPRET DIMENSIONS AND TOLERANCES PER ASME Y14.5M.
3. DIMENSIONS ARE IN INCHES.
4. LOW HEAD CAP SCREWS, FIND NO. 8, SHALL BE INSTALLED WITH LOCTITE, FIND NO. 9, IN ACCORDANCE WITH LOCTITE PROCEDURES AND TIGHTENED TO 35 IN.-LBS.
5. HELICOIL INSERTS, FIND NO. 7, SHALL BE INSTALLED PER HELICOIL SPECIFICATIONS.
6. UNBRAKO DIV/SPS TECHNOLOGIES, 4444 LEE RD. CLEVELAND OHIO 44128
7. HELICOIL INSERTS REPRESENTATIVE:
   EMHART FASTENING TEKNOLOGIES-INDUSTRIAL USA
   3703 ERIN BROOK DRIVE
   NEW PORT RICHEY, FL. 34655-2901
   (727)327-3678
8. LOCTITE CORPORATION, 1001 TROUT BROOK CROSSING, ROCK HILL, CT. 06067-3910.
9. TORQUE LOW HEAD CAP SCREWS, FIND NO. 8, PER NOTE 4. TORQUE SCREWS IN THE SEQUENCE SHOWN ON SHEET 2, IN THE LEFT & RIGHT END VIEWS.

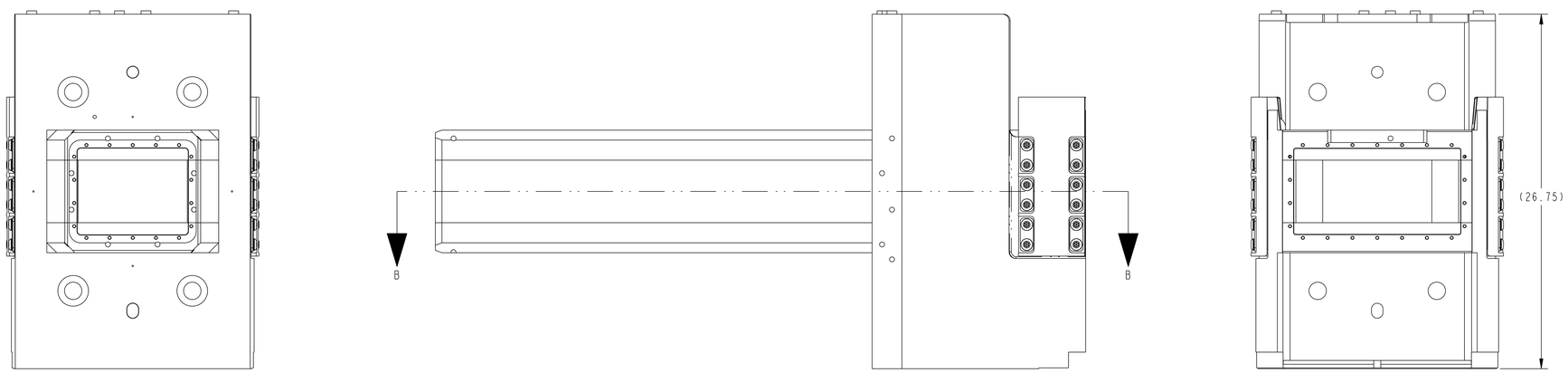

FRONT VIEW
SCALE 0.25

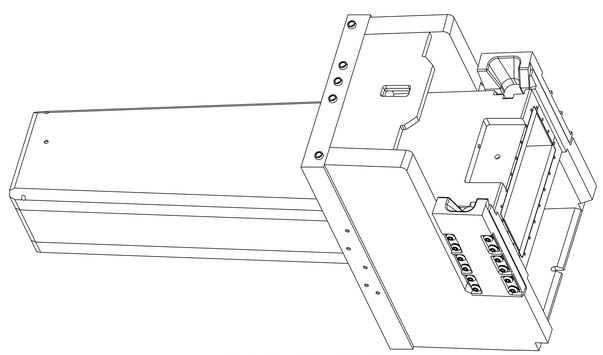

PICTORIAL VIEW
SCALE 0.19

			24		S300NA46CAM27835NNCE	BUTTON HEAD CAP SCREW	ALLOY STEEL	ASTM F835	11
			24		91074A133	PERMANENT TIGHT LOCK WASHER	STEEL	--	10
		8	1		271-LOCTITE	RETAINING COMPOUND	PURCHASED	---	9
4	6	9	12		107030600M8E8700A143-1	C.V.I. BACKING PLATE DETAIL	CARBON STEEL	ASTM A36	8
	5	7	1		107030600M8E8700A134-1	LEFT SIDE BALL GUIDE	STAINLESS STEEL	316L	7
			4		107030600M8E8700A133-1	BALL GUIDE SHIM	STAINLESS STEEL	316L	6
			1		107030600M8E8700A132-1	RIGHT SIDE BALL GUIDE	STAINLESS STEEL	316L	5
			2		107030600M8E8700A129-1	GUIDE LOWER SHIM	STAINLESS STEEL	316L	4
			1		107030600M8E8700A125-2	TOOLING BALL	STAINLESS STEEL	316L	3
			1		107030600M8E8700A110-1	MULTI C.V. INSERT WELDMENT	---	---	2
			1		107030600M8E8700A109-1	MULTI C.V. INSERT W/ WINDOW	---	---	1
107030600M8E8700A108		-1	CAGE CODE		PART OR IDENTIFYING NO	NOMENCLATURE OR DESCRIPTION	MATERIAL	SPECIFICATION	FIND NO
			NEXT ASSEMBLY			PARTS LIST			

QUALITY VERIFICATION
MECHANICAL AND STRUCTURAL
REFERENCE SNS-QA-G002

QV CLAUSE	DOCUMENTS REQUIRED	APPLICABLE TO PART NO *
303	MATERIAL MILL TEST REPORT	-
325	MATERIAL SELLER CERT	-
326	SPECIAL MATERIAL INSPECTION REPORT	-
205	MANUFACTURING, INSPECTION, AND TEST PLAN	-
312	FIELD INSPECTION AND TEST PLAN	-
321	WELD AND BRAZE INSPECTION REPORT	-
322	HEAT TREAT REPORT (MICHART)	-
310	LEAK TEST REPORT	-
315	CLEANING CERT	-
318	DEVIATION REQUEST	-
319	NONCONFORMANCE PROCESS	-
323	DIMENSIONAL REPORT	-
330	FUNCTIONAL TEST REPORT	-
:	:	:
:	:	:
:	:	:
:	:	:
:	:	:
100	DOCUMENTATION	-

* SYMBOL X INDICATES APPLICABLE TO ALL PARTS OR ITEMS

QA REP ..... DATE .....

RPE

REV. XX DATE XX/XX/XX

107030600M8E8700A109

PRELIMINARY

NO REPRESENTATION OR WARRANTY, EXPRESSED OR IMPLIED, IS MADE AS TO THE ACCURACY, COMPLETENESS OR USEFULNESS OF THE INFORMATION OR STATEMENTS CONTAINED IN THESE DRAWINGS, OR THAT THE USE OR DISCLOSURE OF ANY INFORMATION, APPARATUS, METHOD OR PROCESS DISCLOSED IN THESE DRAWINGS MAY NOT INFRINGE PRIVATE RIGHTS OF OTHERS. NO LIABILITY IS ASSUMED WITH RESPECT TO THE USE OF, OR FOR DAMAGES RESULTING FROM THE USE OF, ANY INFORMATION, APPARATUS, METHOD OR PROCESS DISCLOSED IN THESE DRAWINGS. DRAWINGS MADE AVAILABLE FOR INFORMATION TO BIDDER ARE NOT TO BE USED FOR OTHER PURPOSES, AND ARE TO BE RETURNED UPON REQUEST OF THE FORWARDING CONTRACTOR.

P THIS DRAWING PRODUCED ON PRO-ENGINEER

THIS DOCUMENT CONTROLLED BY
CHANGE CONTROL SYSTEM 3
ENGINEERING PROCEDURE SNS-TS-G001

REV	CHANGE TYPE	CHANGE CONTROL SYSTEM	CHANGE REQUEST NUMBER	DESCRIPTION	BY	CHK	SECT	DEPT	DATE	PE	REQ	OOE	PJ
ROB	—	3	—	ISSUE FOR COMMENT AND INFORMATION	SMR				11/01				

REVISION OR ISSUE PURPOSE — REVISION APPROVALS

SCALE AS NOTED

TOLERANCES UNLESS OTHERWISE SPECIFIED
FRACTIONS :
XX DECIMALS ±.01
XXX DECIMALS ±.005
ANGLES ±0°15'
BREAK SHARP EDGES .06 MAX
FINISH 125 RMS UNLESS OTHERWISE SPECIFIED

DES	DMW/MEP	11/01
DRW	M.E.PHILLIPS	11/01
CHK	:	:
L3	:	:
L2	:	:
:	T.E. FORNEK	11/01
:	:	:
:	:	:
:	:	:
:	:	:
:	:	:
:	:	:
:	:	:
DRAWING APPROVALS		DATE

ornl Oak Ridge National Laboratory
operated for the DEPARTMENT OF ENERGY under U.S. GOVERNMENT contract DE-AC-05-84OR21400
Oak Ridge, Tennessee

SNS Spallation Neutron Source

SPALLATION NEUTRON SOURCE PROJECT
MULTI CORE VESSEL INSERT
MULTI C.V. INSERT W/ WINDOW

BLDG	FL	SHT	OF	CLASS
8700	1ST	1	2	U

107030600M8E8700A109 — REV R0C

NOTES

1. INTERPRET DRAWING PER GLOBAL ENGINEERING DOCUMENTS DRAWING REQUIREMENTS MANUAL.
2. INTERPRET DIMENSIONS AND TOLERANCES PER ASME Y14.5M.
3. DIMENSIONS ARE IN INCHES.

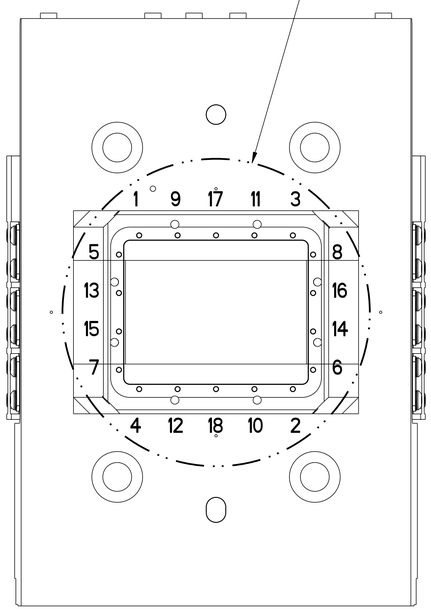

LEFT END VIEW
SCALE 0.375

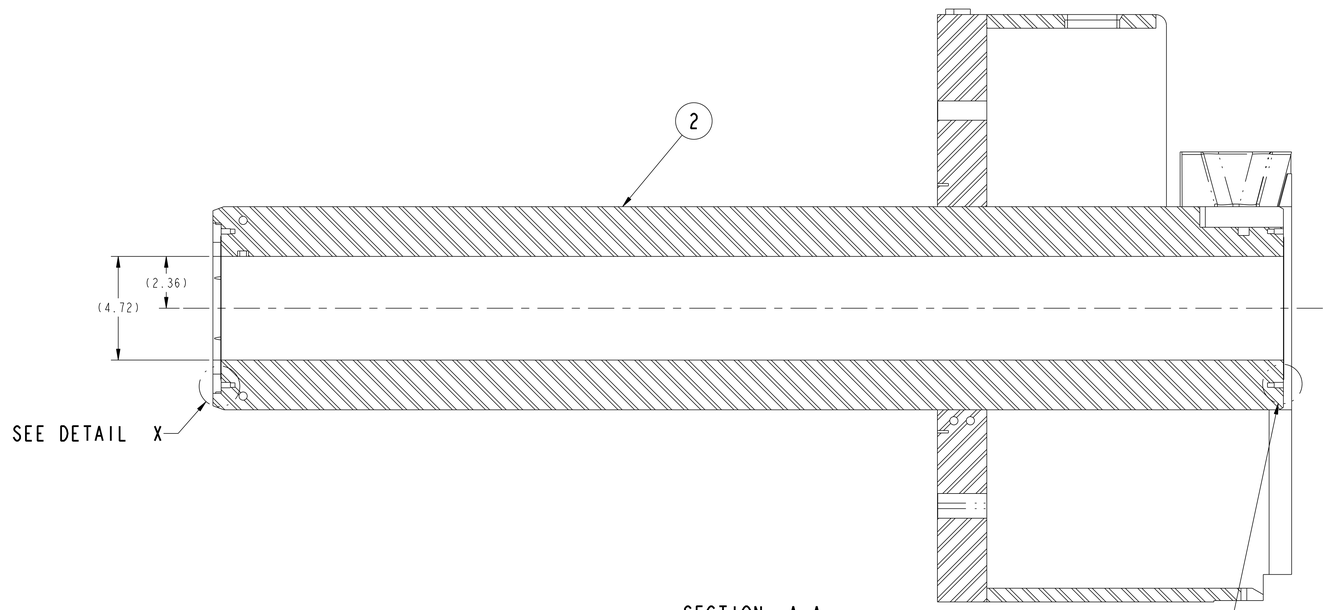

SECTION A-A
SCALE 0.375

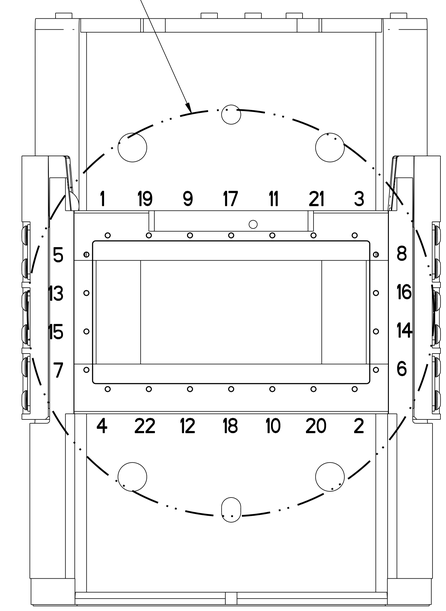

RIGHT END VIEW
SCALE 0.375

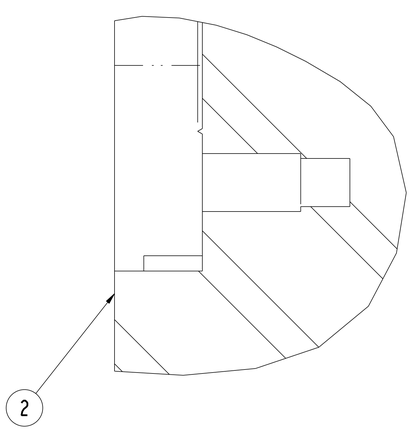

DETAIL X
SCALE 4.000

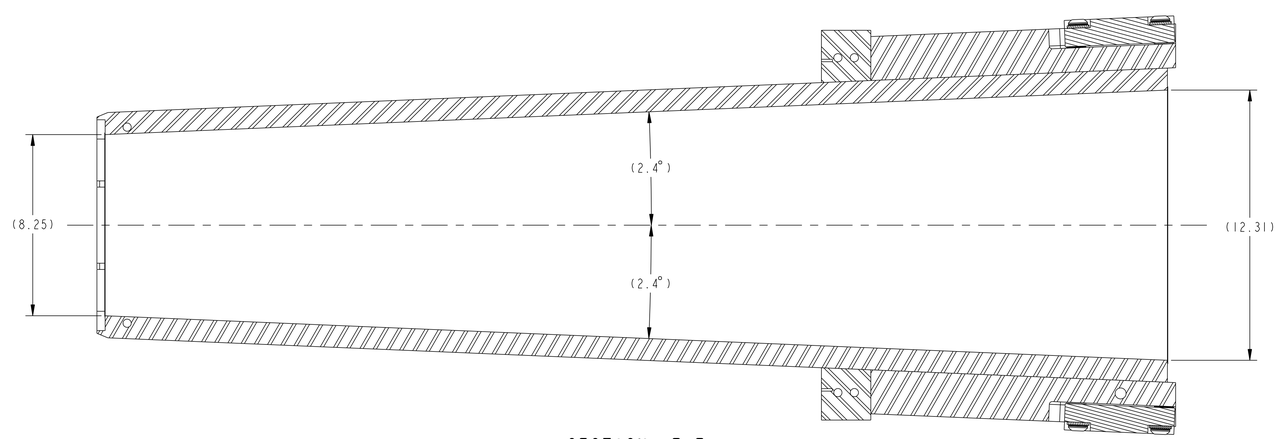

SECTION B-B
SCALE 0.375

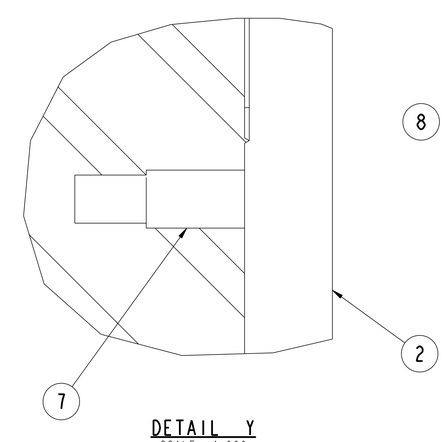

DETAIL Y
SCALE 4.000

PRELIMINARY

NO REPRESENTATION OR WARRANTY, EXPRESSED OR IMPLIED, IS MADE AS TO THE ACCURACY, COMPLETENESS OR USEFULNESS OF THE INFORMATION OR STATEMENTS CONTAINED IN THESE DRAWINGS, OR THAT THE USE OR DISCLOSURE OF ANY INFORMATION, APPARATUS, METHOD OR PROCESS DISCLOSED IN THESE DRAWINGS MAY NOT INFRINGE PRIVATE RIGHTS OF OTHERS. NO LIABILITY IS ASSUMED WITH RESPECT TO THE USE OF, OR FOR DAMAGES RESULTING FROM THE USE OF, ANY INFORMATION, APPARATUS, METHOD OR PROCESS DISCLOSED IN THESE DRAWINGS. DRAWINGS MADE AVAILABLE FOR INFORMATION TO BIDDER ARE NOT TO BE USED FOR OTHER PURPOSES, AND ARE TO BE RETURNED UPON REQUEST OF THE FORWARDING CONTRACTOR.

P THIS DRAWING PRODUCED ON PRO-ENGINEER

THIS DOCUMENT CONTROLLED BY
CHANGE CONTROL SYSTEM___XXXX___
ENGINEERING PROCEDURE___XXXX___

REV	CHANGE TYPE	CHANGE CONTROL SYSTEM	CHANGE REQUEST NUMBER	DESCRIPTION	BY	CHK	SECT	DEPT	DATE	PE	REQ	DOE
				REVISION OR ISSUE PURPOSE				REVISION APPROVALS				

SCALE AS NOTED

TOLERANCES UNLESS OTHERWISE SPECIFIED
FRACTIONS :
XX DECIMALS ±.01
XXX DECIMALS ±.005
ANGLES ±0°15'
BREAK SHARP EDGES .06 MAX
FINISH 125 RMS UNLESS OTHERWISE SPECIFIED

DES	DMW/MEP	11/01
DRW	M.E.PHILLIPS	11/01
CHK	:	:
L3	:	:
L2	:	:
:	:	:
:	:	:
:	:	:
:	:	:
:	:	:
:	:	:
:	:	:
DRAWING APPROVALS		DATE

ornl Oak Ridge National Laboratory
operated for the DEPARTMENT OF ENERGY under U.S. GOVERNMENT contract DE-AC-05-84OR21400
Oak Ridge, Tennessee

SNS Spallation Neutron Source

SPALLATION NEUTRON SOURCE PROJECT
MULTI CORE VESSEL INSERT
MULTI C.V. INSERT W/ WINDOW

BLDG	FL	SHT	OF	CLASS
8700	1ST	2	2	U

I07030600M8E8700A109 REV ROC

I07030600M8E8700A109