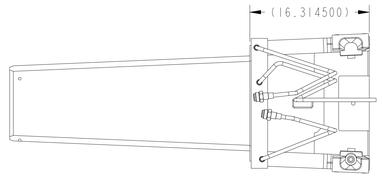

TOP VIEW
SCALE 0.125

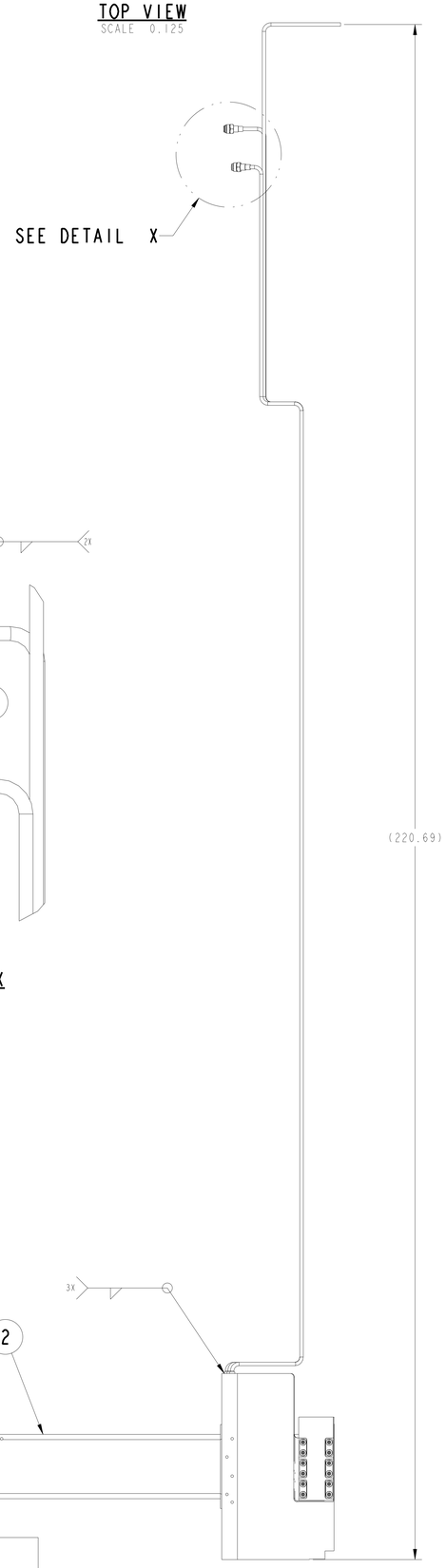

DETAIL X
SCALE 0.500

NOTES

1. INTERPRET DRAWING PER GLOBAL ENGINEERING DOCUMENTS DRAWING REQUIREMENTS MANUAL.
2. INTERPRET DIMENSIONS AND TOLERANCES PER ASME Y14.5M.
3. DIMENSIONS ARE IN INCHES.
4. INTERPRET WELDING AND NONDESTRUCTIVE EXAMINATION SYMBOLS PER AWS A2.4.
5. USE PROCEDURES, WELDERS, WELDING OPERATORS AND TACKERS QUALIFIED PER AWS B2.1.
6. ASSEMBLE MALE NUT, FIND NO. 8, TO REDUCING ADAPTER, FIND NO. 7, BEFORE WELDING REDUCING ADAPTER TO SOCKET WELD GLAND, FIND NO. 6.
7. SWAGELOK FITTINGS:
   RIDGE VALVE & FITTING CO.
   3919 PAPERMILL DRIVE
   KNOXVILLE, TENNESSEE 37909
   (865)588-2414

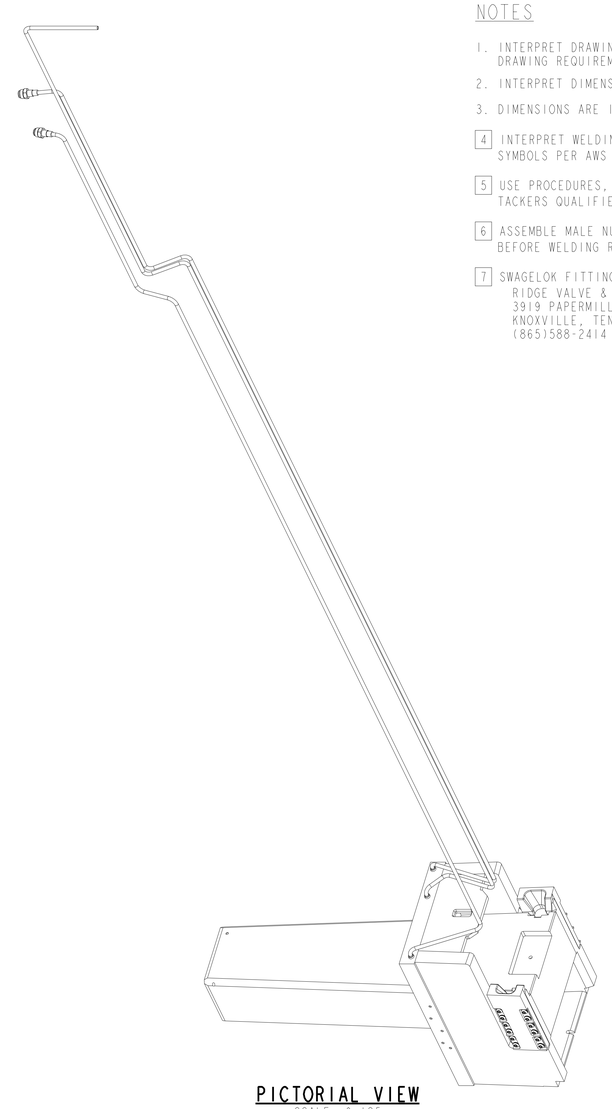

PICTORIAL VIEW
SCALE 0.125

			CAGE CODE	PART OR IDENTIFYING NO	NOMENCLATURE OR DESCRIPTION	MATERIAL	SPECIFICATION	FIND NO
6		2		SS-12-VCR-4	MALE NUT	STAINLESS STEEL	---	8
6		2		SS-12-VCR-3	SOCKET WELD GLAND	STAINLESS STEEL	---	7
6		2		SS-12-MTW-8-8TSW	REDUCING ADAPTER	STAINLESS STEEL	--	6
		1		107030600M8E8700A207-1	CONNECTING TUBE DETAIL	SEAMLESS 304 SST x 0.035" WALL	ASTM A269	5
		1		107030600M8E8700A206-1	CONNECTING TUBE DETAIL	SEAMLESS 304 SST x 0.035" WALL	ASTM A269	4
		1		107030600M8E8700A205-1	CONNECTING TUBE DETAIL	SEAMLESS 304 SST x 0.035" WALL	ASTM A269	3
		1		107030600M8E8700A103-1	MULTI C V INSR PLUG W/ALIGNMENTS	---	---	2
4	5	1		107030600M8E8700A101-1	LOWER MULTI C V INSR PLUG W/TUBING	---	---	1

107030600M8E8700A000 — 1

NEXT ASSEMBLY

PARTS LIST

QUALITY VERIFICATION
MECHANICAL AND STRUCTURAL
REFERENCE SNS-TS-Q002

QV CLAUSE	DOCUMENTS REQUIRED	APPLICABLE TO PART NO ▲
303	MATERIAL MILL TEST REPORT	-
325	MATERIAL SELLER CERT	-
326	SPECIAL MATERIAL INSPECTION REPORT	-
205	MANUFACTURING, INSPECTION, AND TEST PLAN	-
312	FIELD INSPECTION AND TEST PLAN	-
321	WELD AND BRAZE INSPECTION REPORT	-
322	HEAT TREAT REPORT (W/CHART)	-
310	LEAK TEST REPORT	-
315	CLEANING CERT	-
318	DEVIATION REQUEST	-
319	NONCONFORMANCE PROCESS	-
323	DIMENSIONAL REPORT	-
330	FUNCTIONAL TEST REPORT	-
:	:	:
:	:	:
:	:	:
:	:	:
:	:	:
100	DOCUMENTATION	

▲ SYMBOL X INDICATES APPLICABLE TO ALL PARTS OR ITEMS

QA REP ..... DATE .....

RPE

REV. XX DATE XX/XX/XX

WEIGHT: APPROX. 2,348 LBS.

PRELIMINARY

REV	CHANGE TYPE	CHANGE CONTROL SYSTEM	CHANGE NOTICE NUMBER	DESCRIPTION	BY	CHK	SECT	DEPT	DATE	PE	REQ	DOE
00A	—	3	—	ISSUE FOR COMMENT AND INFORMATION	SMR				02/02			

REVISION OR ISSUE PURPOSE — REVISION APPROVALS

SCALE AS NOTED

TOLERANCES UNLESS OTHERWISE SPECIFIED
FRACTIONS ±
XX DECIMALS ±.01
XXX DECIMALS ±.005
ANGLES ±0°15'
BREAK SHARP EDGES .06 MAX
FINISH 125 RMS UNLESS OTHERWISE SPECIFIED

DES	DMW/MEP	11/01
DRW	M.E.PHILLIPS	11/01
CHK	:	:
L3	:	:
L2	:	:
:	T.E. FORNEK	02/02
:	:	:
:	:	:
:	:	:
:	:	:
:	:	:
:	:	:

DRAWING APPROVALS — DATE

ornl Oak Ridge National Laboratory
operated for the DEPARTMENT OF ENERGY under U.S. GOVERNMENT contract DE-AC05-00OR22725
Oak Ridge, Tennessee

SNS Spallation Neutron Source

SPALLATION NEUTRON SOURCE PROJECT
MULTI CORE VESSEL INSERT
LOWER MULTI C V INSR PLUG W/TUBING

BLDG	FL	SHT	OF	CLASS
8700	IST	1	2	U

107030600M8E8700A101 — REV 00A

107030600M8E8700A101

NO REPRESENTATION OR WARRANTY,EXPRESSED OR IMPLIED,IS MADE AS TO THE ACCURACY, COMPLETENESS OR USEFULNESS OF THE INFORMATION OR STATEMENTS CONTAINED IN THESE DRAWINGS, OR THAT THE USE OR DISCLOSURE OF ANY INFORMATION, APPARATUS, METHOD OR PROCESS DISCLOSED IN THESE DRAWINGS MAY NOT INFRINGE PRIVATE RIGHTS OF OTHERS. NO LIABILITY IS ASSUMED WITH RESPECT TO THE USE OF, OR FOR DAMAGES RESULTING FROM THE USE OF, ANY INFORMATION, APPARATUS, METHOD OR PROCESS DISCLOSED IN THESE DRAWINGS. DRAWINGS MADE AVAILABLE FOR INFORMATION TO BIDDER ARE NOT TO BE USED FOR OTHER PURPOSES, AND ARE TO BE RETURNED UPON REQUEST OF THE FORWARDING CONTRACTOR.

P THIS DRAWING PRODUCED ON PRO-ENGINEER

THIS DOCUMENT CONTROLLED BY
CHANGE CONTROL SYSTEM 3
SNS PROCEDURE SNS-TS-Q001

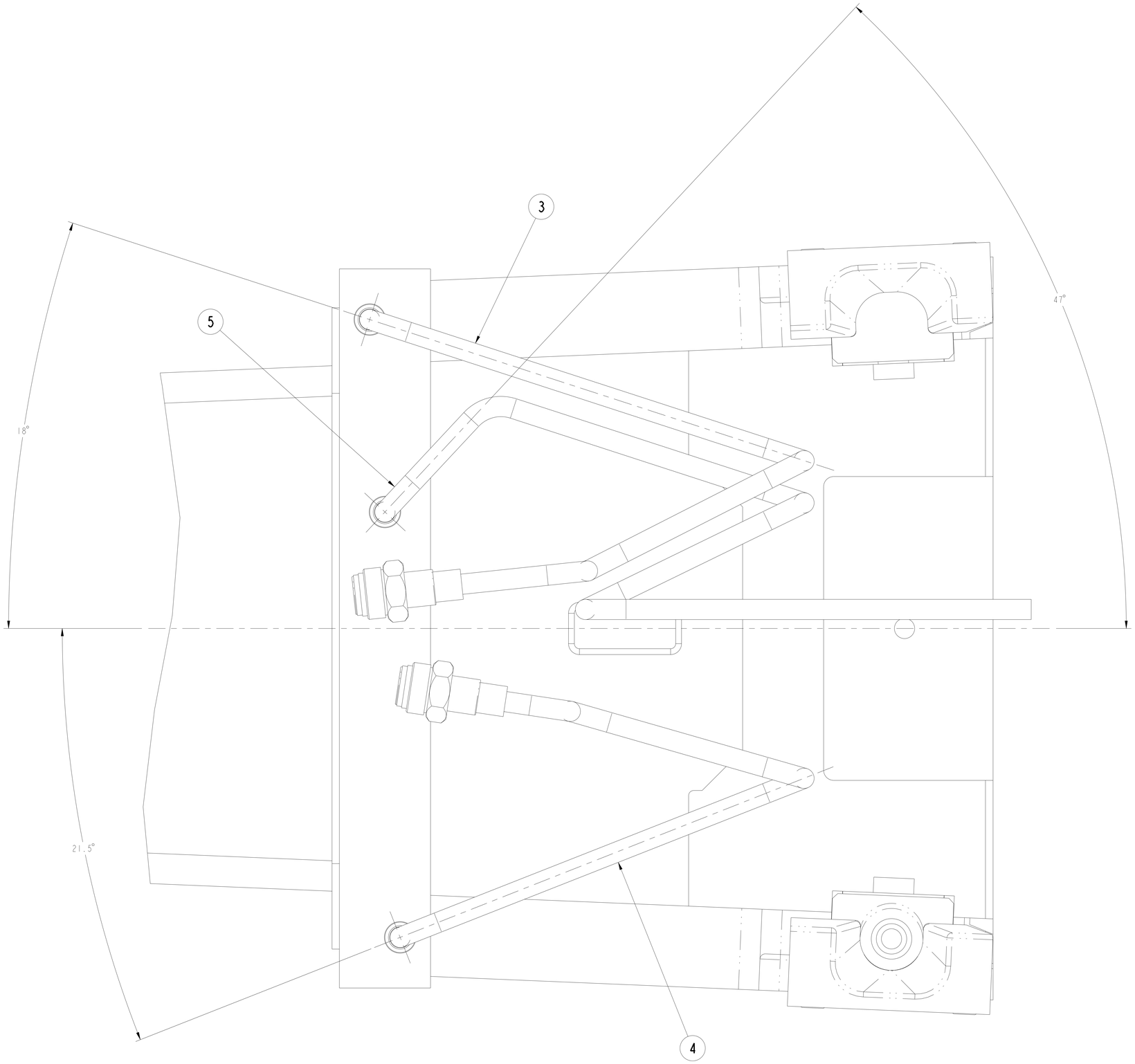

PARTIAL TOP VIEW
SCALE 1.000

NO REPRESENTATION OR WARRANTY,EXPRESSED OR IMPLIED,IS MADE AS TO THE ACCURACY, COMPLETENESS OR USEFULNESS OF THE INFORMATION OR STATEMENTS CONTAINED IN THESE DRAWINGS, OR THAT THE USE OR DISCLOSURE OF ANY INFORMATION, APPARATUS, METHOD OR PROCESS DISCLOSED IN THESE DRAWINGS MAY NOT INFRINGE PRIVATE RIGHTS OF OTHERS. NO LIABILITY IS ASSUMED WITH RESPECT TO THE USE OF, OR FOR DAMAGES RESULTING FROM THE USE OF, ANY INFORMATION, APPARATUS, METHOD OR PROCESS DISCLOSED IN THESE DRAWINGS. DRAWINGS MADE AVAILABLE FOR INFORMATION TO BIDDER ARE NOT TO BE USED FOR OTHER PURPOSES, AND ARE TO BE RETURNED UPON REQUEST OF THE FORWARDING CONTRACTOR.

P THIS DRAWING PRODUCED ON PRO-ENGINEER

PRELIMINARY

SCALE AS NOTED
TOLERANCES UNLESS OTHERWISE SPECIFIED
FRACTIONS :
XX DECIMALS ±.01
XXX DECIMALS ±.005
ANGLES ±0°15'
BREAK SHARP EDGES .06 MAX
FINISH 125 RMS UNLESS OTHERWISE SPECIFIED

ornl Oak Ridge National Laboratory
operated for the DEPARTMENT OF ENERGY under U.S. GOVERNMENT contract DE-AC05-00OR22725
Oak Ridge, Tennessee

SNS Spallation Neutron Source

SPALLATION NEUTRON SOURCE PROJECT
MULTI CORE VESSEL INSERT
LOWER MULTI C V INSR PLUG W/TUBING

BLDG	FL	SHT	OF	CLASS
8700	1ST	2	2	U

I07030600M8E8700A101 REV 00A

I07030600M8E8700A101