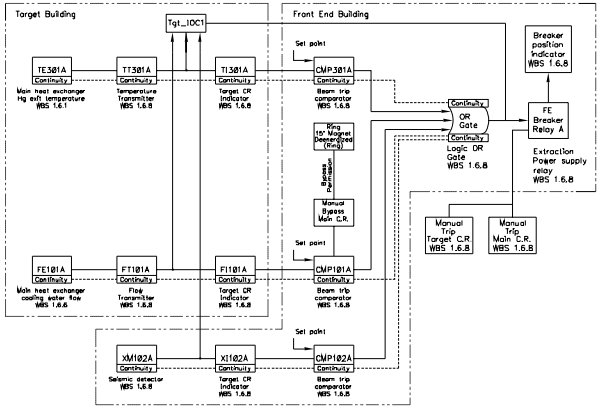

Target Protection System Channel A

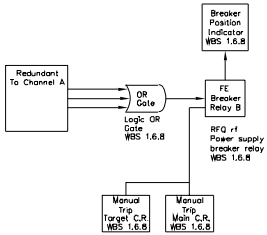

Target Protection System Channel B

REFERENCE DRAWINGS	NUMBER

LOCKHEED MARTIN ENERGY SYSTEMS, INC.
OPERATED BY THE DEPARTMENT OF ENERGY UNDER U.S. GOVERNMENT CONTRACT DE-AC-05-84OR21400
Oak Ridge, Tennessee Paducah, Kentucky

TARGET PROTECTION SYSTEM (TPS)
BLOCK DIAGRAM

TYPE					
FILE DATE	FILE POINT	BLDG	SHT. 1	OF 1	MF
SCALE N.T.S.	ID I&C	I3E087000A011			REV 0

TOLERANCES UNLESS OTHERWISE SPECIFIED	DRAWN BY R.W. JONES
FRACTIONS ± 1/64"	DRAWING CHECK
XX DECIMALS ± .015"	ENGINEER
XXX DECIMALS ± .005"	APPROVED
ANGLES ± 0° 30'	
BREAK SHARP EDGES	
	DRAWING APPROVALS / DATE

REV.	MF	DESCRIPTION	FILE DATE	BY	CHKD	ENGR	APVD
8							

REVISION OR ISSUE PURPOSE — APPROVALS

THIS DRAWING PRODUCED BY ORNL INSTRUMENTATION & CONTROLS DIVISION CAD SYSTEM AutoCAD 13 CAD FILENAME