NEXT ASS'Y: | FINAL ASS'Y: 1

NOTES

1. INTERPRET DRAWING PER MECHANICAL ENGINEERING DRAFTING STANDARD ES-3.1-2.
2. INTERPRET DIMENSIONS AND TOLERANCES PER ANSI Y14.5M.
3. DIMENSIONS ARE IN INCHES.

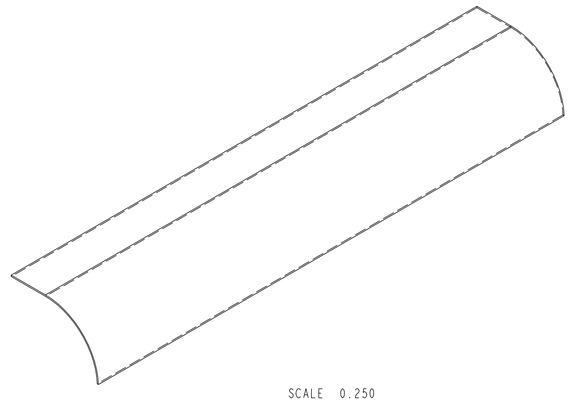

SCALE 0.250

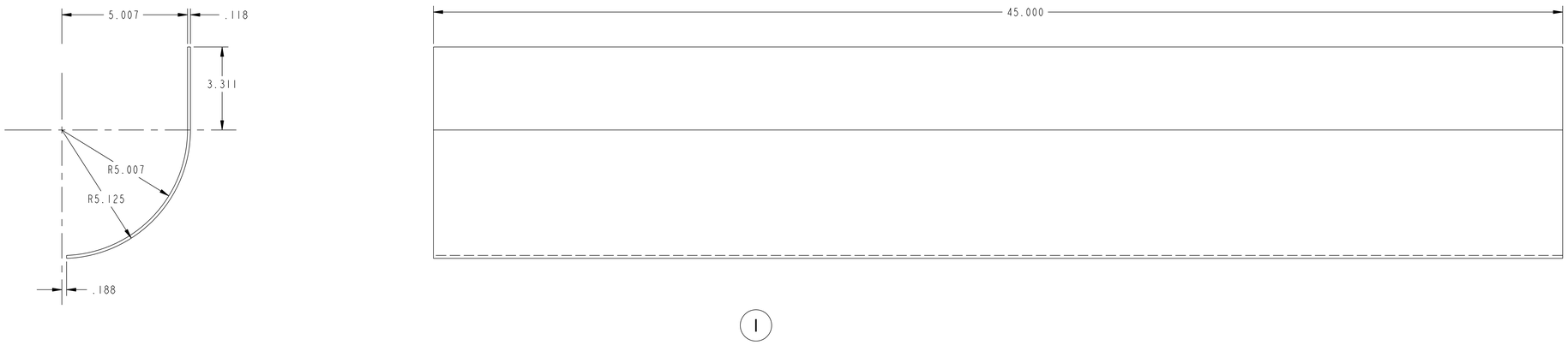

1			-1	OUTER SLEEVE SEGMENT	304 SST		
M3E087000 B128	-1	CAGE CODE	PART OR IDENTIFYING NO	NOMENCLATURE OR DESCRIPTION	MATERIAL	SPECIFICATION	FIND NO
		NEXT ASSEMBLY		PARTS LIST			

QUALITY VERIFICATION

MECHANICAL AND STRUCTURAL
REFERENCE ORNL QV-001

QV CLAUSE	DOCUMENTS REQUIRED	APPLICABLE TO PART NO *
303	MATERIAL MILL TEST REPORT	X
325	MATERIAL SELLER CERT	X
326	SPECIAL MATERIAL INSPECTION REPORT	X
205	MANUFACTURING, INSPECTION, AND TEST PLAN	X
312	FIELD INSPECTION AND TEST PLAN	X
321	WELD AND BRAZE INSPECTION REPORT	X
322	HEAT TREAT REPORT (W/CHART)	X
310	LEAK TEST REPORT	X
315	CLEANING CERT	X
318	DEVIATION REQUEST	X
319	NONCONFORMANCE REPORT	X
323	DIMENSIONAL REPORT	X
330	FUNCTIONAL TEST REPORT	X
:	:	:
:	:	:
:	:	:
:	:	:
:	:	:
100	DOCUMENTION	X

* SYMBOL X INDICATES APPLICABLE TO ALL PARTS OR ITEMS

QA COORDINATOR ..... DATE .....

RPE

REV. XX DATE XX/XX/XX

M3E087000B128

NO REPRESENTATION OR WARRANTY,EXPRESSED OR IMPLIED,IS MADE AS TO THE ACCURACY, COMPLETENESS OR USEFULNESS OF THE INFORMATION OR STATEMENTS CONTAINED IN THESE DRAWINGS, OR THAT THE USE OR DISCLOSURE OF ANY INFORMATION, APPARATUS, METHOD OR PROCESS DISCLOSED IN THESE DRAWINGS MAY NOT INFRINGE PRIVATE RIGHTS OF OTHERS. NO LIABILITY IS ASSUMED WITH RESPECT TO THE USE OF, OR FOR DAMAGES RESULTING FROM THE USE OF, ANY INFORMATION, APPARATUS, METHOD OR PROCESS DISCLOSED IN THESE DRAWINGS. DRAWINGS MADE AVAILABLE FOR INFORMATION TO BIDDER ARE NOT TO BE USED FOR OTHER PURPOSES, AND ARE TO BE RETURNED UPON REQUEST OF THE FORWARDING CONTRACTOR.

P THIS DRAWING PRODUCED ON PRO-ENGINEER

THIS DOCUMENT CONTROLLED BY
CHANGE CONTROL SYSTEM___XXXX___
ENGINEERING PROCEDURE___XXXX___

REV	CHANGE TYPE	CHANGE CONTROL SYSTEM	CHANGE REQUEST NUMBER	DESCRIPTION	A-E	BY	CHK	SECT	DEPT	DATE	PE	REQ	DATE	LM-ES	DATE	DOE	DATE	QA	CV	EC	EE	EM	IE	M	PD	SE	ST	XAD	PES
				REVISION OR ISSUE PURPOSE								REVISION APPROVALS						SQUAD CHECK											

SCALE 0.5=0.5

TOLERANCES UNLESS OTHERWISE SPECIFIED
FRACTIONS :
XX DECIMALS ±.01
XXX DECIMALS ±.005
ANGLES ±0°15'
BREAK SHARP EDGES .06 MAX
FINISH 125 UNLESS OTHERWISE SPECIFIED

DRAWING APPROVALS		DATE
DES	AEW	12/21/98
DRW	AEW	12/21/98
CHK	:	:
SECT	:	:
DEPT	:	:
PE	:	:
CR	:	:
PJ	:	:
REQ	:	:
	:	:
	:	:
	:	:

LOCKHEED MARTIN LOCKHEED MARTIN ENERGY SYSTEMS, INC.
operated for the DEPARTMENT OF ENERGY under U.S. GOVERNMENT contract DE-AC-05-84OR21400
Oak Ridge, Tennessee • Paducah, Kentucky

PROJECT NAME
SPALLATION NEUTRON SOURCE

TARGET ASSEMBLIES
WBS-6.1.1 SHROUD
OUTER SLEEVE SEGMENT

1	48	49	50	PLANT	BLDG	FL	SHT	OF	TYPE	CLASS
3	M	E	U	X-10	8700		1	1	S	U
51		52		53	M3E087000B128					REV 0