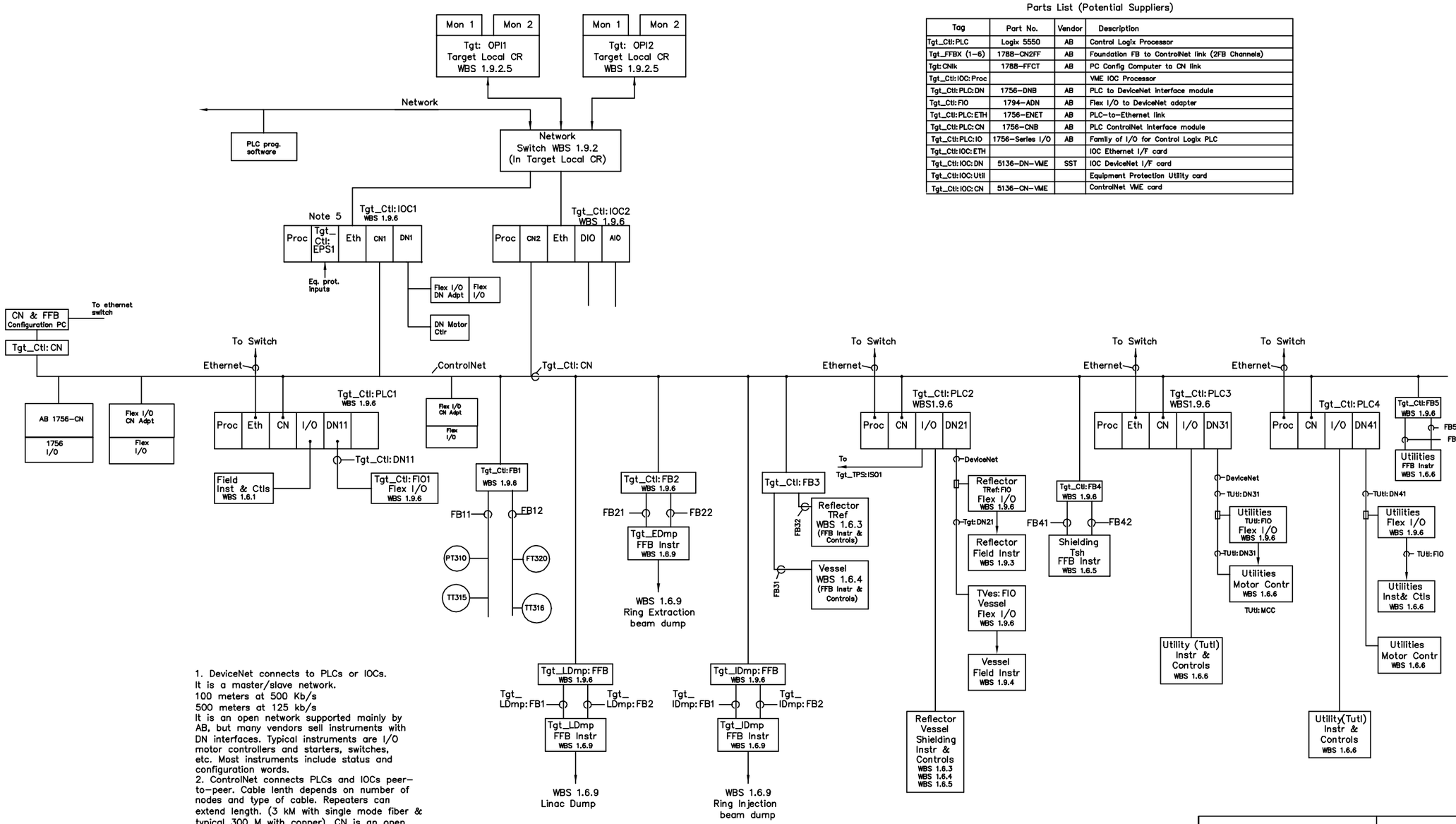

Parts List (Potential Suppliers)

Tag	Part No.	Vendor	Description
Tgt_Ctl:PLC	Logix 5550	AB	Control Logix Processor
Tgt_FFBX (1-6)	1788-CN2FF	AB	Foundation FB to ControlNet link (2FB Channels)
Tgt:CNlk	1788-FFCT	AB	PC Config Computer to CN link
Tgt_Ctl:IOC:Proc			VME IOC Processor
Tgt_Ctl:PLC:DN	1756-DNB	AB	PLC to DeviceNet interface module
Tgt_Ctl:FIO	1794-ADN	AB	Flex I/O to DeviceNet adapter
Tgt_Ctl:PLC:ETH	1756-ENET	AB	PLC-to-Ethernet link
Tgt_Ctl:PLC:CN	1756-CNB	AB	PLC ControlNet interface module
Tgt_Ctl:PLC:IO	1756-Series I/O	AB	Family of I/O for Control Logix PLC
Tgt_Ctl:IOC:ETH			IOC Ethernet I/F card
Tgt_Ctl:IOC:DN	5136-DN-VME	SST	IOC DeviceNet I/F card
Tgt_Ctl:IOC:Util			Equipment Protection Utility card
Tgt_Ctl:IOC:CN	5136-CN-VME		ControlNet VME card

1. DeviceNet connects to PLCs or IOCs. It is a master/slave network.
100 meters at 500 Kb/s
500 meters at 125 kb/s
It is an open network supported mainly by AB, but many vendors sell instruments with DN interfaces. Typical instruments are I/O motor controllers and starters, switches, etc. Most instruments include status and configuration words.
2. ControlNet connects PLCs and IOCs peer-to-peer. Cable lenth depends on number of nodes and type of cable. Repeaters can extend length. (3 kM with single mode fiber & typical 300 M with copper). CN is an open network supported mainly by AB, but other vendors sell equipment with CN interfaces. A CN link, which may contain multiple segments, can have a maximum of 99 nodes. Links can be bridged. CN has an option for redundant cables.
3. Foundation Fieldbus connects process instruments. FF instruments include internal control capabilities. FF network interfaces to CN with interface sold by Allen Bradley.

REFERENCE DRAWINGS	NUMBER

LOCKHEED MARTIN ENERGY SYSTEMS, INC.
operated for the DEPARTMENT OF ENERGY under U.S. GOVERNMENT contract DE-AC-05-84OR21400
Oak Ridge, Tennessee Paducah, Kentucky

TARGET CONTROL SYSTEM BLOCK DIAGRAM

10/28/99

TOLERANCES UNLESS OTHERWISE SPECIFIED
FRACTIONS ± 1/64"
XX DECIMALS ± .015"
XXX DECIMALS ± .005"
ANGLES ± 0° 30'
BREAK SHARP EDGES

DRAWN BY R.W. JONES
DRAWING CHECK
ENGINEER R. E. Battle
APPROVED
DRAWING APPROVALS DATE

THIS DRAWING PRODUCED BY ORNL INSTRUMENTATION & CONTROLS DIVISION
CAD SYSTEM AutoCAD 14
CAD FILENAME

REV.	MF	DESCRIPTION	FILE DATE	BY	CHKD	ENGR	APVD
0							

REVISION OR ISSUE PURPOSE — APPROVALS

FILE DATE	FILE POINT	BLDG	SHT. 1 OF 1	MF

SCALE N.T.S. | ID | 1090600001 8D87000001 | REV 00 | TYPE