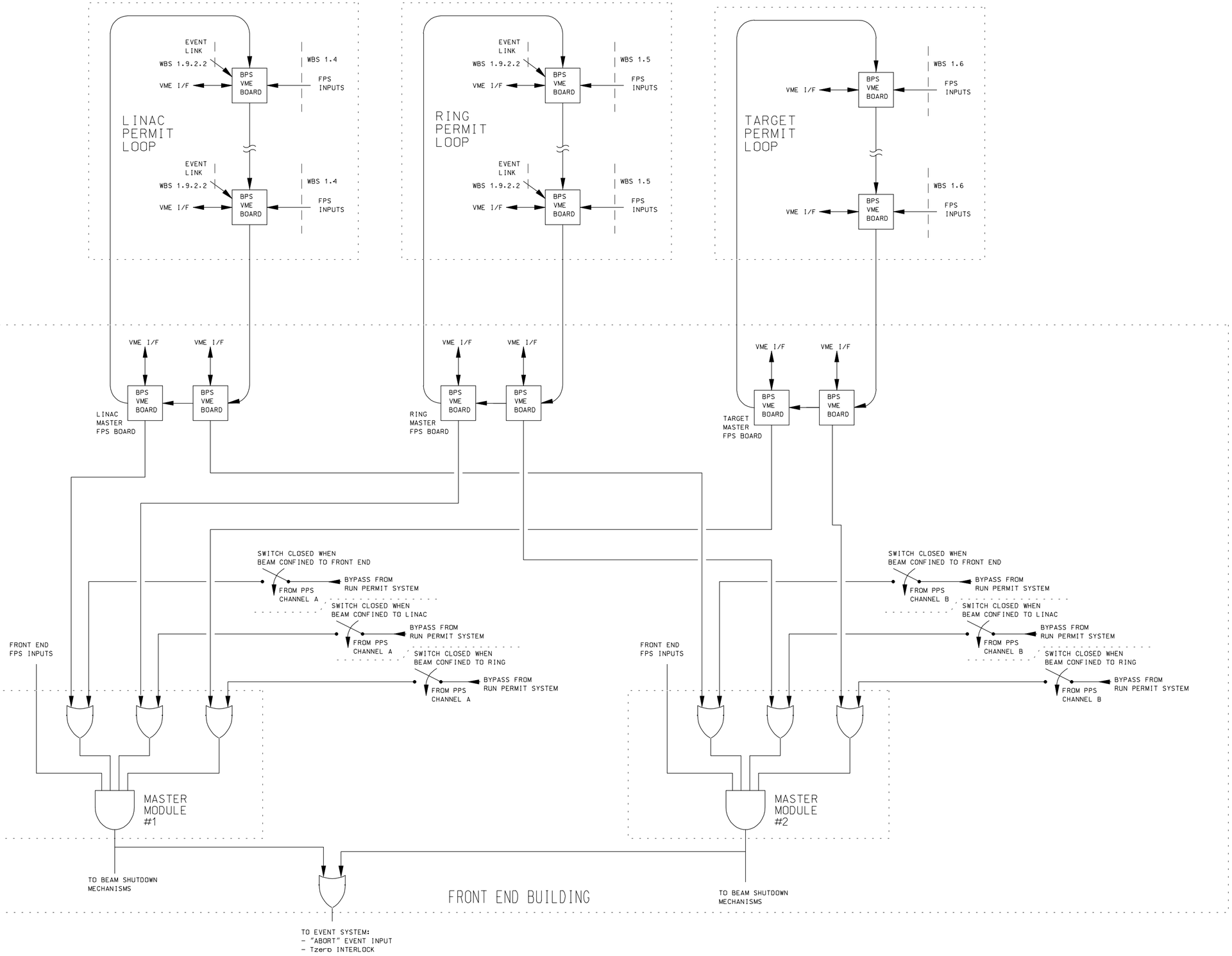

CONCEPTUAL DESIGN OF FAST PROTECT SYSTEM

REV. 12/15/99

NO REPRESENTATION OR WARRANTY, EXPRESSED OR IMPLIED, IS MADE AS TO THE ACCURACY, COMPLETENESS OR USEFULNESS OF THE INFORMATION OR STATEMENTS CONTAINED IN THESE DRAWINGS, OR THAT THE USE OR DISCLOSURE OF ANY INFORMATION, APPARATUS, METHOD, OR PROCESS DISCLOSED IN THESE DRAWINGS MAY NOT INFRINGE PRIVATE RIGHTS OF OTHERS. NO LIABILITY IS ASSUMED WITH RESPECT TO THE USE OF, OR FOR DAMAGES RESULTING FROM THE USE OF ANY INFORMATION, APPARATUS, METHOD, OR PROCESS DISCLOSED IN THESE DRAWINGS. DRAWINGS MADE AVAILABLE FOR INFORMATION TO BIDDER ARE TO BE USED FOR OTHER PURPOSES AND ARE TO BE RETURNED UPON REQUEST OF THE FORWARDING CONTRACTOR.

SECTION AND DETAIL KEY

THIS DOCUMENT CONTROLLED BY
CHANGE CONTROL SYSTEM
ENGINEERING PROCEDURE

REV	DESCRIPTION	BY	CHK	SECT
	REVISION OR ISSUE PURPOSE			

DEPT	DATE	PE	REQ	DATE	LMES	DATE	RPE	RPE NO	DATE
REVISION APPROVALS									

ST	CV	EC	EE	EM	IE	M	PD	SE	AR
SQUAD CHECK									

RPE
REV. DATE
DRAWING APPROVALS

DSGN
DRW
CHKR
SECT
DEPT
PE
PJ
REQ
LMES

LOCKHEED MARTIN
LOCKHEED MARTIN ENERGY SYSTEMS, INC.
managed for the DEPARTMENT OF ENERGY under
U.S. GOVERNMENT contracts DE-AC-05-84OR21400 and DE-AC-05-76OR00033
Oak Ridge, Tennessee • Paducah, Kentucky • Portsmouth, Ohio

PROJECT NAME:
FAST PROTECT SYSTEM
CONCEPTUAL DESIGN

1	48	49	50	PLANT	BLDG	FL	SH.	OF	TYPE	CLASS
	51		52		53					REV

$DATE$ $TIME$
$FILE$
Seed Date: Feb 1, '97