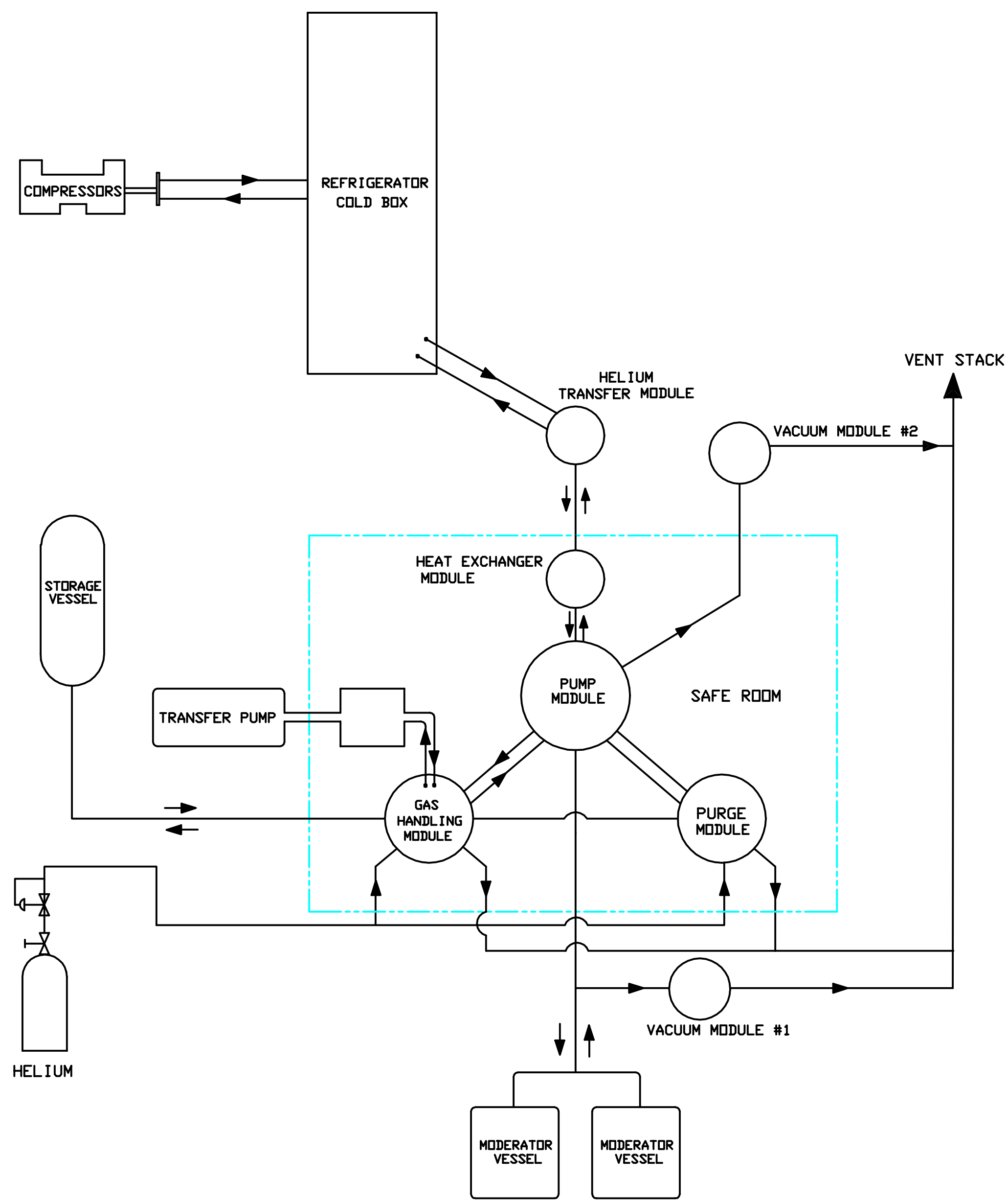

ORIGINAL SIGNED BY:

LOCKHEED MARTIN ENERGY SYSTEMS, INC.

managed for the DEPARTMENT OF ENERGY under U.S. GOVERNMENT contract DE-AC-05-84OR21400

Oak Ridge, Tennessee & Paducah, Kentucky

SNS MODERATOR SYSTEMS
CRYOGENIC MODERATORS
MODULAR INTERFACE DIAGRAM

N/A

TOLERANCES UNLESS OTHERWISE SPECIFIED		
FRACTIONS	DES	
XX DECIMALS ? .01	DRW	6/30/99
XXX DECIMALS ? .005	CHK	
ANGLES ? 0°-30'	SECT	
BREAK SHARP EDGES MAX. FINISH XXX RMS	DEPT & PLANT	
A-E	PE	
	CR	
	PJ	
NM-ES	REQ	
DOE		
	DRAWING APPROVALS	DATE

TYPE	1	48	49	50	PLANT	BLDG	FL	SHEET	OF	CLASS	SCALE	ID	DWG NO.	REV
X	3	M	E	U	X-10	8700	X	01	01	U	NOTED	XXXXX	M3E087000C308	0

NUMBER OF MODELS IN THIS DRAWING= 1

REV				DESCRIPTION	A-E	BY	CHK	SECT	DEPT	DATE	PE	REQ	DATE	NM-ES	DATE	DOE	DATE	QA	EO	SE	EN	IC	M	PS	SE	XAD
0				XXXXXXXXXXXXXXXXXXXXXXXXXXXXXX	XXX																					

REVISION OR ISSUE PURPOSE — REVISION APPROVALS — DESIGN CHECK

DOCUMENT TYPE 4

THIS DOCUMENT CONTROLLED BY CHANGE CONTROL SYSTEM 3 ENGINEERING PROCEDURE EP-C-18

THIS DRAWING PRODUCED ON CADAM

NO REPRESENTATION OR WARRANTY, EXPRESSED OR IMPLIED, IS MADE AS TO THE ACCURACY, COMPLETENESS OR USEFULNESS OF THE INFORMATION OR STATEMENTS CONTAINED IN THESE DRAWINGS, OR THAT THE USE OR DISCLOSURE OF ANY INFORMATION, APPARATUS, METHOD OR PROCESS DISCLOSED IN THESE DRAWINGS MAY NOT INFRINGE PRIVATE RIGHTS OF OTHERS. NO LIABILITY IS ASSUMED WITH RESPECT TO THE USE OF, OR FOR DAMAGES RESULTING FROM THE USE OF, ANY INFORMATION, APPARATUS, METHOD OR PROCESS DISCLOSED IN THESE DRAWINGS. DRAWINGS MADE AVAILABLE FOR INFORMATION TO BIDDER ARE NOT TO BE USED FOR OTHER PURPOSES, AND ARE TO BE RETURNED UPON REQUEST OF THE FORWARDING CONTRACTOR.

M3E087000C302