REVISIONS						
ZONE	REV	DESCRIPTION	CHANGED BY	DATE	CLASS REVIEW	APPROVED
---	A	ORIGINAL ISSUE	-------	--------	NR	---
---	--	----------	-------	--------	NR	---

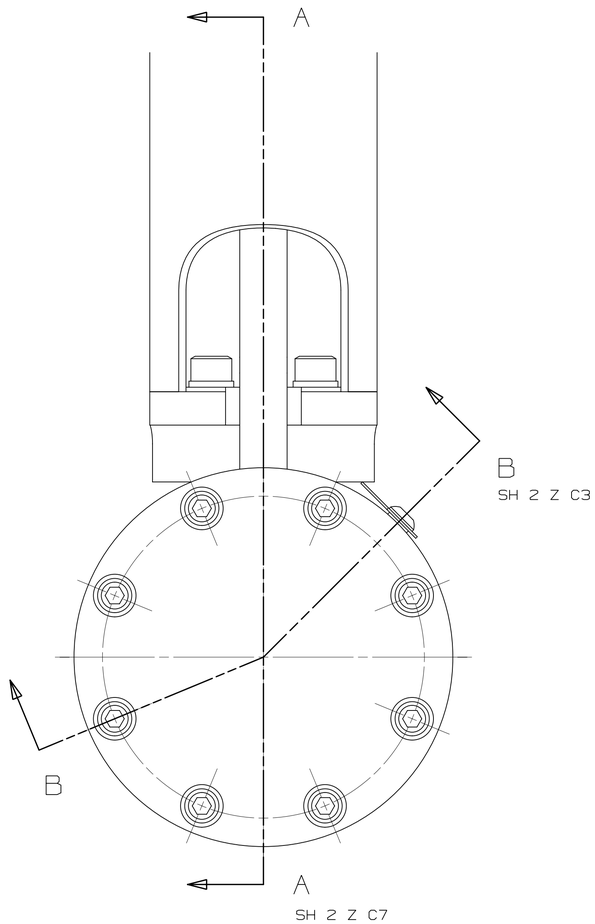

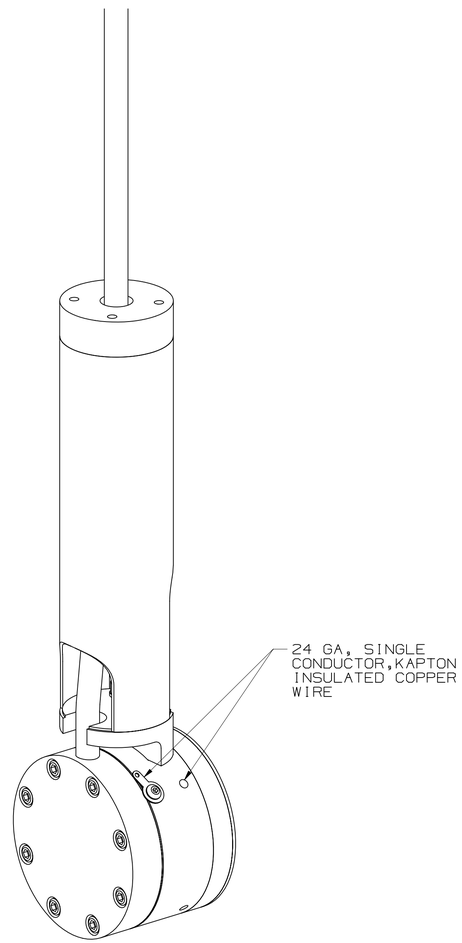

ASSEMBLY -5 SHOWN

QTY REQD					PART OR IDENTIFYING NO.	NOMENCLATURE OR DESCRIPTION	MATERIAL SPECIFICATION	ITEM NO
2	2	2	2	2		SCREW, SOCKET HEAD #8-32 UNC-2A X .875 LONG (VENTED)	STAINLESS STEEL	34
8						SCREW, SOCKET HEAD #6-32 UNC-2A X .75 LONG (VENTED)		33
	8					SCREW, SOCKET HEAD #6-32 UNC-2A X .625 LONG (VENTED)		32
		8	8	8		SCREW, SOCKET HEAD #6-32 UNC-2A X .50 LONG (VENTED)	STAINLESS STEEL	31
8						SCREW, FLAT HEAD #4-40 UNC-2A X 1.25 LONG (VENTED)	STAINLESS STEEL	30
	8					SCREW, FLAT HEAD #4-40 UNC-2A X .875 LONG (VENTED)	STAINLESS STEEL	29
		8				SCREW, FLAT HEAD #4-40 UNC-2A X .625 LONG (VENTED)	STAINLESS STEEL	28
			8	8		SCREW, FLAT HEAD #4-40 UNC-2A X .25 LONG (VENTED)	STAINLESS STEEL	27
1	1	1	1	1		SCREW, BUTTON HEAD #4-40 UNC-2A X .625 LONG (VENTED)	STAINLESS STEEL	26
1	1	1	1	1		LUG, SOLDER	COPPER	25
								24
								23
								22
1	1	1	1	1	155Y521895-1	DETAIL, INNER TUBE		21
1	1	1	1	1	155Y521894	DETAIL, SIGNAL INSULATOR		20
1	1	1	1	1	155Y521893	DETAIL, SPACER INSULATOR		19
		1	1	1	155Y521892	DETAIL, FACE PLATE		18
1					155Y521891-9	DETAIL, ABSORBER		17
	1				155Y521891-7	DETAIL, ABSORBER		16
		1			155Y521891-5	DETAIL, ABSORBER		15
			1		155Y521891-3	DETAIL, ABSORBER		14
				1	155Y521891-1	DETAIL, ABSORBER		13
1	1	1	1	1	155Y521889	DETAIL, BIAS RING		12
1	1	1	1	1	155Y521888	DETAIL, BIAS RING INSULATOR		11
1	1	1	1	1	155Y521887	DETAIL, COLLECTOR INSULATOR		10
		1	1	1	155Y521896	DETAIL, COLLECTOR GROOVED		9
1	1				155Y521886	DETAIL, COLLECTOR FLAT		8
1	1	1	1	1	155Y521897	DETAIL, UPPER MOUNTING BRACKET		7
1	1	1	1	1	155Y521904	WELDMENT HEAT EXCHANGER		6
1					155Y521883-1	DETAIL, MAIN BODY		5
	1				155Y521883-1	DETAIL, MAIN BODY		4
		1			155Y521883-1	DETAIL, MAIN BODY		3
			1		155Y521883-1	DETAIL, MAIN BODY		2
				1	155Y521883-1	DETAIL, MAIN BODY		1
-9	-7	-5	-3	-1	155Y521882	ASSEMBLY, FARADAY CUP DEGRADER		

PARTS LIST/BILL OF MATERIAL

NOTES: UNLESS OTHERWISE SPECIFIED

101 ABBREVIATIONS PER ASME Y14.38-1999.
102 THOROUGHLY CLEAN PARTS TO REMOVE ALL OIL, GREASE, DIRT, CHIPS, ETC.
201 DIMENSIONING AND TOLERANCING PER ASME Y14.5M-1994.
203 SURFACE TEXTURE PER ASME B46.1-1995.
204 ALL INSIDE CORNERS TO BE R.010 MAX.
206 C'SINK ALL TAPPED HOLES 100°, TO MAJOR DIA.
208 REMOVE BURRS AND SHARP EDGES TO .010 MAX.
401 BAG AND TAG PART WITH DRAWING NUMBER & REVISION LETTER.

PRELIMINARY
FOR INFORMATION OR REVIEW ONLY. DO NOT USE FOR PROCUREMENT OR FABRICATION. DRAWING CONTENT SUBJECT TO FUTURE CHANGE.

DATE 3-4-2002

SNS DWG No. 104050000-I8D-8200-B882-R00

DRAWING LEVEL: PRODUCTION

UNCLASSIFIED

TASK CONTRACTOR

CAD SYSTEM & VER.: UG-V16.0.4

SEE FINAL DESIGN AUTHORIZATION SHEET FOR SIGNATURES. SHEET IS FILED BY DRAWING NUMBER AT THE SNS PROJECT OFFICE.

UNLESS OTHERWISE SPECIFIED: DIMENSIONS ARE IN INCHES.
TOLERANCES ARE:
DECIMALS .X= ±.1 .XX= ±.01 .XXX= ±.005
ANGULAR=±.25°
MACHINED FINISH: 125

	APPROVALS	DATE	GROUP
DESIGNED	M. CATANACH	6-6-01	SNS-3
DRAWN	H. SALAZAR	8-8-01	SNS-3
CHECKED			
ENGINEERING	S. ELLIS	6-6-01	SNS-3
VACUUM			
PHYSICS			
APPROVED			

NEXT ASSEMBLY USED ON: ---------- ----------
APPLICATION

Los Alamos SNS DIVISION
Los Alamos National Laboratory
Los Alamos, New Mexico 87545

PROJECT: SNS

DTL TANK 1 THRU 5 FARADAY CUP/DEGRADER ASSEMBLY

SIZE	CAGE CODE	DWG NO. & CAD FILENAME	REV
D	88516	155Y521882	-A

SCALE 2/1 DO NOT SCALE SHEET 1 OF 2

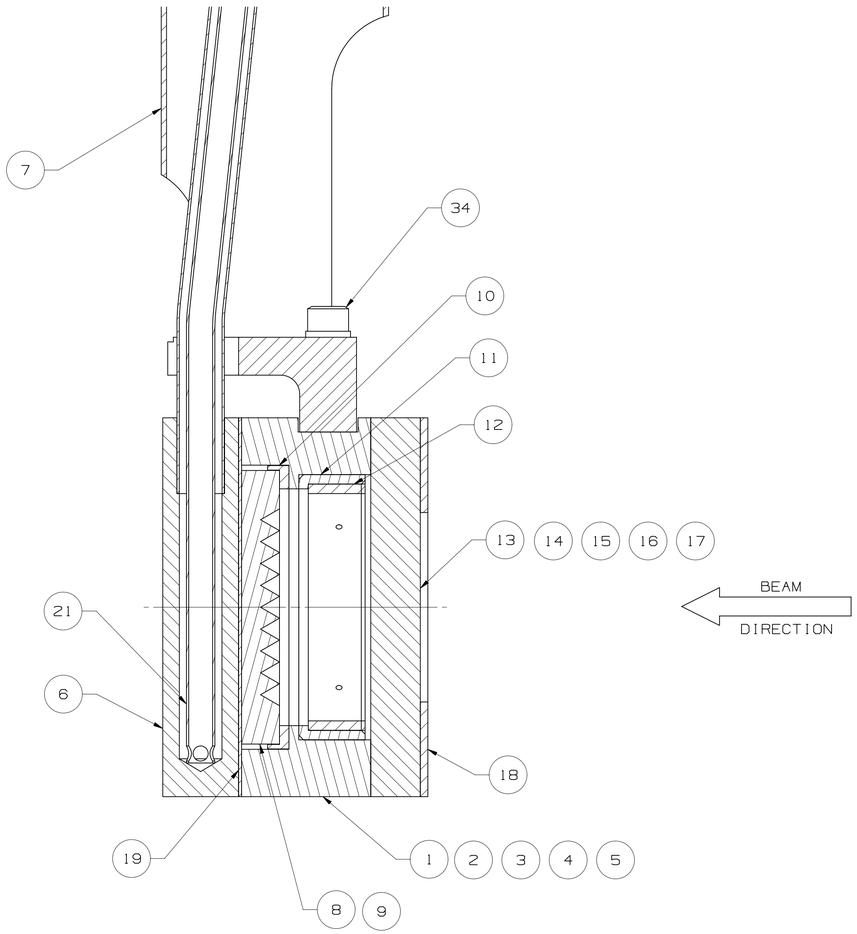

SECTION A - A

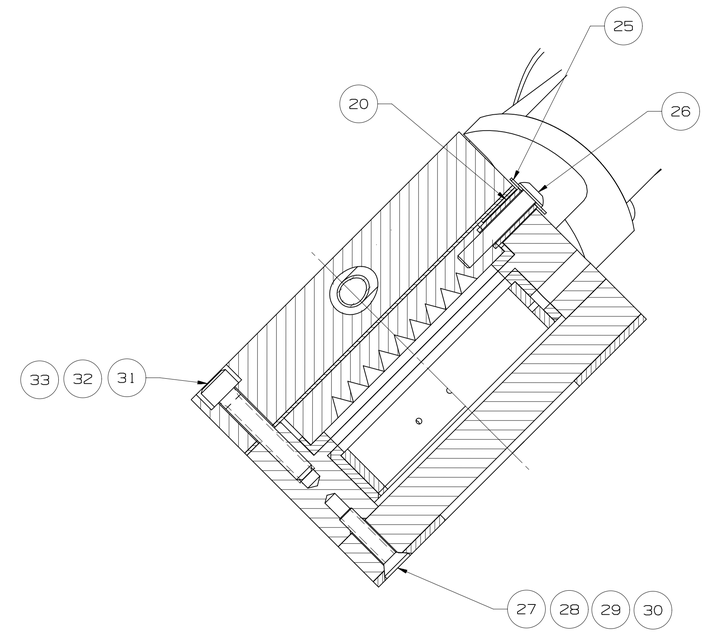

SECTION B - B

NOTES: UNLESS OTHERWISE SPECIFIED

101 ABBREVIATIONS PER ASME Y14.38-1999.
102 THOROUGHLY CLEAN PARTS TO REMOVE ALL OIL, GREASE, DIRT, CHIPS, ETC.
201 DIMENSIONING AND TOLERANCING PER ASME Y14.5M-1994.
203 SURFACE TEXTURE PER ASME B46.1-1995.
204 ALL INSIDE CORNERS TO BE R.010 MAX.
206 C'SINK ALL TAPPED HOLES 100°, TO MAJOR DIA.
208 REMOVE BURRS AND SHARP EDGES TO .010 MAX.
401 BAG AND TAG PART WITH DRAWING NUMBER & REVISION LETTER.

PRELIMINARY
FOR INFORMATION OR REVIEW ONLY. DO NOT USE FOR PROCUREMENT OR FABRICATION. DRAWING CONTENT SUBJECT TO FUTURE CHANGE.

DATE 3-5-2002

SNS DWG No. 104050000-I8D-8200-B882-R00

Los Alamos SNS DIVISION
Los Alamos National Laboratory
Los Alamos,New Mexico 87545

PROJECT SNS

TASK CONTRACTOR

SIZE	CAGE CODE	DWG No.	REV
D	88516	155Y521882	-A

SCALE 2/1 DO NOT SCALE SHEET 2 OF 2