REVISIONS						
ZONE	REV	DESCRIPTION	CHANGED BY	DATE	CLASS REVIEW	APPROVED
---	A	ORIGINAL ISSUE	-------	-------	NR	---
---	--	----------	-------	-------	NR	---

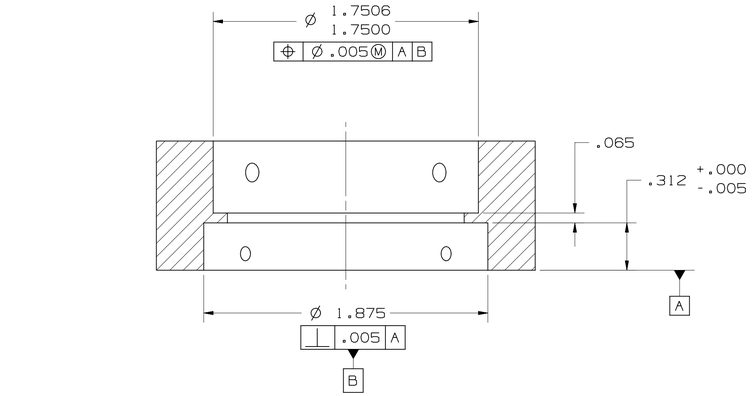

SECTION C - C

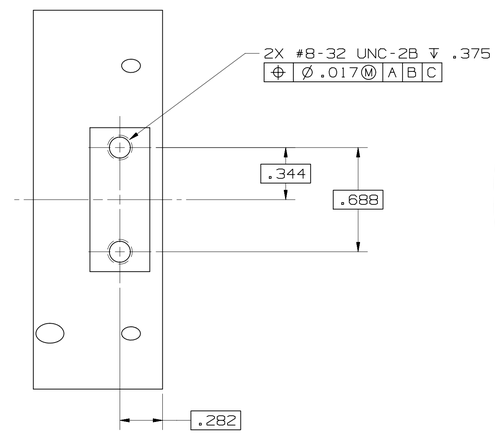

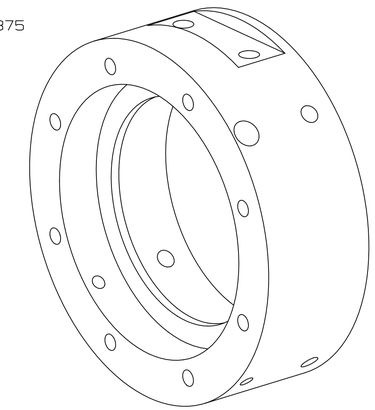

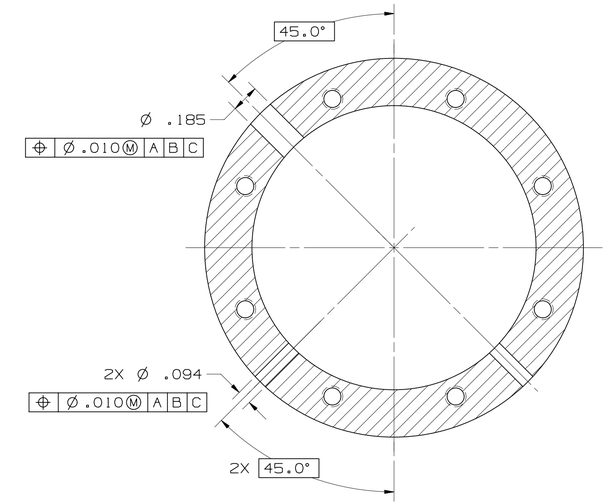

SECTION D - D

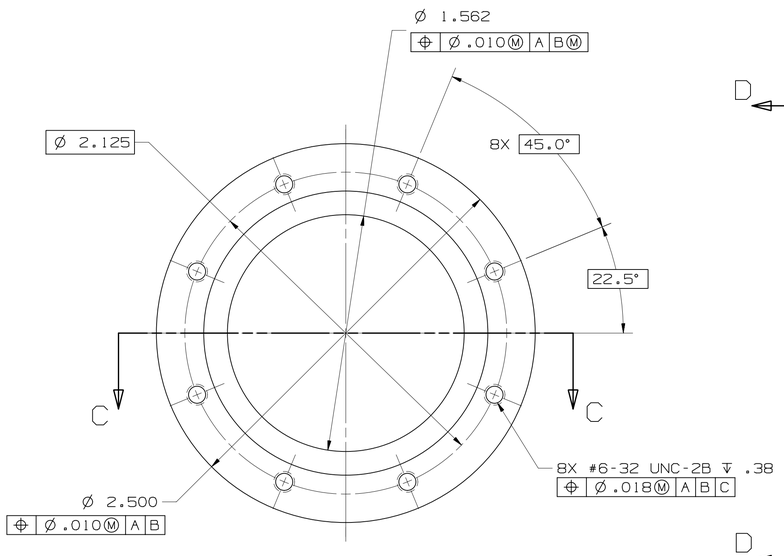

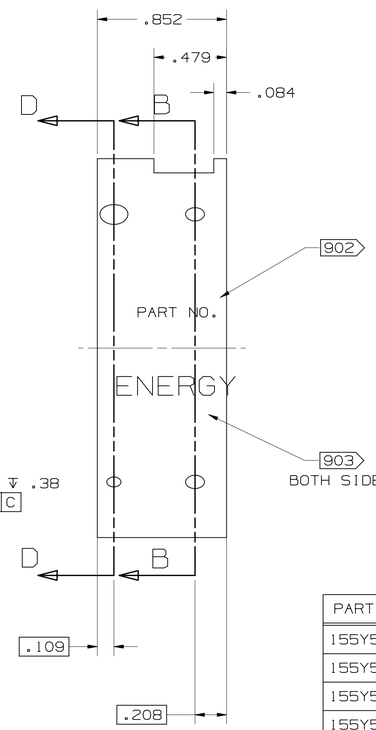

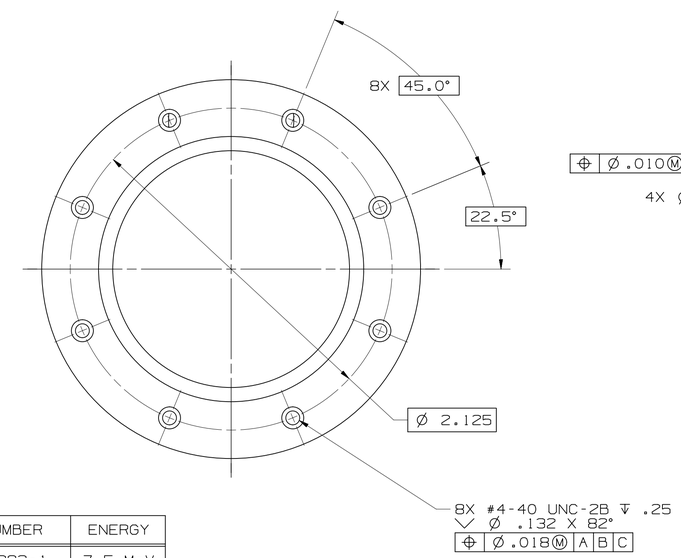

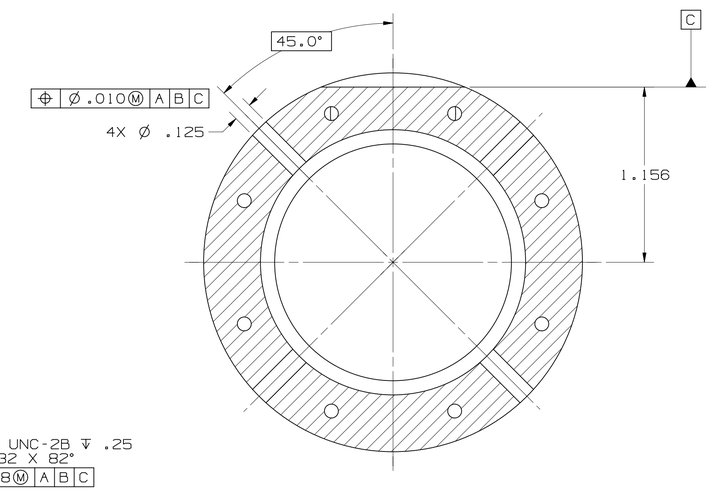

SECTION B - B

PART NUMBER	ENERGY
155Y521883-1	7.5 MeV
155Y521883-3	22.8 MeV
155Y521883-5	39.8 MeV
155Y521883-7	56.6 MeV
155Y521883-9	72.5 MeV
155Y521883-11	86.8 MeV

NOTES: UNLESS OTHERWISE SPECIFIED

101 ABBREVIATIONS PER ASME Y14.38-1999.
102 THOROUGHLY CLEAN PARTS TO REMOVE ALL OIL, GREASE, DIRT, CHIPS, ETC.
201 DIMENSIONING AND TOLERANCING PER ASME Y14.5M-1994.
203 SURFACE TEXTURE PER ASME B46.1-1995.
204 ALL INSIDE CORNERS TO BE R.010 MAX.
206 C'SINK ALL TAPPED HOLES 100°, TO MAJOR DIA.
208 REMOVE BURRS AND SHARP EDGES TO .010 MAX.
401 BAG AND TAG PART WITH DRAWING NUMBER & REVISION LETTER.
901 FINISH: NICKEL PLATE PER MIL-C-26074E, CLASS 1, GRADE B
902 MILLING MACHINE ETCH PART NUMBER APPROXIMATELY WHERE SHOWN IN .13 HIGH CHARACTERS.
903 MILLING MACHINE ETCH ENERGY VALUE APPROXIMATELY WHERE SHOWN IN .25 HIGH CHARACTERS.

PRELIMINARY
FOR INFORMATION OR REVIEW ONLY. DO NOT USE FOR PROCUREMENT OR FABRICATION. DRAWING CONTENT SUBJECT TO FUTURE CHANGE.
DATE 3-4-2002

SNS DWG No. 104050000-I8E-8200-B883-R00

QTY REQD	PART OR IDENTIFYING NO.	NOMENCLATURE OR DESCRIPTION	MATERIAL SPECIFICATION	ITEM NO
		ROUND ROD	SAE 1020 STEEL	

PARTS LIST/BILL OF MATERIAL

DRAWING LEVEL: PRODUCTION
UNCLASSIFIED

TASK CONTRACTOR

CAD SYSTEM & VER. UG-V16.0.4

SEE FINAL DESIGN AUTHORIZATION SHEET FOR SIGNATURES. SHEET IS FILED BY DRAWING NUMBER AT THE SNS PROJECT OFFICE.

UNLESS OTHERWISE SPECIFIED: DIMENSIONS ARE IN INCHES.
TOLERANCES ARE:
DECIMALS .X: ±.1 .XX: ±.01 .XXX: ±.005
ANGULAR: ±.25°
MACHINED FINISH: 125

	APPROVALS	DATE	GROUP
DESIGNED	M. CATANACH	6-6-01	SNS-3
DRAWN	H. SALAZAR	8-8-01	SNS-3
CHECKED			
ENGINEERING	S. ELLIS	6-6-01	SNS-3
VACUUM			
PHYSICS			
APPROVED			

155Y521882	155Y521903
NEXT ASSEMBLY USED ON	
APPLICATION	

Los Alamos SNS DIVISION
Los Alamos National Laboratory
Los Alamos, New Mexico 87545

PROJECT: SNS

DTL
FARADAY CUP/DEGRADER
MAIN BODY DETAIL

SIZE	CAGE CODE	DWG NO. & CAD FILENAME	REV
D	88516	155Y521883	-A

SCALE 2/1 DO NOT SCALE SHEET 1 OF 1