REVISIONS						
ZONE	REV	DESCRIPTION	CHANGED BY	DATE	CLASS REVIEW	APPROVED
---	A	ORIGINAL ISSUE	-------	--------	NR	---
---	--	----------	-------	--------	NR	---

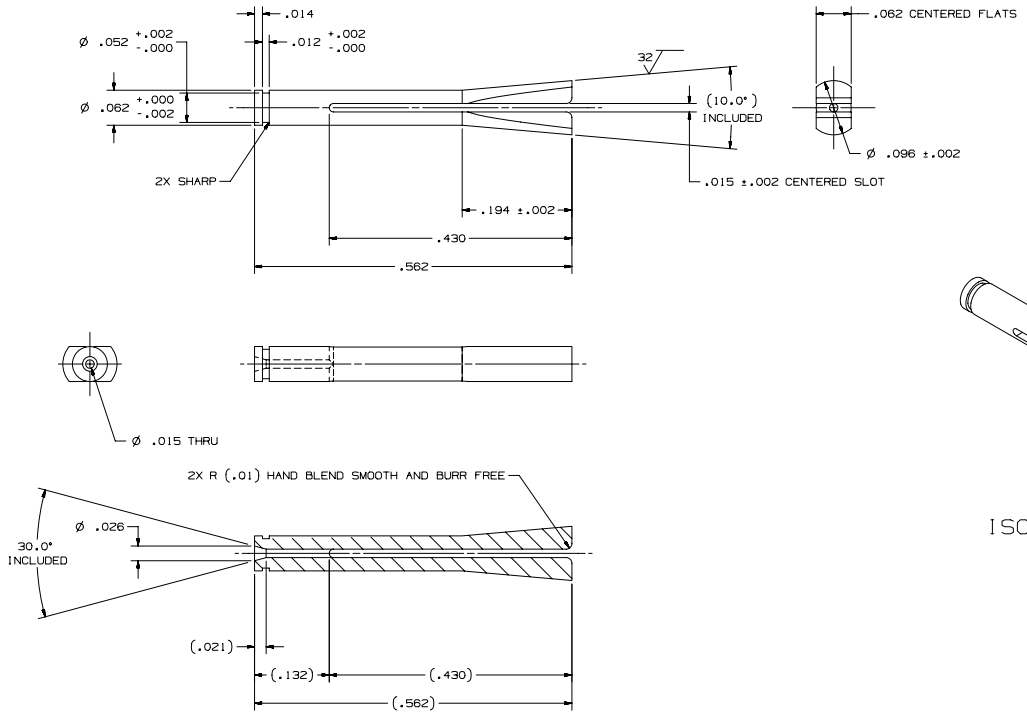

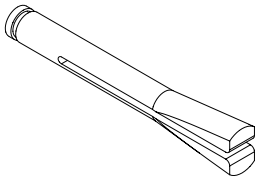

ISOMETRIC VIEW
(FREE-STATE)
SCALE: NONE

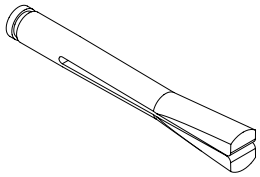

ISOMETRIC VIEW
(CLAMPED POSITION)
SCALE: NONE

NOTES: UNLESS OTHERWISE SPECIFIED

101 ABBREVIATIONS PER ASME Y14.38-1999.

102 THOROUGHLY CLEAN PARTS TO REMOVE ALL OIL, GREASE, DIRT, CHIPS, ETC.

201 DIMENSIONING AND TOLERANCING PER ASME Y14.5M-1994.

208 REMOVE BURRS AND SHARP EDGES TO .010 MAX.

401 BAG AND TAG PART WITH DRAWING NUMBER & REVISION LETTER.

QTY REQD	PART OR IDENTIFYING NO.	NOMENCLATURE OR DESCRIPTION	MATERIAL SPECIFICATION	ITEM NO
--	155Y520824	CLAMP COLLET	HALF HARD COPPER	--

PARTS LIST/BILL OF MATERIAL

DRAWING LEVEL: PRODUCTION

UNCLASSIFIED

TASK CONTRACTOR

CAD SYSTEM & VER.: UNIGRAPHICS V16.0/IMAN

SEE FINAL DESIGN AUTHORIZATION SHEET FOR SIGNATURES; SHEET IS FILED BY DRAWING NUMBER AT THE SNS PROJECT OFFICE.

Los Alamos SNS DIVISION — Los Alamos National Laboratory, Los Alamos, New Mexico 87545

PROJECT: SNS

UNLESS OTHERWISE SPECIFIED: DIMENSIONS ARE IN INCHES. TOLERANCES ARE:
DECIMALS .X= ±.1, .XX= ±.01, .XXX= ±.005
ANGULAR= ±.25°
MACHINED: 125 FINISH

APPROVALS		DATE	GROUP
DESIGNED	D. SATTLER	12-13-01	SNS-3
DRAWN	D. SATTLER	12-13-01	SNS-3
CHECKED	R.MEYER	07-17-02	SNS-3
ENGINEERING	R. MEYER	07-19-02	SNS-3
VACUUM	B. GILLES	07-19-02	LANCE-2
PHYSICS	M. PLUM	07-19-02	SNS-3
APPROVED	N. BULTMAN	07-18-02	SNS-3

155Y520823 ---------- NEXT ASSEMBLY USED ON APPLICATION

SNS DWG No. 104050000-I8D-8200-A824-R00

SNS DIAGNOSTICS WIRE SCANNER CLAMP COLLET

SIZE	CAGE CODE	DWG NO. & CAD FILENAME	REV
D	88516	155Y520824	-A

SCALE 10/1 — DO NOT SCALE — SHEET 1 OF 1