REVISIONS						
ZONE	REV	DESCRIPTION	CHANGED BY	DATE	CLASS REVIEW	APPROVED
---	A	ORIGINAL ISSUE	-------	--------	NR	---
---	--	----------	-------	--------	NR	---

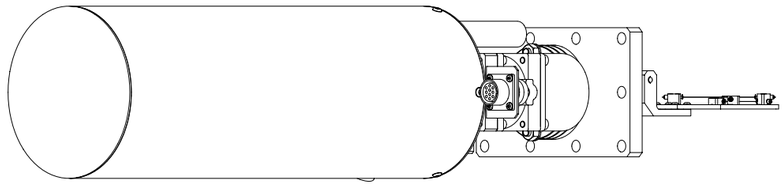

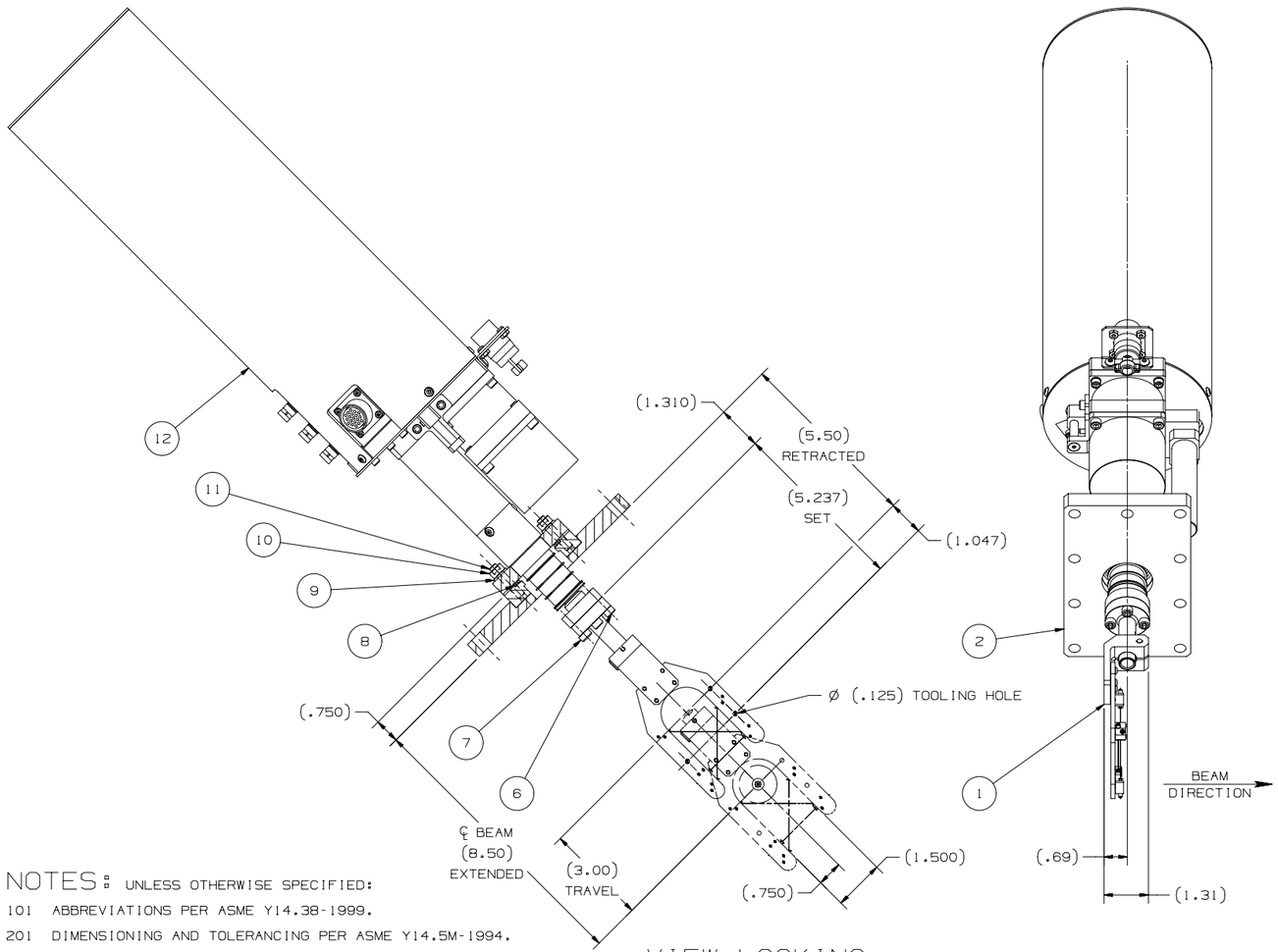

VIEW LOOKING DOWN STREAM

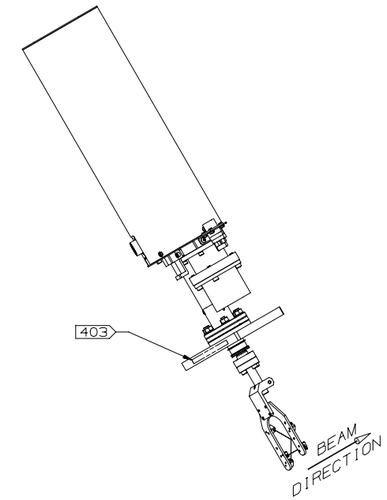

ISOMETRIC VIEW
(RETRACTED POSITION)
SCALE: NONE

QTY REQD	PART OR IDENTIFYING NO.	NOMENCLATURE OR DESCRIPTION	MATERIAL SPECIFICATION	ITEM NO
1	L-2250-3-T-LWS	3 INCH STROKE ACTUATOR ASSEMBLY	HUNTINGTON	12
6		THREADED STUD 1/4-28 UNF X 1 1/4	SST	11
6		HEX NUT 1/4-28 UNF	SST	10
6		FLAT WASHER .265 ID X 1/2 OD X .053	SST	9
1	191004	2 3/4 CF COPPER GASKET	MDC DEL-SEAL	8
1		PRECISION SHOULDER SCR .250 DIA X 5/16	SST 901	7
3		SOC HD CAP SCR #10-32 UNC X 3/4	SST	6
				5
				4
				3
1	155Y520816	FLANGE WELDMENT		2
1	155Y520821	FORK ASSEMBLY		1
--	155Y520820	WIRE SCANNER ACTUATOR ASSEMBLY		--

PARTS LIST/BILL OF MATERIAL

NOTES: UNLESS OTHERWISE SPECIFIED:

101 ABBREVIATIONS PER ASME Y14.38-1999.

201 DIMENSIONING AND TOLERANCING PER ASME Y14.5M-1994.

205 ALL THREADS TO BE UNIFIED CLASS 2.

403 ENGRAVE DRAWING NUMBER & REVISION LETTER, APPROX. WHERE SHOWN, IN .25" HIGH CHARACTERS.

901 PRECISION SHOULDER SCREW WITH #10-32 UNF THREADS

902 VACUUM LEAK CHECK PER SNS 104020400-PR0001-R01.

903 CLEAN, HANDLE & PACKAGE PER SNS 104020500-PR001-R01.

904 TAKE NECESSARY PRECAUTIONS TO PROTECT BELLOWS & SEAL SURFACE OF ALL FLANGES DURING ASSEMBLY, PACKAGING AND SHIPMENT.

SNS DWG No. 104050000-I8D-8200-A820-R00

DRAWING LEVEL: PRODUCTION

UNCLASSIFIED

UNLESS OTHERWISE SPECIFIED: DIMENSIONS ARE IN INCHES.
TOLERANCES ARE:
DECIMALS .X: ±.1 .XX: ±.01 .XXX: ±.005
ANGULAR: ±.25°
MACHINED FINISH: 125

NEXT ASSEMBLY USED ON
APPLICATION

TASK CONTRACTOR

CAD SYSTEM & VER. UNIGRAPHICS V16.0/IMAN

SEE FINAL DESIGN AUTHORIZATION SHEET FOR SIGNATURES. SHEET IS FILED BY DRAWING NUMBER AT THE SNS PROJECT OFFICE.

	APPROVALS	DATE	GROUP
DESIGNED	D. SATTLER	08-14-01	SNS-3
DRAWN	D. SATTLER	08-14-01	SNS-3
CHECKED	R. MEYER	07-17-02	SNS-3
ENGINEERING	R. MEYER	07-24-02	SNS-3
VACUUM	B. GILLES	07-24-02	LANCE-2
PHYSICS	M. PLUM	07-24-02	SNS-3
APPROVED	N. BULTMAN	07-24-02	SNS-3

Los Alamos National Laboratory
Los Alamos, New Mexico 87545
SNS DIVISION

PROJECT: SNS

SNS DIAGNOSTICS CCL WIRE SCANNER ACTUATOR ASSEMBLY

SIZE	CAGE CODE	DWG NO. & CAD FILENAME	REV
D	88516	155Y520820	-A

SCALE 1/2 DO NOT SCALE SHEET 1 OF 1