REVISION RECORD			
LTR	ECO NO.	APPROVED	DATE

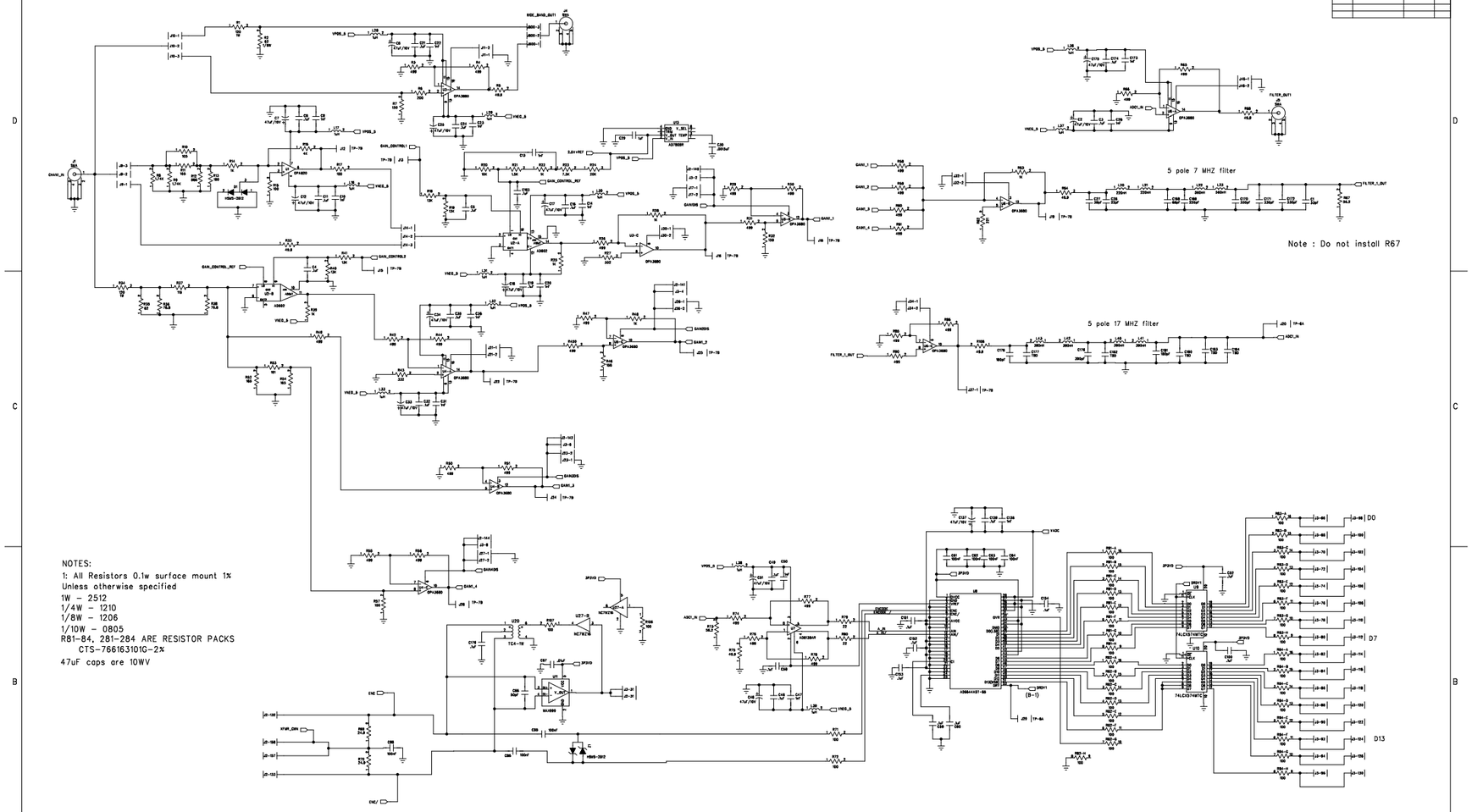

NOTES:
1: All Resistors 0.1w surfoce mount 1%
Unless otherwise specified
1W - 2512
1/4W - 1210
1/8W - 1206
1/10W - 0805
R81-84, 281-284 ARE RESISTOR PACKS
CTS-766163101G-2%
47uF caps are 10WV

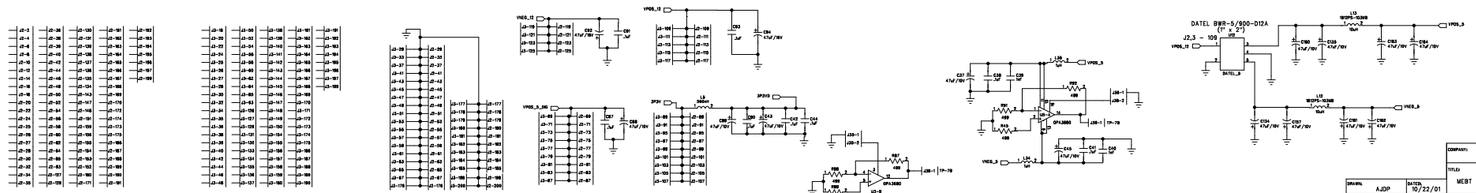

COMPANY:	BROOKHAVEN NATIONAL LAB		
TITLE:	MEBT BCM AFE CONTROL LOGIC AND CONNECTOR INTERFACE		
DRAWN: A.JOP	DATE: 10/22/01		
CHECKED:	DATE:		
QUALITY CONTROL:	DATE:		
RELEASED:	DATE:		
CODE:	SIZE:	DRAWING NO:	REV: C
SCALE:		SHEET: 1 OF 2	

REVISION RECORD			
LTR	ECO NO.	APPROVED:	DATE:

NOTES:
1: All Resistors 0.1w surface mount 1%
Unless otherwise specified
1W - 2512
1/4W - 1210
1/8W - 1206
1/10W - 0805
R65-68 ARE RESISTOR PACKS
CTS-766163101G-2%

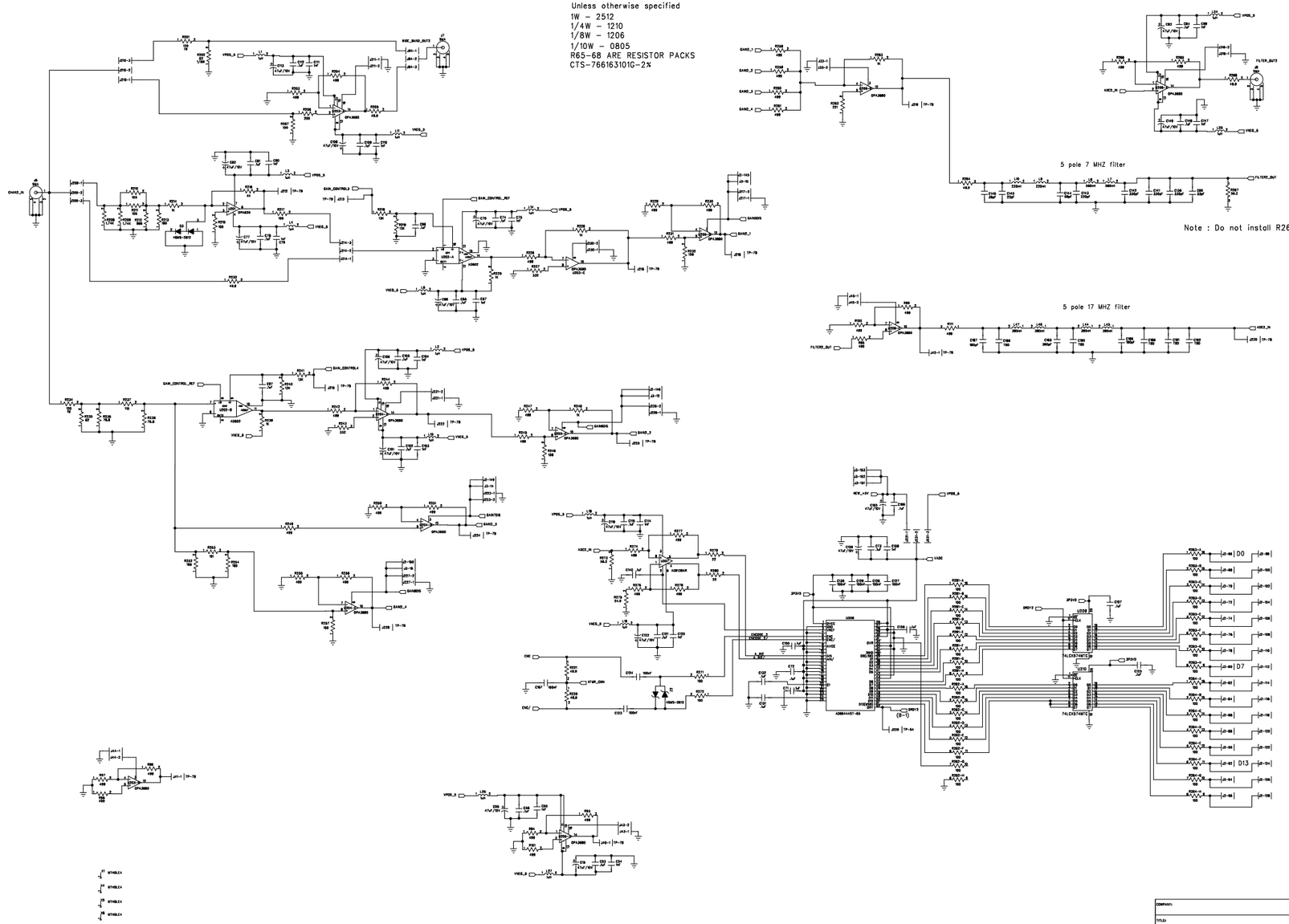

DRAWN: AJDP	DATE: 10/22/01	COMPANY:	
CHECKED:	DATE:	TITLE: BCM ELECTRONICS	
QUALITY CONTROL:	DATE:	CODE: / SIZE: / DRAWING NO:	REV: C
RELEASED:	DATE:	SCALE:	SHEET: 2 OF 2

REVISION RECORD			
LTR	ECO NO.	APPROVED:	DATE:

NOTE:

CHOOSE J2 or J3 for best layout

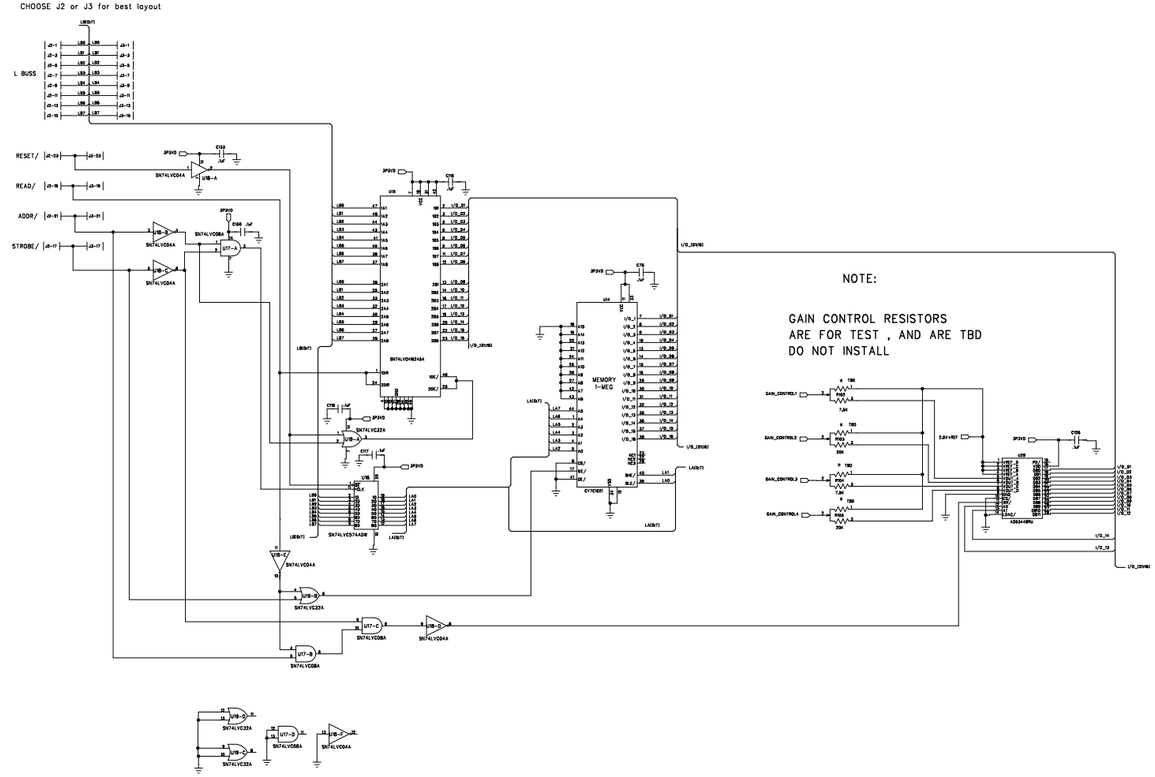

NOTE:

GAIN CONTROL RESISTORS
ARE FOR TEST , AND ARE TBD
DO NOT INSTALL

DRAWN:	DATE:	COMPANY:			
		TITLE:			
CHECKED:	DATE:	CODE:	SIZE:	DRAWING NO:	REV:
QUALITY CONTROL:	DATE:				
RELEASED:	DATE:	SCALE:		SHEET: OF	