SNS SCL BPMs

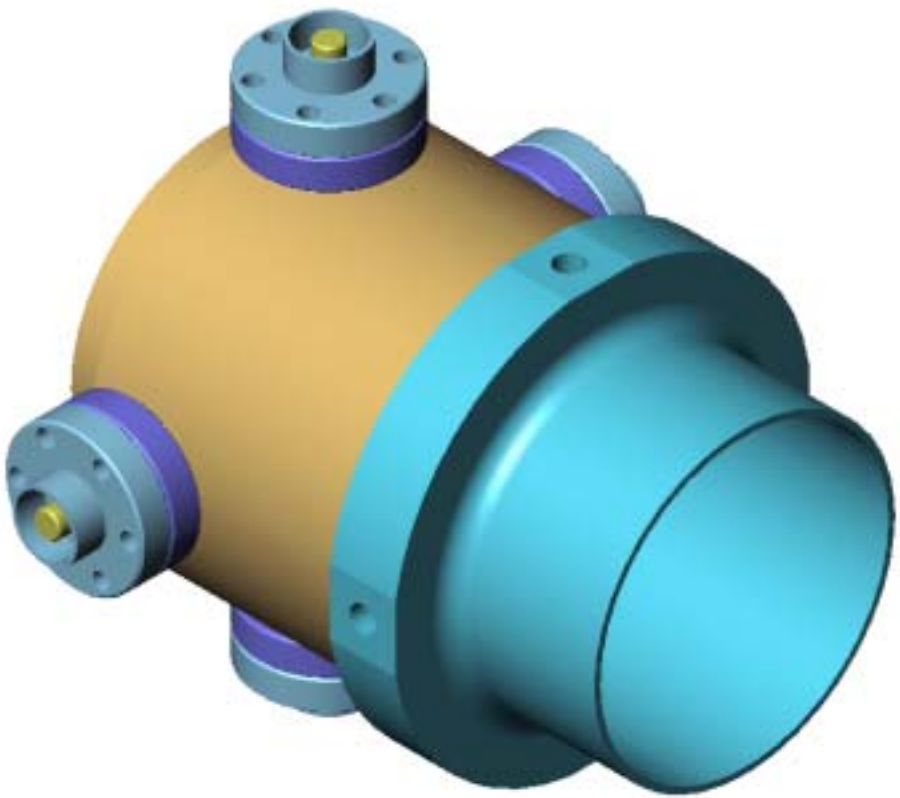

- Drawings included:
- 155Y520107
- 155Y520130
- 155Y520131
- 155Y520132
- 155Y520133
- 155Y520134

REVISIONS						
ZONE	REV	DESCRIPTION	CHANGED BY	DATE	CLASS REVIEW	APPROVED
---	A	ORIGINAL ISSUE	-------	--------	NR	---
---	B	REVISED PER ECN No. 144	SATTLER	04-18-02	NR	JFO

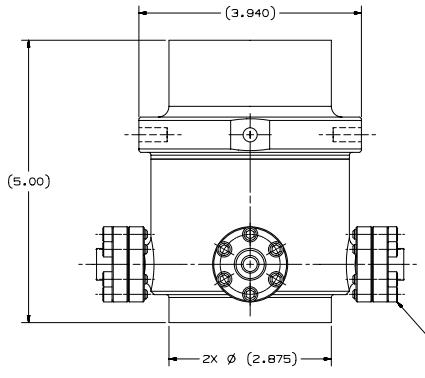

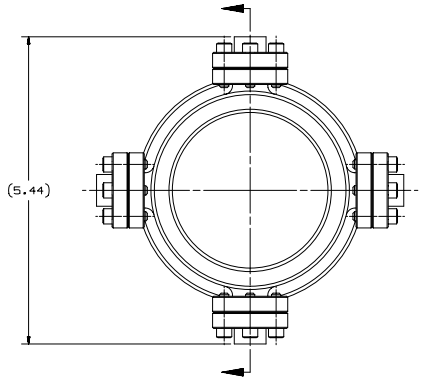

LOOKING UPSTREAM

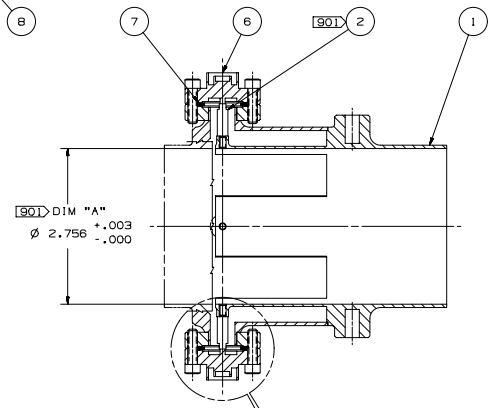

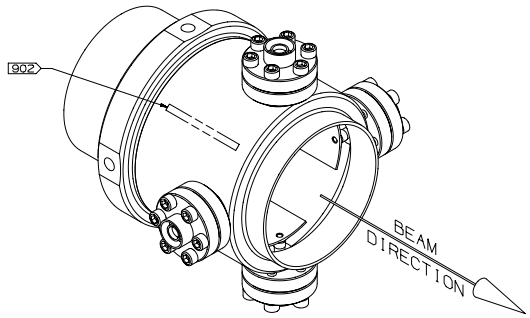

ISOMETRIC VIEW
SCALE NONE

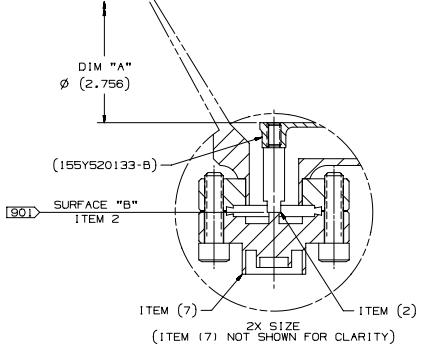

2X SIZE
(ITEM (7) NOT SHOWN FOR CLARITY)

NOTES: UNLESS OTHERWISE SPECIFIED

101 ABBREVIATIONS PER ASME Y14.38-1999.

102 THOROUGHLY CLEAN PARTS TO REMOVE ALL OIL, GREASE, DIRT, CHIPS, ETC.

201 DIMENSIONING AND TOLERANCING PER ASME Y14.5M-1994.

214 CONTACT OF ANY MATERIAL CONTAINING FREE SILICON WITH THIS PART DURING FABRICATION, INSPECTION OR STORAGE IS PROHIBITED.

901 FINISH MACHINE SURFACE "B" OF ITEM #2 AS REQUIRED TO OBTAIN DIMENSION "A" WITH ITEM #6 INSTALLED 4 PLACES. DIMENSION "A" OF PART NUMBER 155Y520133-B SHALL BE CONCENTRIC WITH PART NUMBER 155Y520132-B AND CONTACT MUST BE MAINTAINED BETWEEN ITEM #2 AND ITEM #6 INDEPENDENTLY AT ASSEMBLY. DIMENSIONAL RELATIONSHIP TO BE MEASURED AT THE CENTERLINE OF ITEM #6.

902 LASER MARK DRAWING NUMBER, REVISION LETTER & SERIAL NUMBER, APPROXIMATELY WHERE SHOWN, IN .13" HIGH CHARACTERS.

903 FINAL ASSEMBLY SHALL BE LEAK TIGHT. LEAK RATE TO BE ESTABLISHED WITH A MASS SPECTROMETER TYPE LEAK DETECTOR. THE INSTRUMENT USED SHALL BE IDENTIFIED. CALIBRATION DATA SUPPLIED SHOULD INCLUDE "SENSITIVITY", AND "STANDARD LEAK SIZE." NO DETECTABLE LEAK USING A MSLD HAVING A SENSITIVITY OF 2 X 10^{-9} ATM cc/sec (HELIUM). CALIBRATION DATA INCLUDING SENS AND STD LEAK SIZE WILL BE INCLUDED.

QTY REQD	PART OR IDENTIFYING NO.	NOMENCLATURE OR DESCRIPTION	MATERIAL SPECIFICATION	ITEM NO
24		SOC HD CAP SCR #8-32 UNC-2A X 5/8	SST	8
4	191000	OHFC COPPER GASKET	MDC DEL-SEAL	7
4	853890-001	SMA-F UHV CONN ASSY FEEDTHRU	KAMAN	6
				5
				4
				3
4	155Y520134-B	PROBE		2
1	155Y520131-B	SUB-ASSEMBLY		1
-	155Y520130-B	ASSEMBLY		-

PARTS LIST/BILL OF MATERIAL

DRAWING LEVEL: PRODUCTION

UNCLASSIFIED

TASK CONTRACTOR

CAD SYSTEM & VER.: UNIGRAPHICS V-16

SEE FINAL DESIGN AUTHORIZATION SHEET FOR SIGNATURES; SHEET IS FILED BY DRAWING NUMBER AT THE SNS PROJECT OFFICE.

UNLESS OTHERWISE SPECIFIED: DIMENSIONS ARE IN INCHES. TOLERANCES ARE:
DECIMALS .X= ±.1 .XX= ±.01 .XXX= ±.005
ANGULAR= ±.25°
MACHINED: 125 FINISH

	APPROVALS	DATE	GROUP
DESIGNED			
DRAWN	H. SALAZAR	6-28-01	SNS-3
CHECKED	C. COMBS	7-31-01	ESA-DE
ENGINEERING	J. O'HARA	7-19-01	SNS-3
VACUUM			
PHYSICS	S. KURENNOY	7-21-01	SNS-DO
APPROVED	M. PLUM	7-21-01	SNS-DO

NEXT ASSEMBLY USED ON
APPLICATION

SNS DWG No. 104050000-I8E-8200-A130-R01

Los Alamos National Laboratory
Los Alamos, New Mexico 87545
SNS DIVISION

PROJECT: SNS

BPM
35.0 mM RADIUS
ASSEMBLY

SIZE	CAGE CODE	DWG NO. & CAD FILENAME	REV
D	88516	155Y520130	-B

SCALE 1/1 DO NOT SCALE SHEET 1 OF 1

REVISIONS						
ZONE	REV	DESCRIPTION	CHANGED BY	DATE	CLASS REVIEW	APPROVED
---	A	ORIGINAL ISSUE	-------	--------	NR	---
---	B	REVISED PER ECN No. 144	SATTLER	04-18-02	NR	JFO

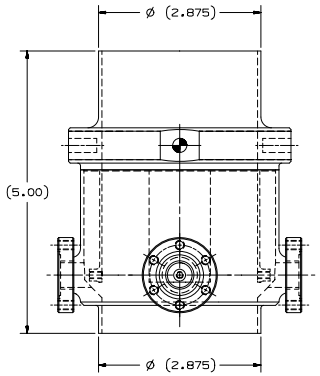

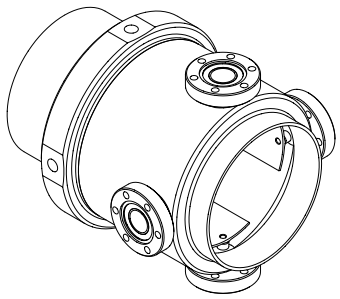

ISOMETRIC VIEW
(STEP 2: WELD AND LEAK TEST)
SCALE: NONE

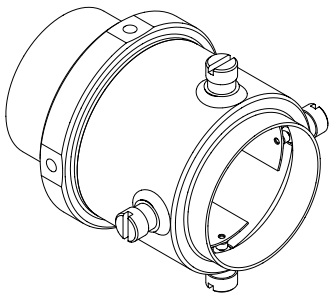

ISOMETRIC VIEW
(STEP 1: ELECTRON WELD AND ANNEAL)
SCALE: NONE

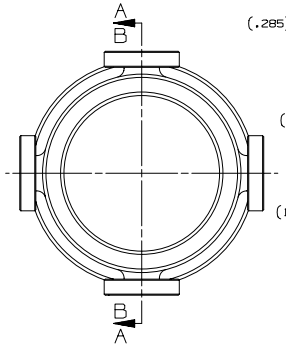

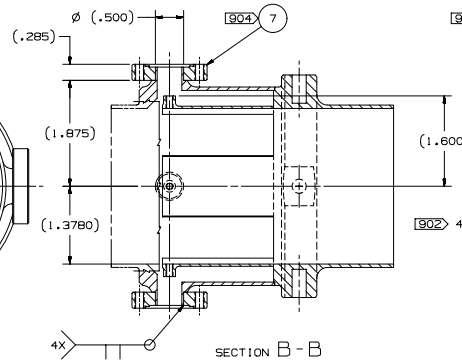

SECTION B-B
(STEP 2: WELD AND LEAK TEST)

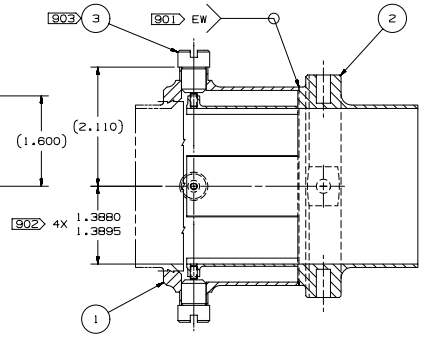

SECTION A-A
(STEP 1: ELECTRON WELD AND ANNEAL)

NOTES: UNLESS OTHERWISE SPECIFIED

101 ABBREVIATIONS PER ASME Y14.38-1999.

102 THOROUGHLY CLEAN PARTS TO REMOVE ALL OIL, GREASE, DIRT, CHIPS, ETC.

201 DIMENSIONING AND TOLERANCING PER ASME Y14.5M-1994.

208 REMOVE BURRS AND SHARP EDGES TO .010 MAX.

214 CONTACT OF ANY MATERIAL CONTAINING FREE SILICON WITH THIS PART DURING FABRICATION, INSPECTION OR STORAGE IS PROHIBITED.

301 WELDING SYMBOLS PER AWS A2.4-1998.

321 WELD IN ACCORDANCE WITH AWS D1.6-1999.

401 BAG AND TAG PART WITH DRAWING NUMBER & REVISION LETTER.

901 ELECTRON WELD IN ACCORDANCE WITH MIL-STD-1595A.

902 DEFLECT EACH SPRING MEMBER OF ITEM #2 TO DIMENSION SHOWN BY ADJUSTING ITEM #3 AS REQUIRED. FOUR PLACES INDEPENDENTLY. ANNEAL PARTS AT 1000°C ±10°C. DIMENSIONAL RELATIONSHIP MEASURED AT CENTERLINE OF ITEM #3.

903 REMOVE ITEM #3 (4) PLACES AFTER ELECTRON WELD AND ANNEAL OPERATIONS.

904 TAKE NECESSARY PRECAUTIONS TO PROTECT SEAL SURFACE OF FLANGE DURING WELDING, TESTING & PACKAGING. LEAVE SEAL SURFACE SHARP.

905 FINAL ASSEMBLY SHALL BE LEAK TIGHT. LEAK RATE TO BE ESTABLISHED WITH A MASS SPECTROMETER TYPE LEAK DETECTOR. THE INSTRUMENT USED SHALL BE IDENTIFIED. CALIBRATION DATA SUPPLIED SHOULD INCLUDE "SENSITIVITY", AND "STANDARD LEAK SIZE." NO DETECTABLE LEAK USING A MSLD HAVING A SENSITIVITY OF 2 X 10⁻⁸ ATM cc/sec (HELIUM). CALIBRATION DATA INCLUDING SENS AND STD LEAK SIZE WILL BE INCLUDED.

QTY REQD	PART OR IDENTIFYING NO.	NOMENCLATURE OR DESCRIPTION	MATERIAL SPECIFICATION	ITEM NO
4	130003	1.33 NON-ROTATABLE TAPPED FLANGE	MDC DEL-SEAL	7
				6
				5
				4
4	155Y520107-B	ALIGNMENT PLUG		3
1	155Y520133-B	ELECTRODE		2
1	155Y520132-B	COVER		1
-	155Y520131-B	SUB-ASSEMBLY		-

PARTS LIST/BILL OF MATERIAL

DRAWING LEVEL: PRODUCTION

UNCLASSIFIED

TASK CONTRACTOR

CAD SYSTEM & VER.: UNIGRAPHICS V-16

SEE FINAL DESIGN AUTHORIZATION SHEET FOR SIGNATURES; SHEET IS FILED BY DRAWING NUMBER AT THE SNS PROJECT OFFICE.

UNLESS OTHERWISE SPECIFIED: DIMENSIONS ARE IN INCHES. TOLERANCES ARE:
DECIMALS .X= ±.1 .XX= ±.01 .XXX= ±.005
ANGULAR= ±.25°
MACHINED: 125 FINISH

APPROVALS		DATE	GROUP
DESIGNED	H. SALAZAR	6-28-01	SNS-3
DRAWN	H. SALAZAR	6-28-01	SNS-3
CHECKED	C. COMBS	7-31-01	ESA-DE
ENGINEERING	J. O'HARA	7-19-01	SNS-3
VACUUM			
PHYSICS	S. KURENNOY	7-21-01	SNS-DO
APPROVED	M. PLUM	7-21-01	SNS-DO

155Y520130-B
NEXT ASSEMBLY USED ON
APPLICATION

SNS DWG No.
104050000-I8E-8200-A131-R01

Los Alamos National Laboratory
Los Alamos, New Mexico 87545
SNS DIVISION

PROJECT: SNS

BPM
35.0 mM RADIUS
SUB-ASSEMBLY

SIZE	CAGE CODE	DWG NO. & CAD FILENAME	REV
D	88516	155Y520131	-B

SCALE 1/1 DO NOT SCALE SHEET 1 OF 1

REVISIONS						
ZONE	REV	DESCRIPTION	CHANGED BY	DATE	CLASS REVIEW	APPROVED
---	A	ORIGINAL ISSUE	-------	--------	NR	---
---	B	REVISED PER ECN No. 144	SATTLER	04-18-02	NR	JFO

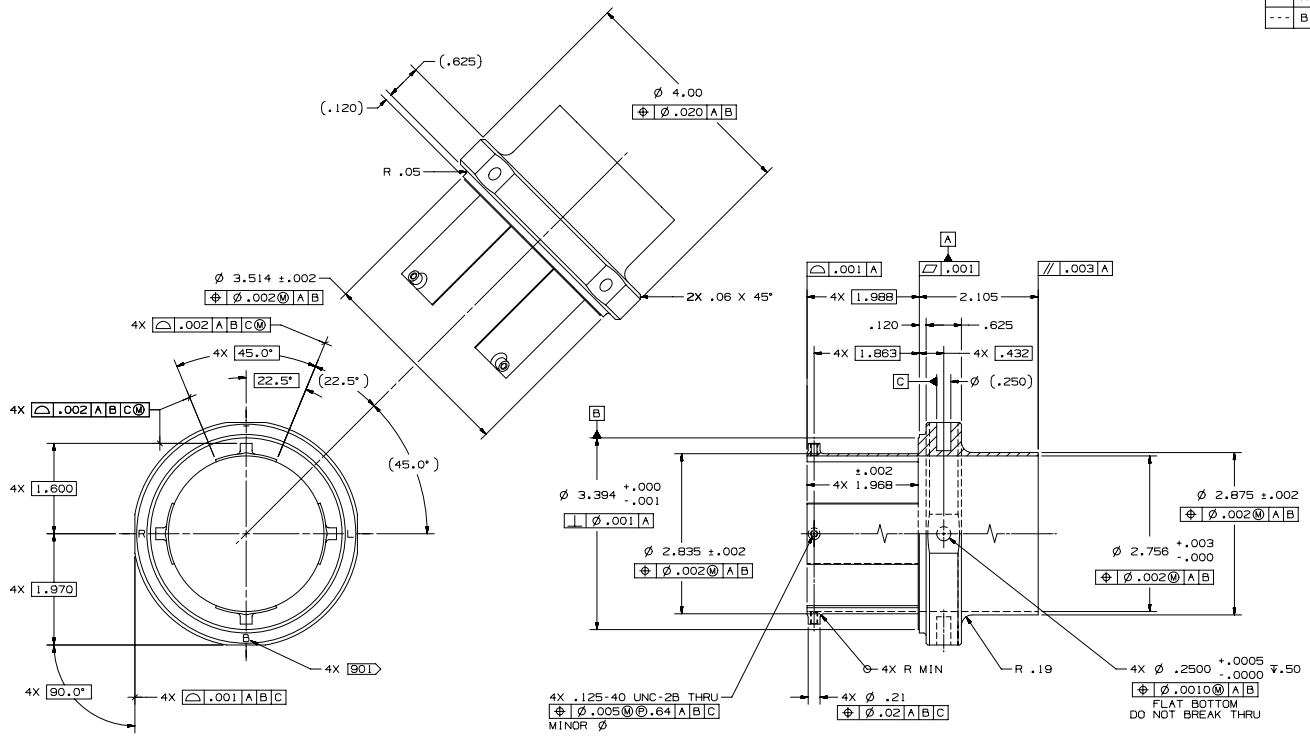

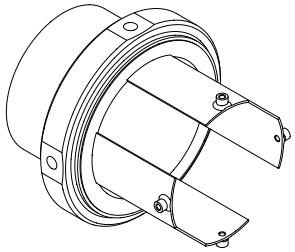

ISOMETRIC VIEW
SCALE: NONE

NOTES: UNLESS OTHERWISE SPECIFIED

101 ABBREVIATIONS PER ASME Y14.38-1999.

102 THOROUGHLY CLEAN PARTS TO REMOVE ALL OIL, GREASE, DIRT, CHIPS, ETC.

201 DIMENSIONING AND TOLERANCING PER ASME Y14.5M-1994

203 SURFACE TEXTURE PER ASME B46.1-1995.

204 ALL INSIDE CORNERS TO BE R.010 MAX.

206 C'SINK ALL TAPPED HOLES 100°, TO MAJOR DIA.

208 REMOVE BURRS AND SHARP EDGES TO .010 MAX.

210 SULFUR BASED CUTTING OILS SHALL NOT BE USED.

214 CONTACT OF ANY MATERIAL CONTAINING FREE SILICON WITH THIS PART DURING FABRICATION, INSPECTION, OR STORAGE IS PROHIBITED.

401 BAG AND TAG PART WITH DRAWING NUMBER & REVISION LETTER.

901 LASER MARK ORIENTATION LETTER APPROXIMATELY WHERE SHOWN IN .13" HIGH CHARACTERS, 4 PLACES.

SNS DWG No. 104050000-I8E-8200-A133-R01

QTY REQD	PART OR IDENTIFYING NO.	NOMENCLATURE OR DESCRIPTION	MATERIAL SPECIFICATION	ITEM NO
--	155Y520133-B	ELECTRODE	304L SST	--

PARTS LIST/BILL OF MATERIAL

DRAWING LEVEL: PRODUCTION

UNCLASSIFIED

TASK CONTRACTOR

CAD SYSTEM & VER.: UNIGRAPHICS V-16

SEE FINAL DESIGN AUTHORIZATION SHEET FOR SIGNATURES; SHEET IS FILED BY DRAWING NUMBER AT THE SNS PROJECT OFFICE.

UNLESS OTHERWISE SPECIFIED: DIMENSIONS ARE IN INCHES. TOLERANCES ARE:
DECIMALS .X= ±.1 .XX= ±.01 .XXX= ±.005
ANGULAR= ±.25°
MACHINED: 125 FINISH

155Y520131-B
NEXT ASSEMBLY USED ON
APPLICATION

APPROVALS		DATE	GROUP
DESIGNED	H. SALAZAR	6-22-01	SNS-3
DRAWN	H. SALAZAR	6-22-01	SNS-3
CHECKED	C. COMBS	7-31-01	ESA-DE
ENGINEERING	J. O'HARA	7-19-01	SNS-3
VACUUM			
PHYSICS	S. KURENNOY	7-21-01	SNS-DO
APPROVED	M. PLUM	7-21-01	SNS-DO

Los Alamos National Laboratory
Los Alamos, New Mexico 87545
SNS DIVISION

PROJECT: SNS

BPM
35.0 mM RADIUS
ELECTRODE

SIZE	CAGE CODE	DWG NO. & CAD FILENAME	REV
D	88516	155Y520133	B

SCALE 1/1 — DO NOT SCALE — SHEET 1 OF 1

REVISIONS						
ZONE	REV	DESCRIPTION	CHANGED BY	DATE	CLASS REVIEW	APPROVED
---	A	ORIGINAL ISSUE	-------	--------	NR	---
---	B	REVISED PER ECN No. 144	SATTLER	04-18-02	NR	JFO

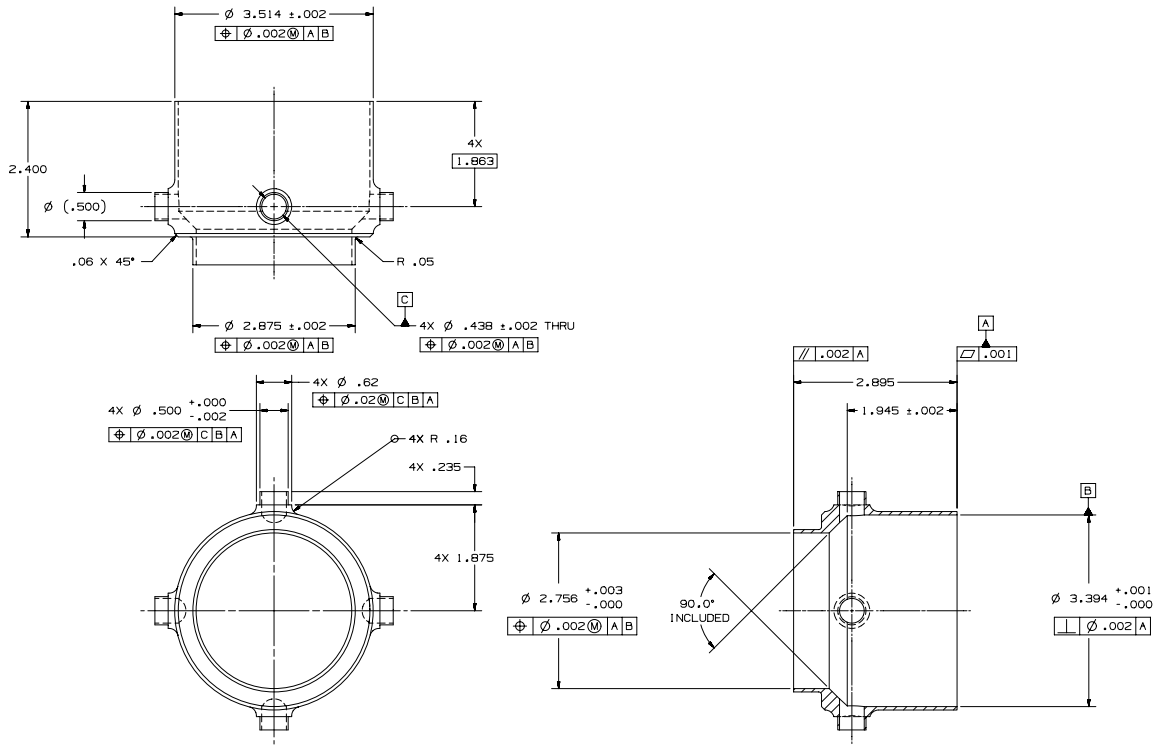

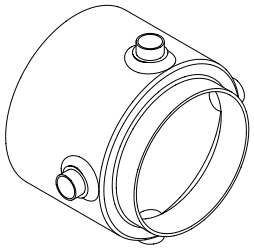

ISOMETRIC VIEW
SCALE: NONE

NOTES: UNLESS OTHERWISE SPECIFIED

101 ABBREVIATIONS PER ASME Y14.38-1999.

102 THOROUGHLY CLEAN PARTS TO REMOVE ALL OIL, GREASE, DIRT, CHIPS, ETC.

201 DIMENSIONING AND TOLERANCING PER ASME Y14.5M-1994

203 SURFACE TEXTURE PER ASME B46.1-1995.

208 REMOVE BURRS AND SHARP EDGES TO .010 MAX.

210 SULFUR BASED CUTTING OILS SHALL NOT BE USED.

214 CONTACT OF ANY MATERIAL CONTAINING FREE SILICON WITH THIS PART DURING FABRICATION, INSPECTION, OR STORAGE IS PROHIBITED.

401 BAG AND TAG PART WITH DRAWING NUMBER & REVISION LETTER.

SNS DWG No. 104050000-I8E-8200-A132-R01

QTY REQD	PART OR IDENTIFYING NO.	NOMENCLATURE OR DESCRIPTION	MATERIAL SPECIFICATION	ITEM NO
--	155Y520132-B	COVER	304L SST	--

PARTS LIST/BILL OF MATERIAL

DRAWING LEVEL: PRODUCTION

UNCLASSIFIED

TASK CONTRACTOR

CAD SYSTEM & VER.: UNIGRAPHICS V-16

SEE FINAL DESIGN AUTHORIZATION SHEET FOR SIGNATURES; SHEET IS FILED BY DRAWING NUMBER AT THE SNS PROJECT OFFICE.

UNLESS OTHERWISE SPECIFIED: DIMENSIONS ARE IN INCHES. TOLERANCES ARE:
DECIMALS .X= ±.1 .XX= ±.01 .XXX= ±.005
ANGULAR= ±.25°
MACHINED: 125 FINISH

APPROVALS		DATE	GROUP
DESIGNED	H. SALAZAR	6-21-01	SNS-3
DRAWN	H. SALAZAR	6-21-01	SNS-3
CHECKED	C. COMBS	7-31-01	ESA-DE
ENGINEERING	J. O'HARA	7-19-01	SNS-3
VACUUM			
PHYSICS	S. KURENNOY	7-21-01	SNS-DO
APPROVED	M. PLUM	7-21-01	SNS-DO

155Y520131-B
NEXT ASSEMBLY USED ON
APPLICATION

Los Alamos National Laboratory
Los Alamos, New Mexico 87545
SNS DIVISION

PROJECT: SNS

BPM
35.0 mM RADIUS
COVER

SIZE	CAGE CODE	DWG NO. & CAD FILENAME	REV
D	88516	155Y520132	-B

SCALE 1/1 DO NOT SCALE SHEET 1 OF 1

REVISIONS						
ZONE	REV	DESCRIPTION	CHANGED BY	DATE	CLASS REVIEW	APPROVED
---	A	ORIGINAL ISSUE	-------	--------	NR	---
---	B	REVISED PER ECN No. 144	SATTLER	04-18-02	NR	JFO

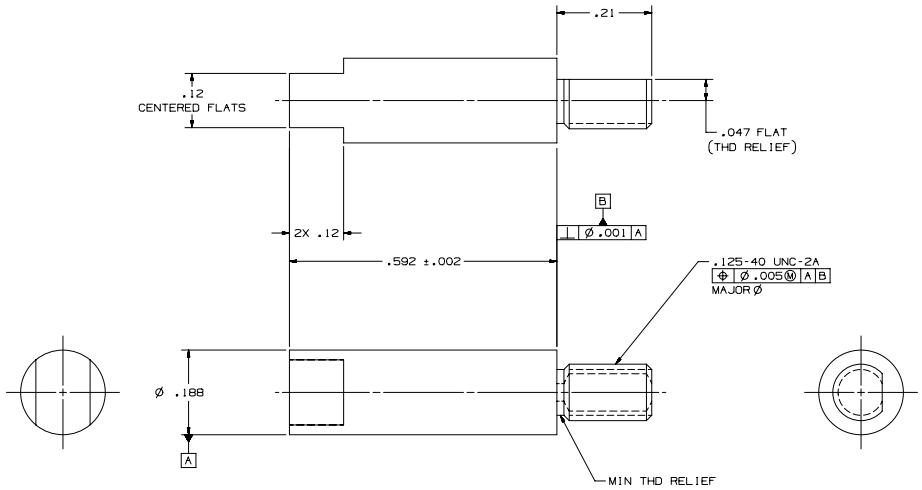

ISOMETRIC VIEW
SCALE: NONE

NOTES: UNLESS OTHERWISE SPECIFIED

101 ABBREVIATIONS PER ASME Y14.38-1999.

102 THOROUGHLY CLEAN PARTS TO REMOVE ALL OIL, GREASE, DIRT, CHIPS, ETC.

201 DIMENSIONING AND TOLERANCING PER ASME Y14.5M-1994

203 SURFACE TEXTURE PER ASME B46.1-1995.

204 ALL INSIDE CORNERS TO BE R.010 MAX.

208 REMOVE BURRS AND SHARP EDGES TO .010 MAX.

210 SULFUR BASED CUTTING OILS SHALL NOT BE USED.

214 CONTACT OF ANY MATERIAL CONTAINING FREE SILICON WITH THIS PART DURING FABRICATION, INSPECTION, OR STORAGE IS PROHIBITED.

401 BAG AND TAG PART WITH DRAWING NUMBER & REVISION LETTER.

SNS DWG No. 104050000-I8E-8200-A134-R01

QTY REQD	PART OR IDENTIFYING NO.	NOMENCLATURE OR DESCRIPTION	MATERIAL SPECIFICATION	ITEM NO
--	155Y520134-B	PROBE	304L SST	--

PARTS LIST/BILL OF MATERIAL

DRAWING LEVEL: PRODUCTION

UNCLASSIFIED

TASK CONTRACTOR

CAD SYSTEM & VER.: UNIGRAPHICS V-16

SEE FINAL DESIGN AUTHORIZATION SHEET FOR SIGNATURES; SHEET IS FILED BY DRAWING NUMBER AT THE SNS PROJECT OFFICE.

UNLESS OTHERWISE SPECIFIED: DIMENSIONS ARE IN INCHES. TOLERANCES ARE:
DECIMALS .X= ±.1 .XX= ±.01 .XXX= ±.005
ANGULAR= ±.25°
MACHINED: 125 FINISH

APPROVALS		DATE	GROUP
DESIGNED	H. SALAZAR	6-22-01	SNS-3
DRAWN	H. SALAZAR	6-22-01	SNS-3
CHECKED	C. COMBS	7-31-01	ESA-DE
ENGINEERING	J. O'HARA	7-19-01	SNS-3
VACUUM			
PHYSICS	S. KURENNOY	7-21-01	SNS-DO
APPROVED	M. PLUM	7-21-01	SNS-DO

155Y520130-B ---------
NEXT ASSEMBLY USED ON
APPLICATION

Los Alamos National Laboratory
Los Alamos, New Mexico 87545
SNS DIVISION

PROJECT: SNS

BPM
35.0 mM RADIUS
PROBE DETAIL

SIZE	CAGE CODE	DWG NO. & CAD FILENAME	REV
D	88516	155Y520134	-B

SCALE 8/1 DO NOT SCALE SHEET 1 OF 1

REVISIONS						
ZONE	REV	DESCRIPTION	CHANGED BY	DATE	CLASS REVIEW	APPROVED
---	A	ORIGINAL ISSUE	-------	--------	NR	---
---	B	REVISED PER ECN No. 144	SATTLER	04-18-02	NR	JFO

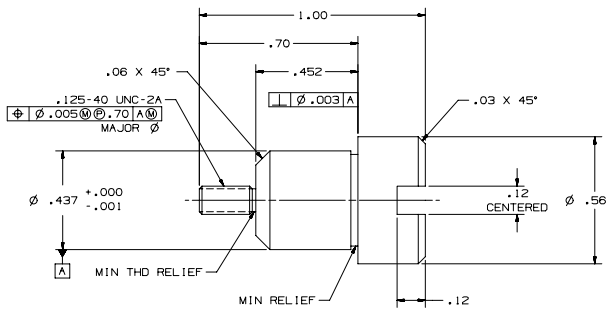

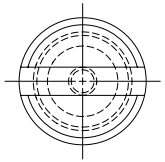

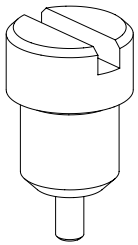

ISOMETRIC VIEW
SCALE: NONE

101 ABBREVIATIONS PER ASME Y14.38-1999.
102 THOROUGHLY CLEAN PARTS TO REMOVE ALL OIL, GREASE, DIRT, CHIPS, ETC.
201 DIMENSIONING AND TOLERANCING PER ASME Y14.5M-1994.
203 SURFACE TEXTURE PER ASME B46.1-1995.
204 ALL INSIDE CORNERS TO BE R.010 MAX.
208 REMOVE BURRS AND SHARP EDGES TO .010 MAX.
210 SULFUR BASED CUTTING OILS SHALL NOT BE USED.
214 CONTACT OF ANY MATERIAL CONTAINING FREE SILICON WITH THIS PART DURING FABRICATION, INSPECTION, OR STORAGE IS PROHIBITED.
401 BAG AND TAG PART WITH DRAWING NUMBER & REVISION LETTER.

SNS DWG No. 104050000-I8E-8200-A107-R01

QTY REQD	PART OR IDENTIFYING NO.	NOMENCLATURE OR DESCRIPTION	MATERIAL SPECIFICATION	ITEM NO
--	155Y520107-B	ALIGNMENT PLUG	304L SST	--

PARTS LIST/BILL OF MATERIAL

DRAWING LEVEL: PRODUCTION

UNCLASSIFIED

TASK CONTRACTOR

CAD SYSTEM & VER.: UNIGRAPHICS V-16

SEE FINAL DESIGN AUTHORIZATION SHEET FOR SIGNATURES; SHEET IS FILED BY DRAWING NUMBER AT THE SNS PROJECT OFFICE.

UNLESS OTHERWISE SPECIFIED: DIMENSIONS ARE IN INCHES. TOLERANCES ARE:
DECIMALS .X= ±.1 .XX= ±.01 .XXX= ±.005
ANGULAR= ±.25°
MACHINED: 125 FINISH

APPROVALS		DATE	GROUP
DESIGNED	H. SALAZAR	9-27-00	SNS-3
DRAWN	H. SALAZAR	9-27-00	SNS-3
CHECKED	C. COMBS	6-27-01	ESA-DE
ENGINEERING	J. O'HARA	6-28-01	SNS-3
VACUUM	B. GILLES	6-28-01	SNS-3
PHYSICS			
APPROVED			

155Y520101-B ---------- NEXT ASSEMBLY USED ON
APPLICATION

Los Alamos SNS DIVISION
Los Alamos National Laboratory
Los Alamos, New Mexico 87545

PROJECT: SNS

BPM
15.0mm RADIUS
ALIGNMENT PLUG

SIZE	CAGE CODE	DWG NO. & CAD FILENAME	REV
D	88516	155Y520107	-B

SCALE 4/1 DO NOT SCALE SHEET 1 OF 1