REVISIONS						
ZONE	REV	DESCRIPTION	CHANGED BY	DATE	CLASS REVIEW	APPROVED
---	A	ORIGINAL ISSUE	-------	--------	NR	---
---	B	DIM "A", "B", & "C" CHNAGE	HRS	4-25-01	NR	O'OHARA

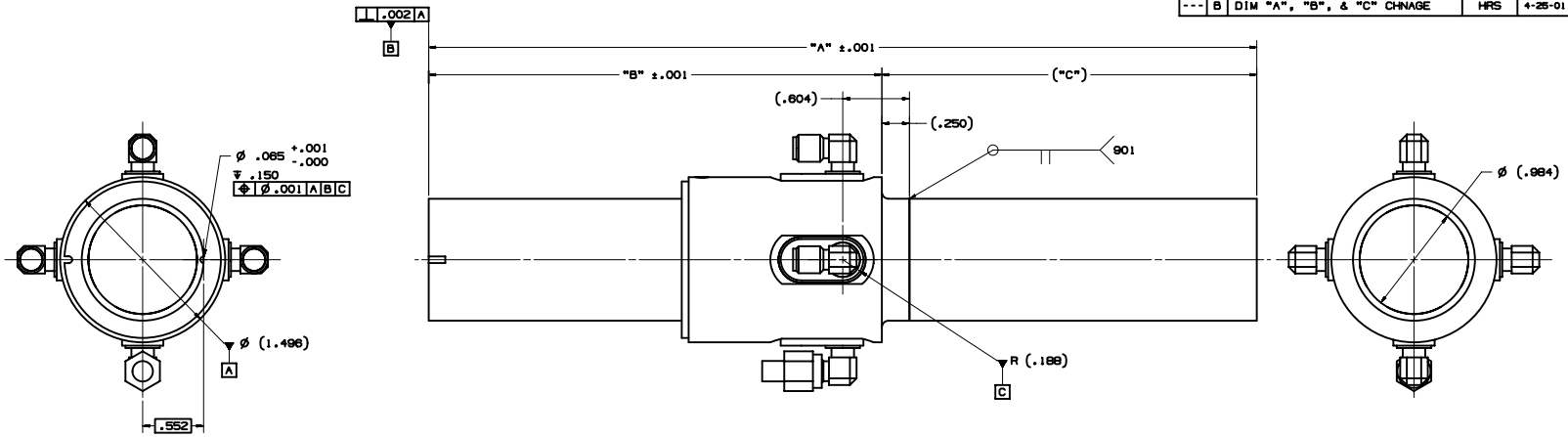

DRAWING NO	SNS DRAWING NO.	TANK	DRIFT TUBE	DIM "A"	DIM "B"	(DIM "C")
155Y520137	104050000-I8E-8200-A137-R00	2	3	2.7768	1.8740	(0.9028)
155Y520138	104050000-I8E-8200-A138-R00	2	9	2.9989	1.8740	(1.1249)
155Y520139	104050000-I8E-8200-A139-R00	3	2	4.4140	2.4035	(2.0105)
155Y520140	104050000-I8E-8200-A140-R00	3	8	4.5959	2.4945	(2.1015)
155Y520141	104050000-I8E-8200-A141-R00	4	3	5.5734	2.9832	(2.5902)
155Y520142	104050000-I8E-8200-A142-R00	4	9	5.7322	3.0626	(2.6696)
155Y520143	104050000-I8E-8200-A143-R00	5	1	6.2941	3.3436	(2.9506)
155Y520144	104050000-I8E-8200-A144-R00	5	7	6.3903	3.3917	(2.9987)
155Y520145	104050000-I8E-8200-A145-R00	6	3	6.8165	3.6048	(3.2118)
155Y520146	104050000-I8E-8200-A146-R00	6	9	6.9007	3.6469	(3.2539)

B

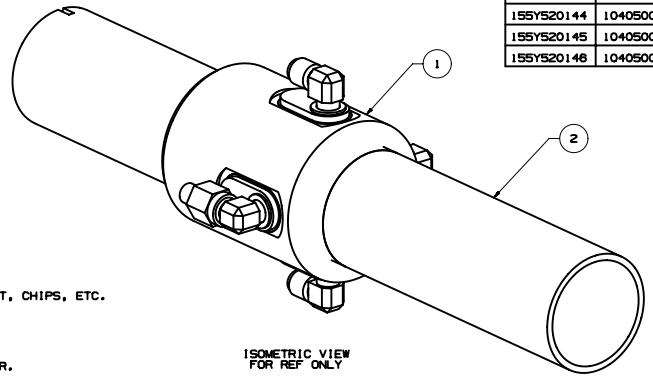

ISOMETRIC VIEW
FOR REF ONLY

101 ABBREVIATIONS PER ASME Y14.38-1999.
102 THOROUGHLY CLEAN PARTS TO REMOVE ALL OIL, GREASE, DIRT, CHIPS, ETC.
201 DIMENSIONING AND TOLERANCING PER ASME Y14.5M-1994.
203 SURFACE TEXTURE PER ASME B46.1-1995.
204 ALL INSIDE CORNERS TO BE R.010 MAX.
208 REMOVE BURRS AND SHARP EDGES TO .010 MAX.
401 BAG AND TAG PART WITH DRAWING NUMBER & REVISION LETTER.
901 FINAL ASSEMBLY SHALL BE LEAK TIGHT. LEAK RATE TO BE ESTABLISHED WITH A MASS SPECTROMETER TYPE LEAK DETECTOR THE INSTRUMENT USED SHALL BE IDENTIFIED. THE LEAK DETECTOR SHALL HAVE A CALIBRATION MINIMUM SENSITIVITY FOR HELIUM OF 2.0×10^{-10} STD. CC/SEC.

QTY REQD	PART OR IDENTIFYING NO.	NOMENCLATURE OR DESCRIPTION	MATERIAL SPECIFICATION	ITEM NO
1	155Y520147	TUBE EXTENSION		2
1	155Y520124	BPM ASSEMBLY		1

PARTS LIST/BILL OF MATERIAL

DRAWING LEVEL: ----------

UNCLASSIFIED

UNLESS OTHERWISE SPECIFIED, DIMENSIONS ARE IN INCHES. TOLERANCES ARE:
DECIMALS .X= ±.1 .XX= ±.01 .XXX= ±.005
ANGULAR= ±.25°
MACHINED: 125 FINISH

SNS DWG No. 104050000-I8E-8200-A129-R00

NEXT ASSEMBLY USED ON
APPLICATION

TASK CONTRACTOR

CAD SYSTEM & VER. ----------

SEE FINAL DESIGN AUTHORIZATION SHEET FOR SIGNATURES; SHEET IS FILED BY DRAWING NUMBER AT THE SNS PROJECT OFFICE.

APPROVALS		DATE	GROUP
DESIGNED	H. SALAZAR	2-22-01	SNS-3
DRAWN	H. SALAZAR	2-22-01	SNS-3
CHECKED	G. VALDEZ	3-29-01	ESA-DE
ENGINEERING	J. O'HARA	3-29-01	SNS-3
VACUUM	R. GILLIS	3-29-01	SNS-3
PHYSICS	S. KURENNOY	3-29-01	SNS-DO
APPROVED	M. PLUM	3-29-01	SNS-DO

Los Alamos National Laboratory
Los Alamos, New Mexico 87545
Los Alamos SNS DIVISION

PROJECT: SNS

BPM 12.5 mm RADIUS FINAL ASSEMBLY

SIZE	CAGE CODE	DWG NO. & CAD FILENAME	REV
D	88516	155Y520129	B

SCALE 2/1 DO NOT SCALE SHEET 1 OF 1

REVISIONS						
ZONE	REV	DESCRIPTION	CHANGED BY	DATE	CLASS REVIEW	APPROVED
---	A	ORIGINAL ISSUE	--------	--------	NR	---
---	--	----------	--------	--------	NR	---

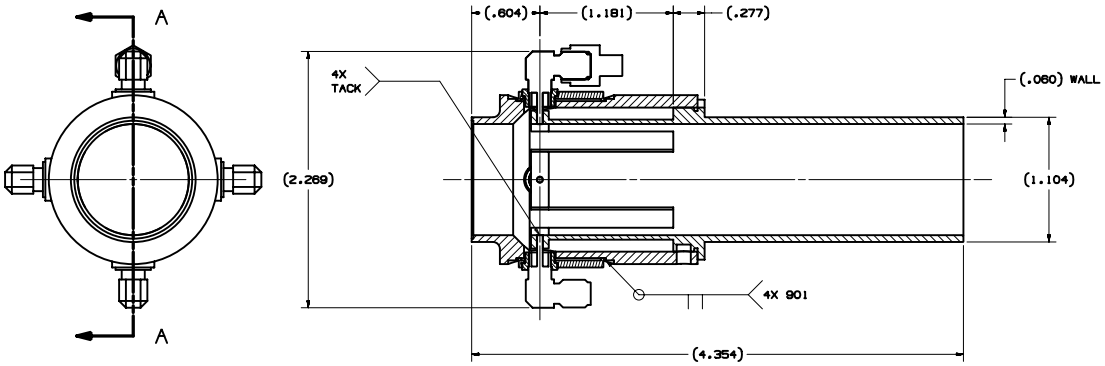

SECTION A - A

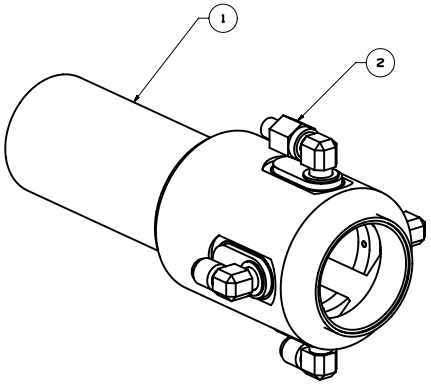

ISOMETRIC VIEW
FOR REFERENCE ONLY

101 ABBREVIATIONS PER ASME Y14.38-1999.
102 THOROUGHLY CLEAN PARTS TO REMOVE ALL OIL, GREASE, DIRT, CHIPS, ETC.
201 DIMENSIONING AND TOLERANCING PER ASME Y14.5M-1994.
203 SURFACE TEXTURE PER ASME B46.1-1995.
208 REMOVE BURRS AND SHARP EDGES TO .010 MAX.
401 BAG AND TAG PART WITH DRAWING NUMBER & REVISION LETTER.
901 FINAL ASSEMBLY SHALL BE LEAK TIGHT. LEAK RATE TO BE ESTABLISHED WITH A MASS SPECTROMETER TYPE LEAK DETECTOR THE INSTRUMENT USED SHALL BE IDENTIFIED. THE LEAK DETECTOR SHALL HAVE A CALIBRATION MINIMUM SENSITIVITY FOR HELIUM OF 2.0×10^{-10} STD. CC/SEC.

QTY REQD	PART OR IDENTIFYING NO.	NOMENCLATURE OR DESCRIPTION	MATERIAL SPECIFICATION	ITEM NO
4	155Y520120	CONNECTOR WELDMENT	----------	2
1	155Y520125	BRAZE SUBASSEMBLY	----------	1

PARTS LIST/BILL OF MATERIAL

DRAWING LEVEL: ----------

UNCLASSIFIED

TASK CONTRACTOR

CAD SYSTEM & VER. ----------

SEE FINAL DESIGN AUTHORIZATION SHEET FOR SIGNATURES; SHEET IS FILED BY DRAWING NUMBER AT THE SNS PROJECT OFFICE.

UNLESS OTHERWISE SPECIFIED: DIMENSIONS ARE IN INCHES. TOLERANCES ARE:
DECIMALS .X= ±.1 .XX= ±.01 .XXX= ±.005
ANGULAR= ±.25°
MACHINED: 125
FINISH

APPROVALS		DATE	GROUP
DESIGNED	H. SALAZAR	1-29-01	SNS-3
DRAWN	H. SALAZAR	1-29-01	SNS-3
CHECKED	G. VALDEZ	3-29-01	ESA-DE
ENGINEERING	J. O'HARA	3-29-01	SNS-3
VACUUM	R. GILLIS	3-29-01	SNS-3
PHYSICS	S. KURENNOY	3-29-01	SNS-DO
APPROVED	M. PLUM	3-29-01	SNS-DO

NEXT ASSEMBLY USED ON
APPLICATION

SNS DWG No. 104050000-I8E-8200-A124-R00

Los Alamos
SNS DIVISION
Los Alamos National Laboratory
Los Alamos, New Mexico 87545

PROJECT: SNS

BPM 12.5 mm RADIUS ASSEMBLY

SIZE	CAGE CODE	DWG NO. & CAD FILENAME	REV
D	88516	155Y520124	-A

SCALE 4/1 DO NOT SCALE SHEET 1 OF 1

REVISIONS						
ZONE	REV	DESCRIPTION	CHANGED BY	DATE	CLASS REVIEW	APPROVED
---	A	ORIGINAL ISSUE	--------	--------	NR	---
---	--	----------	--------	--------	NR	---

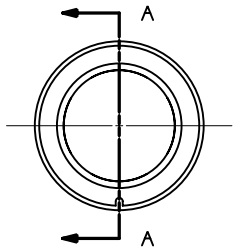

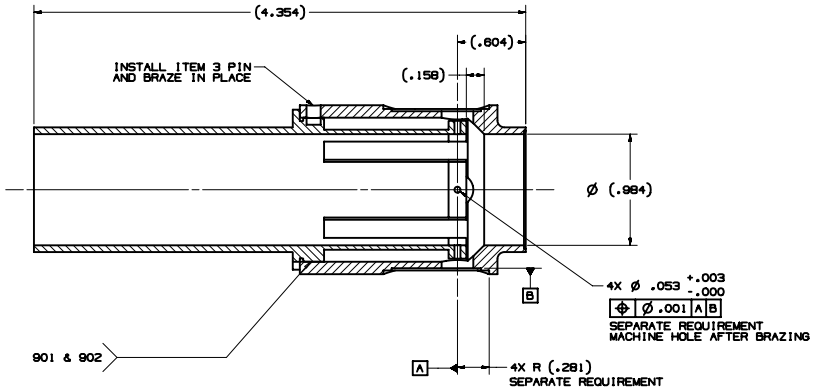

SECTION A - A

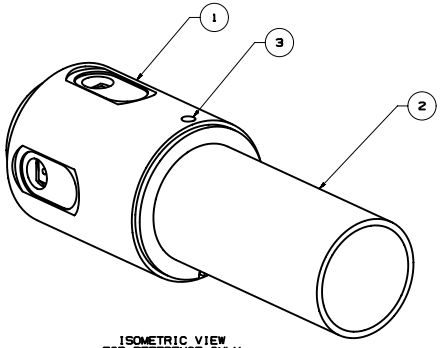

ISOMETRIC VIEW FOR REFERENCE ONLY

101 ABBREVIATIONS PER ASME Y14.38-1999.
102 THOROUGHLY CLEAN PARTS TO REMOVE ALL OIL, GREASE, DIRT, CHIPS, ETC.
201 DIMENSIONING AND TOLERANCING PER ASME Y14.5M-1994.
203 SURFACE TEXTURE PER ASME B46.1-1995.
208 REMOVE BURRS AND SHARP EDGES TO .010 MAX.
401 BAG AND TAG PART WITH DRAWING NUMBER & REVISION LETTER.
901 FINAL ASSEMBLY SHALL BE LEAK TIGHT. LEAK RATE TO BE ESTABLISHED WITH A MASS SPECTROMETER TYPE LEAK DETECTOR THE INSTRUMENT USED SHALL BE IDENTIFIED. THE LEAK DETECTOR SHALL HAVE A CALIBRATION MINIMUM SENSITIVITY FOR HELIUM OF 2.0 X 10-10 STD. CC/SEC.
902 BRAZE USING BRAZE ALLOY SIMULAR OR EQUAL TO WESGO METALS "CUSIL" (72% Ag 28% Cu). LIQUIDUS 780° C.

QTY REQD	PART OR IDENTIFYING NO.	NOMENCLATURE OR DESCRIPTION	MATERIAL SPECIFICATION	ITEM NO
1	155Y520128	PIN	-	3
1	155Y520127	ELECTRODE DETAIL	-	2
1	155Y520126	COVER DETAIL	-	1

PARTS LIST/BILL OF MATERIAL

DRAWING LEVEL: ----------

UNCLASSIFIED

TASK CONTRACTOR

CAD SYSTEM & VER. ----------

SEE FINAL DESIGN AUTHORIZATION SHEET FOR SIGNATURES; SHEET IS FILED BY DRAWING NUMBER AT THE SNS PROJECT OFFICE.

UNLESS OTHERWISE SPECIFIED: DIMENSIONS ARE IN INCHES. TOLERANCES ARE:
DECIMALS .X= ±.1 .XX= ±.01 .XXX= ±.005
ANGULAR= ±.25° MACHINED: 125 FINISH

APPROVALS		DATE	GROUP
DESIGNED	H. SALAZAR	1-29-01	SNS-3
DRAWN	H. SALAZAR	1-29-01	SNS-3
CHECKED	G. VALDEZ	3-29-01	ESA-DE
ENGINEERING	J. O'HARA	3-29-01	SNS-3
VACUUM	R. GILLIS	3-29-01	SNS-3
PHYSICS	S. KURENNOY	3-29-01	SNS-DO
APPROVED	M. PLUM	3-29-01	SNS-DO

NEXT ASSEMBLY USED ON: ---------- ----------
APPLICATION

SNS DWG No. 104050000-I8E-8200-A125-R00

Los Alamos National Laboratory
Los Alamos, New Mexico 87545
SNS DIVISION

PROJECT: SNS

BPM 12.5 mm RADIUS BRAZE SUBASSEMBLY

SIZE	CAGE CODE	DWG NO. & CAD FILENAME	REV
D	88516	155Y520125	-A

SCALE 2/1 DO NOT SCALE SHEET 1 OF 1

REVISIONS						
ZONE	REV	DESCRIPTION	CHANGED BY	DATE	CLASS REVIEW	APPROVED
---	A	ORIGINAL ISSUE	-------	--------	NR	---
---	B	REDESIGNED SLOT	HRS	10-16-01	NR	O'HARA

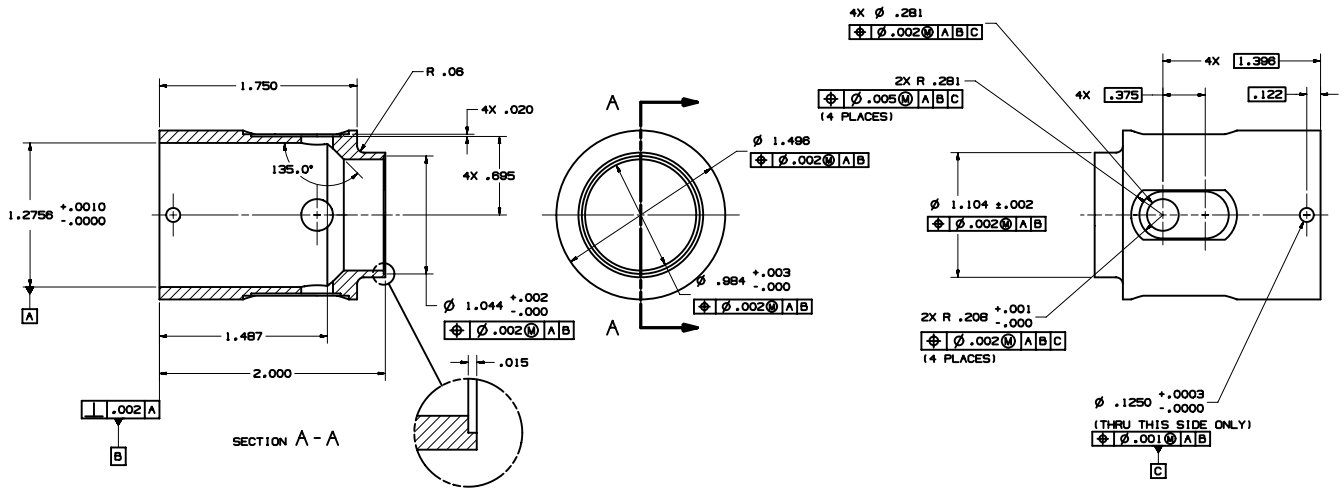

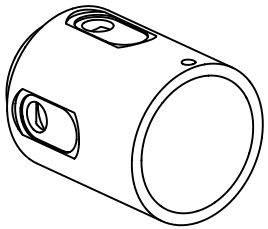

ISOMETRIC VIEW
FOR REFERENCE ONLY

101 ABBREVIATIONS PER ASME Y14.38-1999.
102 THOROUGHLY CLEAN PARTS TO REMOVE ALL OIL, GREASE, DIRT, CHIPS, ETC.
201 DIMENSIONING AND TOLERANCING PER ASME Y14.5M-1994.
203 SURFACE TEXTURE PER ASME B46.1-1995.
204 ALL INSIDE CORNERS TO BE R.010 MAX.
208 REMOVE BURRS AND SHARP EDGES TO .010 MAX.
401 BAG AND TAG PART WITH DRAWING NUMBER & REVISION LETTER.

QTY REQD	PART OR IDENTIFYING NO.	NOMENCLATURE OR DESCRIPTION	MATERIAL SPECIFICATION	ITEM NO
--	155Y502126	COVER	OFE COPPER PER ASTM F68-82 CLASS 2 OR BETTER	--

PARTS LIST/BILL OF MATERIAL

DRAWING LEVEL: ----------

UNCLASSIFIED

TASK CONTRACTOR

CAD SYSTEM & VER. ----------

SEE FINAL DESIGN AUTHORIZATION SHEET FOR SIGNATURES; SHEET IS FILED BY DRAWING NUMBER AT THE SNS PROJECT OFFICE.

UNLESS OTHERWISE SPECIFIED, DIMENSIONS ARE IN INCHES. TOLERANCES ARE:
DECIMALS .X= ±.1 .XX= ±.01 .XXX= ±.005
ANGULAR= ±.25°
MACHINED: 125 FINISH

APPROVALS		DATE	GROUP
DESIGNED	H. SALAZAR	1-29-01	SNS-3
DRAWN	H. SALAZAR	1-29-01	SNS-3
CHECKED	G. VALDEZ	3-29-01	ESA-DE
ENGINEERING	J. O'HARA	3-29-01	SNS-3
VACUUM	R. GILLIS	3-29-01	SNS-3
PHYSICS	S. KURENNOY	3-29-01	SNS-DO
APPROVED	M. PLUM	3-29-01	SNS-DO

NEXT ASSEMBLY USED ON
APPLICATION

SNS DWG No. 104050000-I8E-8200-A126-R01

Los Alamos National Laboratory
Los Alamos, New Mexico 87545
SNS DIVISION

PROJECT: SNS

BPM 12.5 mm RADIUS
COVER DETAIL

SIZE	CAGE CODE	DWG NO. & CAD FILENAME	REV
D	88516	155Y520126	-B

SCALE 2/1 DO NOT SCALE SHEET 1 OF 1

REVISIONS						
ZONE	REV	DESCRIPTION	CHANGED BY	DATE	CLASS REVIEW	APPROVED
---	A	ORIGINAL ISSUE	-------	--------	NR	---
---	B	CORRECTED GROOVE WIDTH DIM.	HRS	6-5-01	NR	

101 ABBREVIATIONS PER ASME Y14.38-1999.
102 THOROUGHLY CLEAN PARTS TO REMOVE ALL OIL, GREASE, DIRT, CHIPS, ETC.
201 DIMENSIONING AND TOLERANCING PER ASME Y14.5M-1994.
203 SURFACE TEXTURE PER ASME B46.1-1995.
204 ALL INSIDE CORNERS TO BE R.010 MAX.
208 REMOVE BURRS AND SHARP EDGES TO .010 MAX.
401 BAG AND TAG PART WITH DRAWING NUMBER & REVISION LETTER.

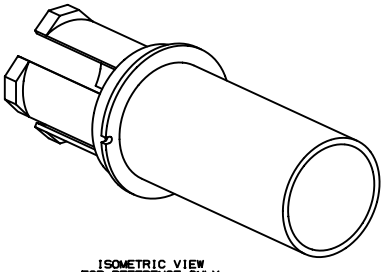

ISOMETRIC VIEW
FOR REFERENCE ONLY

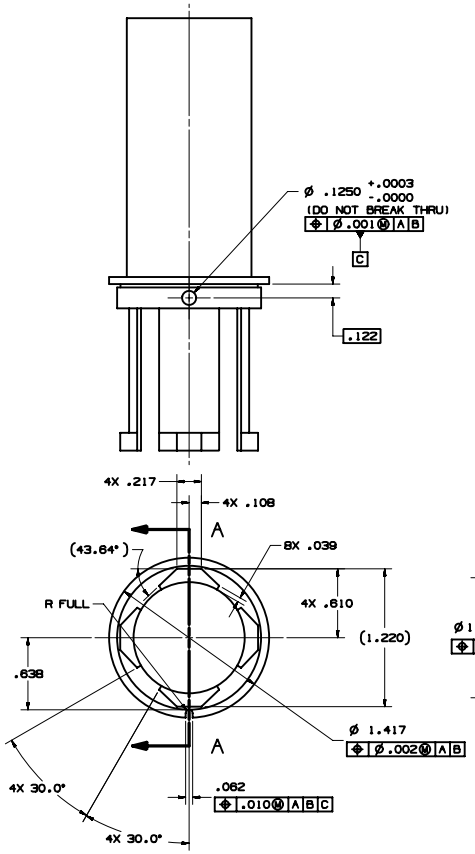

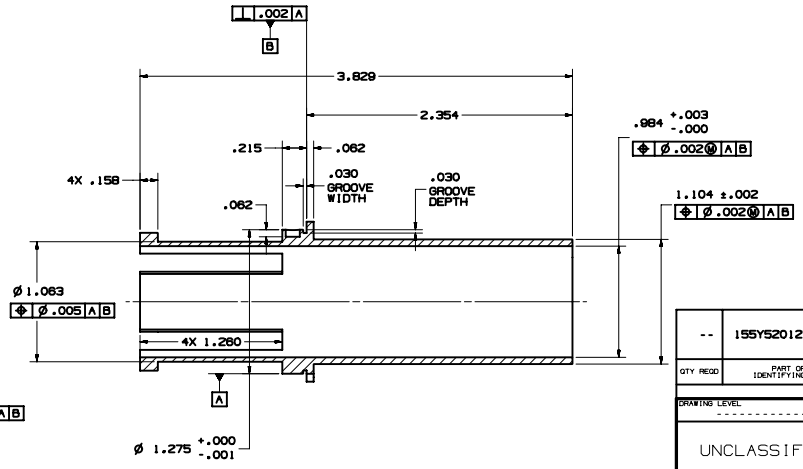

SECTION A-A

QTY REQD	PART OR IDENTIFYING NO.	NOMENCLATURE OR DESCRIPTION	MATERIAL SPECIFICATION	ITEM NO
--	155Y520127	ELECTRODE	OFE COPPER PER ASTM F68-82 CLASS 2 OR BETTER	--

PARTS LIST/BILL OF MATERIAL

DRAWING LEVEL: ----------

UNCLASSIFIED

TASK CONTRACTOR

CAD SYSTEM & VER. ----------

SEE FINAL DESIGN AUTHORIZATION SHEET FOR SIGNATURES; SHEET IS FILED BY DRAWING NUMBER AT THE SNS PROJECT OFFICE.

UNLESS OTHERWISE SPECIFIED, DIMENSIONS ARE IN INCHES. TOLERANCES ARE:
DECIMALS .X= ±.1 .XX= ±.01 .XXX= ±.005
ANGULAR= ±.25°
MACHINED: 125 FINISH

APPROVALS		DATE	GROUP
DESIGNED	H. SALAZAR	1-29-01	SNS-3
DRAWN	H. SALAZAR	1-29-01	SNS-3
CHECKED	G. VALDEZ	3-29-01	ESA-DE
ENGINEERING	J. O'HARA	3-29-01	SNS-3
VACUUM	R. GILLIS	3-29-01	SNS-3
PHYSICS	S. KURENNOY	3-29-01	SNS-DO
APPROVED	M. PLUM	3-29-01	SNS-DO

NEXT ASSEMBLY USED ON
APPLICATION

SNS DWG No. 104050000-I8E-8200-A127-R00

Los Alamos National Laboratory
Los Alamos, New Mexico 87545
SNS DIVISION

PROJECT: SNS

BPM 12.5 mm RADIUS ELECTRODE DETAIL

SIZE	CAGE CODE	DWG NO. & CAD FILENAME	REV
D	88516	155Y520127	B

SCALE 2/1 DO NOT SCALE SHEET 1 OF 1

REVISIONS						
ZONE	REV	DESCRIPTION	CHANGED BY	DATE	CLASS REVIEW	APPROVED
---	A	ORIGINAL ISSUE	--------	--------	NR	---
---	--	----------	--------	--------	NR	---

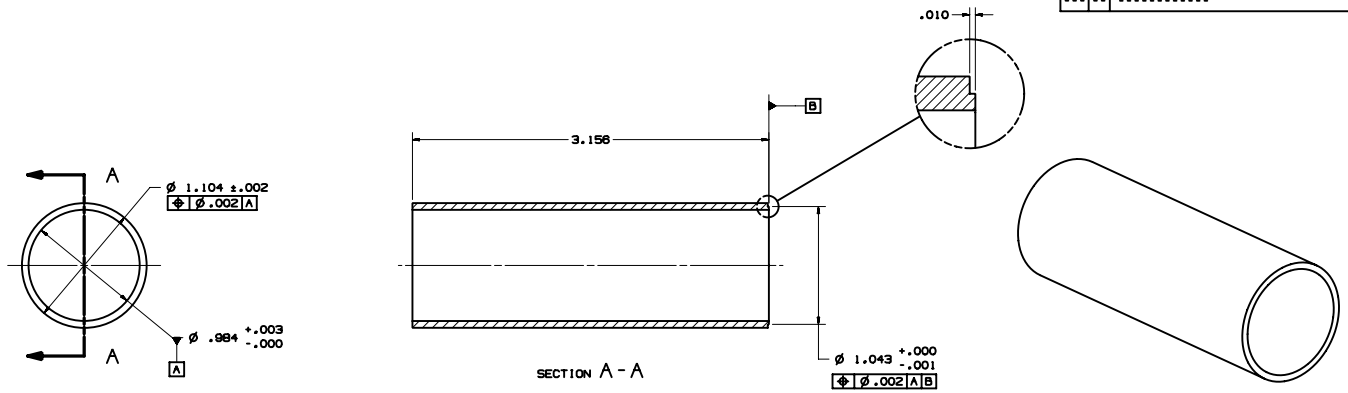

101 ABBREVIATIONS PER ASME Y14.38-1999.
102 THOROUGHLY CLEAN PARTS TO REMOVE ALL OIL, GREASE, DIRT, CHIPS, ETC.
201 DIMENSIONING AND TOLERANCING PER ASME Y14.5M-1994.
203 SURFACE TEXTURE PER ASME B46.1-1995.
204 ALL INSIDE CORNERS TO BE R.010 MAX.
208 REMOVE BURRS AND SHARP EDGES TO .010 MAX.
401 BAG AND TAG PART WITH DRAWING NUMBER & REVISION LETTER.

QTY REQD	PART OR IDENTIFYING NO.	NOMENCLATURE OR DESCRIPTION	MATERIAL SPECIFICATION	ITEM NO
	155Y520147	TUBE EXTENSION	OFE COPPER PER ASTM F68-82 CLASS 2 OR BETTER	

PARTS LIST/BILL OF MATERIAL

DRAWING LEVEL: ----------

UNCLASSIFIED

TASK CONTRACTOR

CAD SYSTEM & VER. ----------

SEE FINAL DESIGN AUTHORIZATION SHEET FOR SIGNATURES; SHEET IS FILED BY DRAWING NUMBER AT THE SNS PROJECT OFFICE.

UNLESS OTHERWISE SPECIFIED, DIMENSIONS ARE IN INCHES. TOLERANCES ARE:
DECIMALS .X= ±.1 .XX= ±.01 .XXX= ±.005
ANGULAR= ±.25°
MACHINED FINISH: 125

	APPROVALS	DATE	GROUP
DESIGNED	H. SALAZAR	3-13-01	SNS-3
DRAWN	H. SALAZAR	3-13-01	SNS-3
CHECKED			
ENGINEERING			
VACUUM			
PHYSICS			
APPROVED			

NEXT ASSEMBLY USED ON: ---------- ----------
APPLICATION

SNS DWG No. 104050000-18E-8200-A147-R00

Los Alamos National Laboratory
Los Alamos, New Mexico 87545
SNS DIVISION

PROJECT: SNS

BPM 12.5mm RADIUS TUBE EXTENSION

SIZE	CAGE CODE	DWG NO. & CAD FILENAME	REV
D	88516	155Y520147	-A

SCALE 2/1 DO NOT SCALE SHEET 1 OF 1

REVISIONS						
ZONE	REV	DESCRIPTION	CHANGED BY	DATE	CLASS REVIEW	APPROVED
---	A	ORIGINAL ISSUE	--------	--------	NR	---
---	--	----------	--------	--------	NR	---

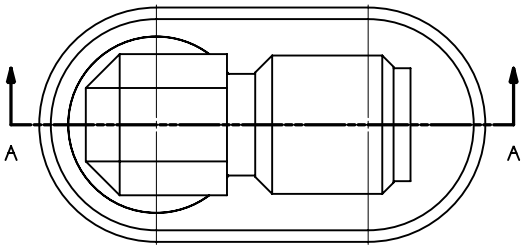

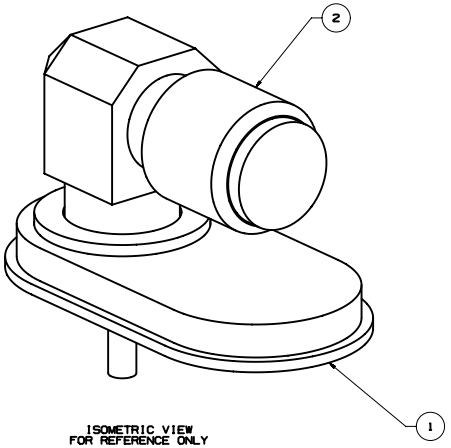

ISOMETRIC VIEW
FOR REFERENCE ONLY

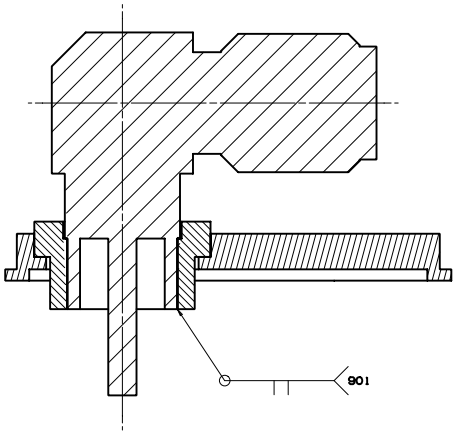

SECTION A - A

101 ABBREVIATIONS PER ASME Y14.38-1999.
102 THOROUGHLY CLEAN PARTS TO REMOVE ALL OIL, GREASE, DIRT, CHIPS, ETC.
201 DIMENSIONING AND TOLERANCING PER ASME Y14.5M-1994.
203 SURFACE TEXTURE PER ASME B46.1-1995.
208 REMOVE BURRS AND SHARP EDGES TO .010 MAX.
401 BAG AND TAG PART WITH DRAWING NUMBER & REVISION LETTER.
901 FINAL ASSEMBLY SHALL BE LEAK TIGHT. LEAK RATE TO BE ESTABLISHED WITH A MASS SPECTROMETER TYPE LEAK DETECTOR THE INSTRUMENT USED SHALL BE IDENTIFIED. THE LEAK DETECTOR SHALL HAVE A CALIBRATION MINIMUM SENSITIVITY FOR HELIUM OF 2.0 X 10^{-10} STD. CC/SEC.

QTY REQD	PART OR IDENTIFYING NO.	NOMENCLATURE OR DESCRIPTION	MATERIAL SPECIFICATION	ITEM NO
1	KAMAN OL855355-001	CONN ASSY, SMA-F 90° FEED THRU		2
1	155Y520121	CONNECTOR INTERFACE	----------	1

PARTS LIST/BILL OF MATERIAL

DRAWING LEVEL: ----------

UNCLASSIFIED

TASK CONTRACTOR

CAD SYSTEM & VER. ----------

SEE FINAL DESIGN AUTHORIZATION SHEET FOR SIGNATURES; SHEET IS FILED BY DRAWING NUMBER AT THE SNS PROJECT OFFICE.

UNLESS OTHERWISE SPECIFIED, DIMENSIONS ARE IN INCHES. TOLERANCES ARE:
DECIMALS .X= ±.1 .XX= ±.01 .XXX= ±.005
ANGULAR= ±.25°
MACHINED: 125 FINISH

APPROVALS		DATE	GROUP
DESIGNED	H. SALAZAR	10-13-00	SNS-3
DRAWN	H. SALAZAR	10-13-00	SNS-3
CHECKED	G. VALDEZ	3-29-01	ESA-DE
ENGINEERING	J. O'HARA	3-29-01	SNS-3
VACUUM	R. GILLIS	3-29-01	SNS-3
PHYSICS	S. KURENNOY	3-29-01	SNS-DO
APPROVED	M. PLUM	3-29-01	SNS-DO

Los Alamos National Laboratory
Los Alamos, New Mexico 87545
Los Alamos SNS DIVISION

PROJECT: SNS

BPM 12.5 mm RADIUS CONNECTOR WELDMENT

SIZE D | CAGE CODE 88516 | DWG NO. & CAD FILENAME 155Y520120 | REV -A

SCALE 10/1 | DO NOT SCALE | SHEET 1 OF 1

SNS DWG No. 104050000-I8E-8200-A120-R00

NEXT ASSEMBLY USED ON ----------
APPLICATION ----------

REVISIONS						
ZONE	REV	DESCRIPTION	CHANGED BY	DATE	CLASS REVIEW	APPROVED
---	A	ORIGINAL ISSUE	-------	--------	NR	---
---	B	REVISED AND REDRAWN	HRS	10-16-01	NR	O'HARA

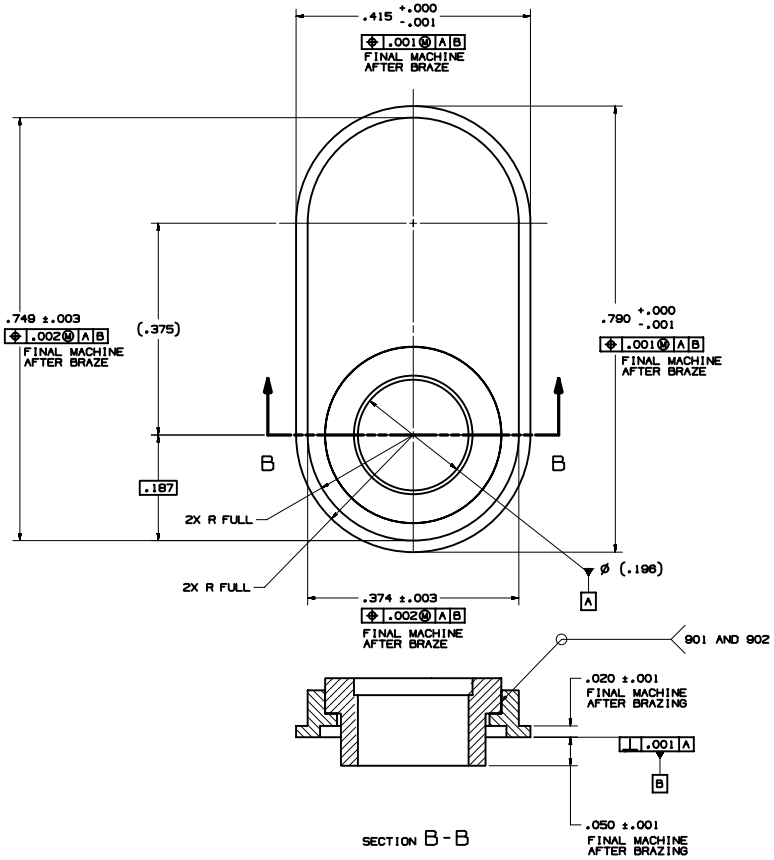

SECTION B-B

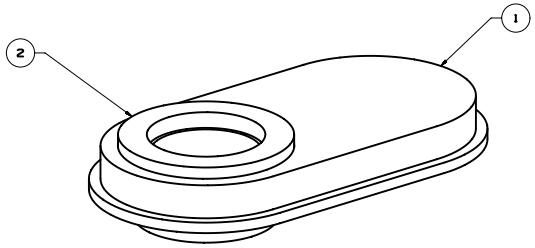

ISOMETRIC VIEW
FOR REFERENCE ONLY

101 ABBREVIATIONS PER ASME Y14.38-1999.
102 THOROUGHLY CLEAN PARTS TO REMOVE ALL OIL, GREASE, DIRT, CHIPS, ETC.
201 DIMENSIONING AND TOLERANCING PER ASME Y14.5M-1994.
203 SURFACE TEXTURE PER ASME B46.1-1995.
204 ALL INSIDE CORNERS TO BE R.010 MAX.
208 REMOVE BURRS AND SHARP EDGES TO .010 MAX.
401 BAG AND TAG PART WITH DRAWING NUMBER & REVISION LETTER.
901 FINAL ASSEMBLY SHALL BE LEAK TIGHT. LEAK RATE TO BE ESTABLISHED WITH A MASS SPECTROMETER TYPE LEAK DETECTOR THE INSTRUMENT USED SHALL BE IDENTIFIED. THE LEAK DETECTOR SHALL HAVE A CALIBRATION MINIMUM SENSITIVITY FOR HELIUM OF 2.0 X 10-10 STD. CC/SEC.
902 BRAZE USING ALLOY SIMULAR OR EQUAL TO WESGO METALS 50 50 (50% GOLD 50% COPPER) LIQUIDUS 970°C.

QTY REQD	PART OR IDENTIFYING NO.	NOMENCLATURE OR DESCRIPTION	MATERIAL SPECIFICATION	ITEM NO
1	155Y520123	CONNECTOR INTERFACE BRACKET	SST	2
1	155Y520122	WELD INTERFACE BRACKET	COPPER	1

PARTS LIST/BILL OF MATERIAL

DRAWING LEVEL: ----------

UNCLASSIFIED

TASK CONTRACTOR

CAD SYSTEM & VER.: ----------

SEE FINAL DESIGN AUTHORIZATION SHEET FOR SIGNATURES; SHEET IS FILED BY DRAWING NUMBER AT THE SNS PROJECT OFFICE.

UNLESS OTHERWISE SPECIFIED, DIMENSIONS ARE IN INCHES. TOLERANCES ARE:
DECIMALS .X= ±.1 .XX= ±.01 .XXX= ±.005
ANGULAR= ±.25°
MACHINED: 125 FINISH

APPROVALS		DATE	GROUP
DESIGNED	H. SALAZAR	10-13-00	SNS-3
DRAWN	H. SALAZAR	10-13-00	SNS-3
CHECKED	G. VALDEZ	3-29-01	ESA-DE
ENGINEERING	J. O'HARA	3-29-01	SNS-3
VACUUM	R. GILLIS	3-29-01	SNS-3
PHYSICS	S. KURENNOY	3-29-01	SNS-DO
APPROVED	M. PLUM	3-29-01	SNS-DO

155Y520120 SNS
NEXT ASSEMBLY USED ON
APPLICATION

SNS DWG No. 104050000-I8E-8200-A121-R01

Los Alamos National Laboratory
Los Alamos, New Mexico 87545
Los Alamos SNS DIVISION

PROJECT: SNS

BPM 12.5 mm RADIUS CONNECTOR INTERFACE

SIZE D | CAGE CODE 88516 | DWG NO. & CAD FILENAME 155Y520121 | REV B
SCALE 10/1 | DO NOT SCALE | SHEET 1 OF 1

REVISIONS						
ZONE	REV	DESCRIPTION	CHANGED BY	DATE	CLASS REVIEW	APPROVED
---	A	ORIGINAL ISSUE	-------	--------	NR	---
C-6	B	DIM .905 WAS .780	HRS	8-1-01	NR	

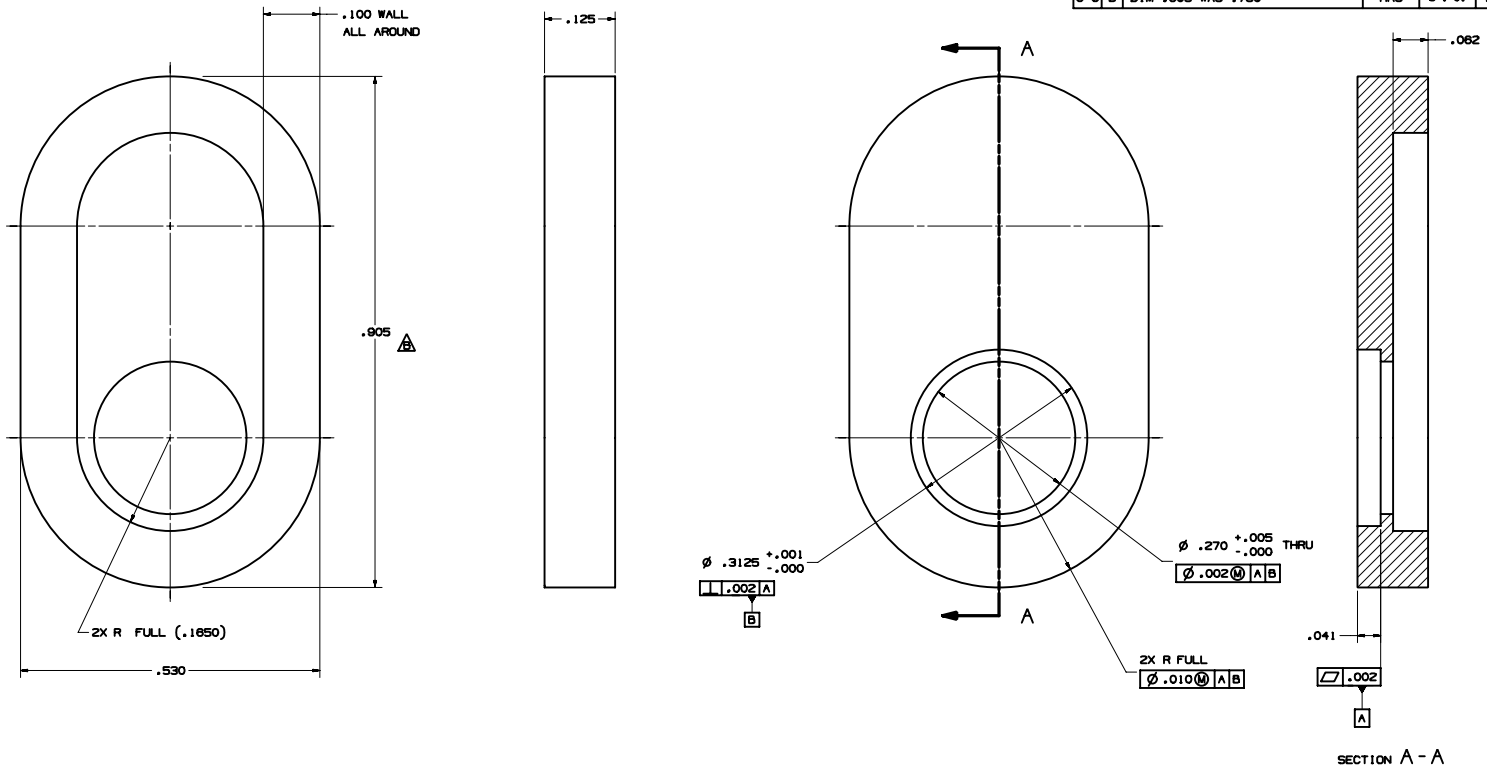

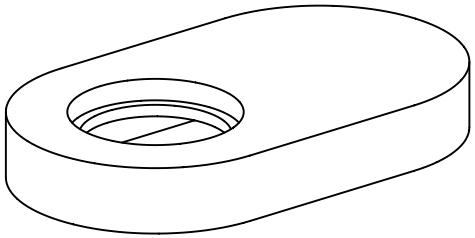

ISOMETRIC VIEW
FOR REFERENCE ONLY

101 ABBREVIATIONS PER ASME Y14.38-1999.
102 THOROUGHLY CLEAN PARTS TO REMOVE ALL OIL, GREASE, DIRT, CHIPS, ETC.
201 DIMENSIONING AND TOLERANCING PER ASME Y14.5M-1994.
203 SURFACE TEXTURE PER ASME B46.1-1995.
204 ALL INSIDE CORNERS TO BE R.010 MAX.
208 REMOVE BURRS AND SHARP EDGES TO .010 MAX.
401 BAG AND TAG PART WITH DRAWING NUMBER & REVISION LETTER.

QTY REQD	PART OR IDENTIFYING NO.	NOMENCLATURE OR DESCRIPTION	MATERIAL SPECIFICATION	ITEM NO
--	155Y520122	WELD INTERFACE BRACKET	OFE COPPER PER ASTM F68-82 CLASS 2 OR BETTER	--

PARTS LIST/BILL OF MATERIAL

DRAWING LEVEL: ----------

UNCLASSIFIED

TASK CONTRACTOR

CAD SYSTEM & VER.: ----------

SEE FINAL DESIGN AUTHORIZATION SHEET FOR SIGNATURES; SHEET IS FILED BY DRAWING NUMBER AT THE SNS PROJECT OFFICE.

UNLESS OTHERWISE SPECIFIED, DIMENSIONS ARE IN INCHES. TOLERANCES ARE:
DECIMALS .X= ±.1 .XX= ±.01 .XXX= ±.005
ANGULAR= ±.25°
MACHINED: 125 FINISH

APPROVALS		DATE	GROUP
DESIGNED	H. SALAZAR	10-13-00	SNS-3
DRAWN	H. SALAZAR	10-13-00	SNS-3
CHECKED	G. VALDEZ	3-29-01	ESA-DE
ENGINEERING	J. O'HARA	3-29-01	SNS-3
VACUUM	R. GILLIS	3-29-01	SNS-3
PHYSICS	S. KURENNOY	3-29-01	SNS-DO
APPROVED	M. PLUM	3-29-01	SNS-DO

NEXT ASSEMBLY USED ON: ---------- ----------
APPLICATION

SNS DWG No. 104050000-I8E-8200-A122-R00

Los Alamos National Laboratory
Los Alamos, New Mexico 87545
SNS DIVISION

PROJECT: SNS

BPM 12.5 mm RADIUS
WELD INTERFACE BRACKET

SIZE	CAGE CODE	DWG NO. & CAD FILENAME	REV
D	88516	155Y520122	B

SCALE 10/1 DO NOT SCALE SHEET 1 OF 1

REVISIONS						
ZONE	REV	DESCRIPTION	CHANGED BY	DATE	CLASS REVIEW	APPROVED
---	A	ORIGINAL ISSUE	-------	--------	NR	---
---	B	MATERIAL: WAS 303 SST	HRS	6-5-01	NR	

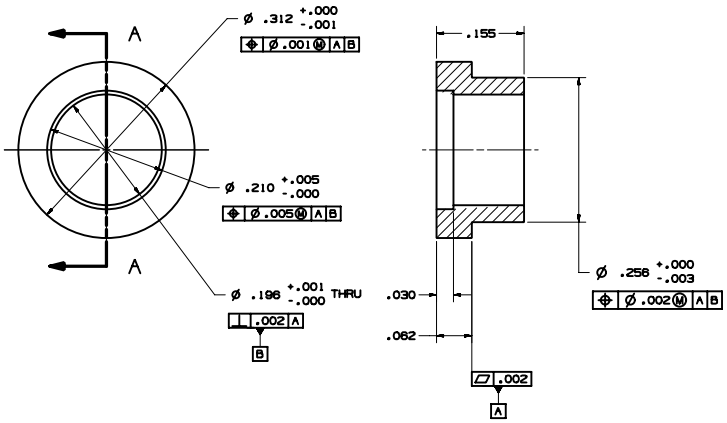

SECTION A - A

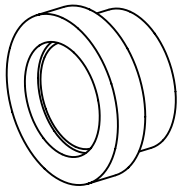

ISOMETRIC VIEW
FOR REFERENCE ONLY

101 ABBREVIATIONS PER ASME Y14.38-1999.
102 THOROUGHLY CLEAN PARTS TO REMOVE ALL OIL, GREASE, DIRT, CHIPS, ETC.
201 DIMENSIONING AND TOLERANCING PER ASME Y14.5M-1994.
203 SURFACE TEXTURE PER ASME B46.1-1995.
204 ALL INSIDE CORNERS TO BE R.010 MAX.
208 REMOVE BURRS AND SHARP EDGES TO .010 MAX.
401 BAG AND TAG PART WITH DRAWING NUMBER & REVISION LETTER.

SNS DWG No. 104050000-I8E-8200-A123-R00

QTY REQD	PART OR IDENTIFYING NO.	NOMENCLATURE OR DESCRIPTION	MATERIAL SPECIFICATION	ITEM NO
--	155Y520123	CONNECTOR INTERFACE BRACKET	304 STAINLESS STEEL	--

PARTS LIST/BILL OF MATERIAL

DRAWING LEVEL: ----------

UNCLASSIFIED

TASK CONTRACTOR

CAD SYSTEM & VER. ----------

SEE FINAL DESIGN AUTHORIZATION SHEET FOR SIGNATURES; SHEET IS FILED BY DRAWING NUMBER AT THE SNS PROJECT OFFICE.

UNLESS OTHERWISE SPECIFIED: DIMENSIONS ARE IN INCHES. TOLERANCES ARE:
DECIMALS .X= ±.1 .XX= ±.01 .XXX= ±.005
ANGULAR= ±.25°
MACHINED: 125 FINISH

APPROVALS		DATE	GROUP
DESIGNED	H. SALAZAR	10-13-00	SNS-3
DRAWN	H. SALAZAR	10-13-00	SNS-3
CHECKED	G. VALDEZ	3-29-01	ESA-DE
ENGINEERING	J. O'HARA	3-29-01	SNS-3
VACUUM	R. GILLIS	3-29-01	SNS-3
PHYSICS	S. KURENNOY	3-29-01	SNS-DO
APPROVED	M. PLUM	3-29-01	SNS-DO

NEXT ASSEMBLY USED ON ----------
APPLICATION ----------

Los Alamos National Laboratory
Los Alamos, New Mexico 87545
Los Alamos SNS DIVISION

PROJECT: SNS

BPM 12.5 mm RADIUS CONNECTOR INTERFACE BRACKET

SIZE	CAGE CODE	DWG NO. & CAD FILENAME	REV
D	88516	155Y520123	B

SCALE 10/1 DO NOT SCALE SHEET 1 OF 1

REVISIONS						
ZONE	REV	DESCRIPTION	CHANGED BY	DATE	CLASS REVIEW	APPROVED
---	A	ORIGINAL ISSUE	-------	--------	NR	---
---	--	----------	-------	--------	NR	---

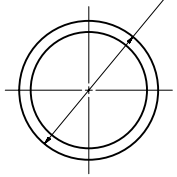

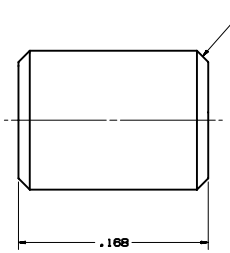

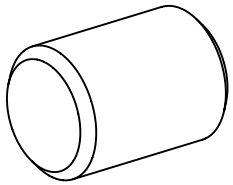

ISOMETRIC VIEW
FOR REFERENCE ONLY

101 ABBREVIATIONS PER ASME Y14.38-1999.
102 THOROUGHLY CLEAN PARTS TO REMOVE ALL OIL, GREASE, DIRT, CHIPS, ETC.
201 DIMENSIONING AND TOLERANCING PER ASME Y14.5M-1994.
203 SURFACE TEXTURE PER ASME B46.1-1995.
204 ALL INSIDE CORNERS TO BE R.010 MAX.
208 REMOVE BURRS AND SHARP EDGES TO .010 MAX.
401 BAG AND TAG PART WITH DRAWING NUMBER & REVISION LETTER.

SNS DWG No.
104050000-I8E-8200-A128-R00

QTY REQD	PART OR IDENTIFYING NO.	NOMENCLATURE OR DESCRIPTION	MATERIAL SPECIFICATION	ITEM NO
--	155Y520128	PIN	COPPER	--

PARTS LIST/BILL OF MATERIAL

DRAWING LEVEL

UNCLASSIFIED

TASK CONTRACTOR

CAD SYSTEM & VER.

SEE FINAL DESIGN AUTHORIZATION SHEET FOR SIGNATURES; SHEET IS FILED BY DRAWING NUMBER AT THE SNS PROJECT OFFICE.

UNLESS OTHERWISE SPECIFIED: DIMENSIONS ARE IN INCHES. TOLERANCES ARE:
DECIMALS .X= ±.1 .XX= ±.01 .XXX= ±.005
ANGULAR= ±.25°
MACHINED FINISH: 125

APPROVALS		DATE	GROUP
DESIGNED	H. SALAZAR	2-2-01	SNS-3
DRAWN	H. SALAZAR	2-2-01	SNS-3
CHECKED			
ENGINEERING	J. O'HARA		
VACUUM			
PHYSICS			
APPROVED			

NEXT ASSEMBLY USED ON
APPLICATION

Los Alamos National Laboratory
Los Alamos, New Mexico 87545
SNS DIVISION

PROJECT: SNS

SNS
BPM 12.5mm RADIUS
PIN DETAIL

SIZE	CAGE CODE	DWG NO. & CAD FILENAME	REV
D	88516	155Y520128	-A

SCALE 20/1 DO NOT SCALE SHEET 1 OF 1