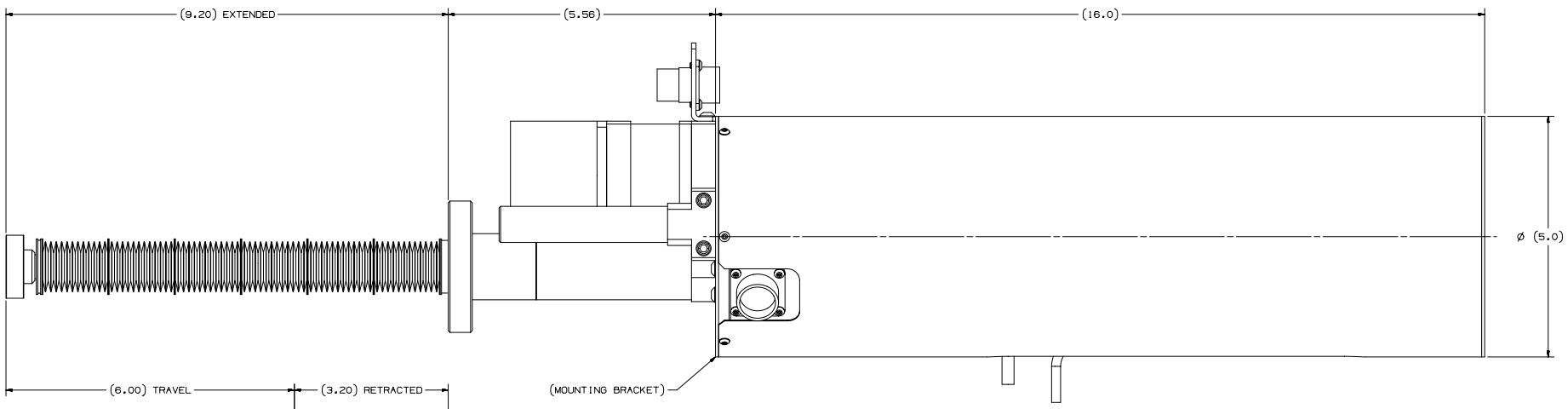

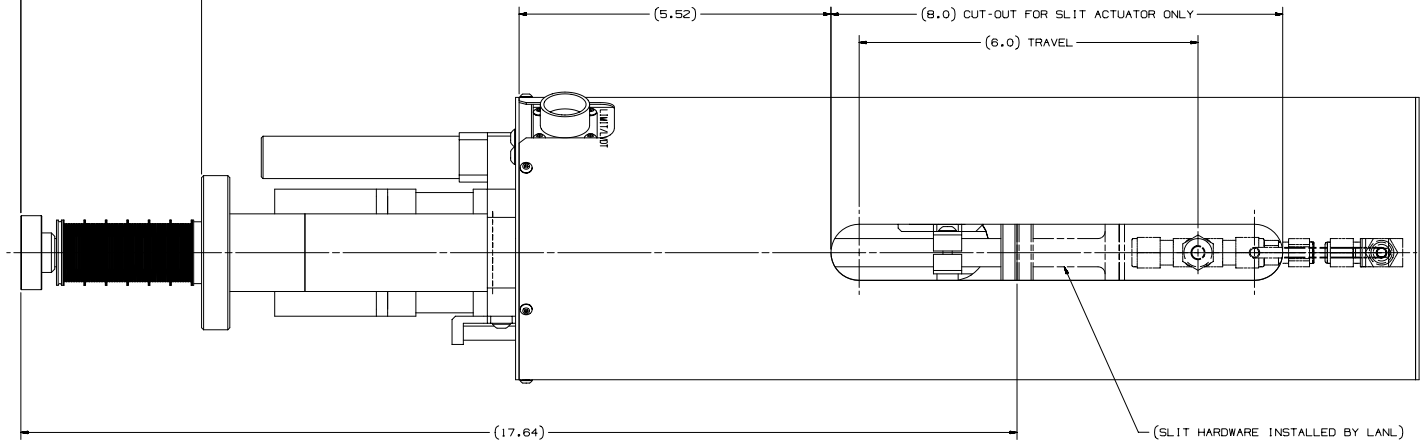

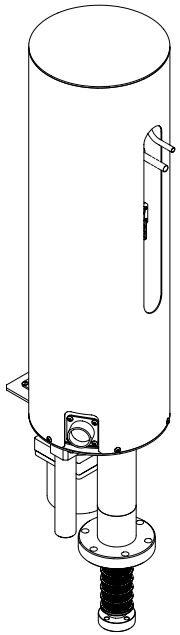

ISOMETRIC VIEW
SCALE: NONE

SUGGESTED SLIT ACTUATOR ASSEMBLY WITH DUST COVER

Los Alamos — Los Alamos National Laboratory, Los Alamos, New Mexico 87545 — SNS			
SKETCH No. (UNC)	SK-DS-SNS-02-001	SHEET No. 3	REV -
NAME SATTLER	DATE 02-25-02	SCALE 1/1	