REVISIONS						
ZONE	REV	DESCRIPTION	CHANGED BY	DATE	CLASS REVIEW	APPROVED
---	A	ORIGINAL ISSUE	-------	--------	NR	---
---	--	----------	-------	--------	NR	---

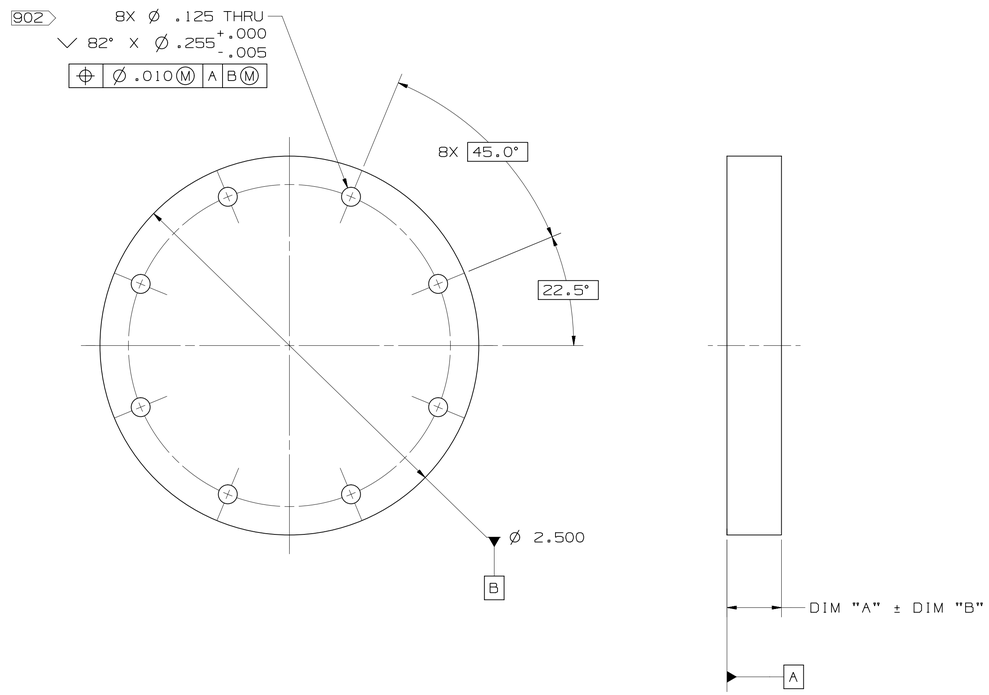

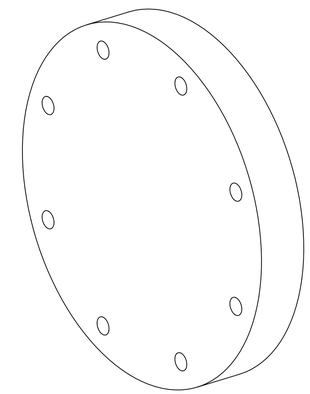

PART NUMBER	DIM "A"	DIM "B"	MATERIAL	
155Y521891-1	0.016	0.001	UCAR ATJ GRAPHITE	
155Y521891-3	0.120	0.001	UCAR ATJ GRAPHITE	
155Y521891-5	0.327	0.001	UCAR ATJ GRAPHITE	
155Y521891-7	0.165	0.003	GLIDCOP AL-60	901
155Y521891-9	0.258	0.003	GLIDCOP AL-60	901
155Y521891-11	0.360	0.003	GLIDCOP AL-60	901

NOTES: UNLESS OTHERWISE SPECIFIED

101 ABBREVIATIONS PER ASME Y14.38-1999.
102 THOROUGHLY CLEAN PARTS TO REMOVE ALL OIL, GREASE, DIRT, CHIPS, ETC.
201 DIMENSIONING AND TOLERANCING PER ASME Y14.5M-1994.
203 SURFACE TEXTURE PER ASME B46.1-1995.
204 ALL INSIDE CORNERS TO BE R.010 MAX.
206 C'SINK ALL TAPPED HOLES 100°, TO MAJOR DIA.
208 REMOVE BURRS AND SHARP EDGES TO .010 MAX.
401 BAG AND TAG PART WITH DRAWING NUMBER & REVISION LETTER.
901 COLD WORK LEVEL TO ROCKWELL B 86 MIN.
902 THRU HOLE IS TO BE INSTALLED ON ALL PARTS. COUNTER SINK IS TO BE INSTALLED ONLY ON PARTS 155Y521891-7, 155Y521891-9 AND 155Y521891-11.

PRELIMINARY
FOR INFORMATION OR REVIEW ONLY. DO NOT USE FOR PROCUREMENT OR FABRICATION. DRAWING CONTENT SUBJECT TO FUTURE CHANGE.
DATE 3-5-2002

SNS DWG No.
104050000-I8E-8200-B891-R00

QTY REQD	PART OR IDENTIFYING NO.	NOMENCLATURE OR DESCRIPTION	MATERIAL SPECIFICATION	ITEM NO
		ROUND BAR	SEE TABLE	

PARTS LIST/BILL OF MATERIAL

DRAWING LEVEL: PRODUCTION

UNCLASSIFIED

TASK CONTRACTOR

CAD SYSTEM & VER.: UG-V16.0.4

SEE FINAL DESIGN AUTHORIZATION SHEET FOR SIGNATURES. SHEET IS FILED BY DRAWING NUMBER AT THE SNS PROJECT OFFICE.

UNLESS OTHERWISE SPECIFIED: DIMENSIONS ARE IN INCHES.
TOLERANCES ARE:
DECIMALS .X= ±.1 .XX= ±.01 .XXX= ±.005
ANGULAR: ±.25°
MACHINED FINISH: 125

	APPROVALS	DATE	GROUP
DESIGNED	M. CATANACH	6-6-01	SNS-3
DRAWN	H. SALAZAR	8-8-01	SNS-3
CHECKED			
ENGINEERING	S. ELLIS	6-6-01	SNS-3
VACUUM			
PHYSICS			
APPROVED			

155Y521882 | 155Y521903
NEXT ASSEMBLY USED ON
APPLICATION

Los Alamos
Los Alamos National Laboratory
Los Alamos, New Mexico 87545
SNS DIVISION

PROJECT: SNS

DTL
FARADAY CUP/DEGRADER
ABSORBER DETAIL

SIZE	CAGE CODE	DWG NO. & CAD FILENAME	REV
D	88516	155Y521891	-A

SCALE 2/1 DO NOT SCALE SHEET 1 OF 1