| REVISIONS | | | | | | |
|---|---|---|---|---|---|---|
| ZONE | REV | DESCRIPTION | CHANGED BY | DATE | CLASS REVIEW | APPROVED |
| --- | A | ORIGINAL ISSUE | ------- | -------- | NR | --- |
| --- | -- | ---------- | ------- | -------- | NR | --- |

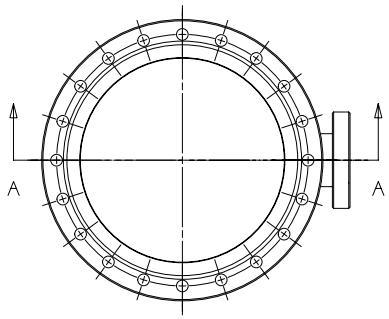


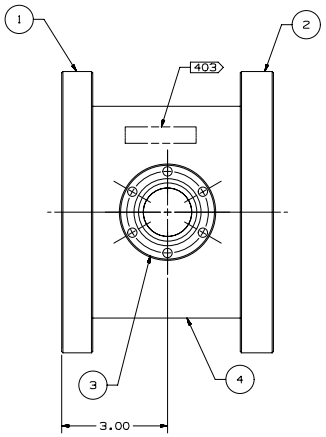


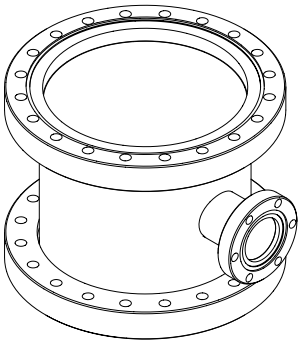

ISOMETRIC
SCALE: NONE

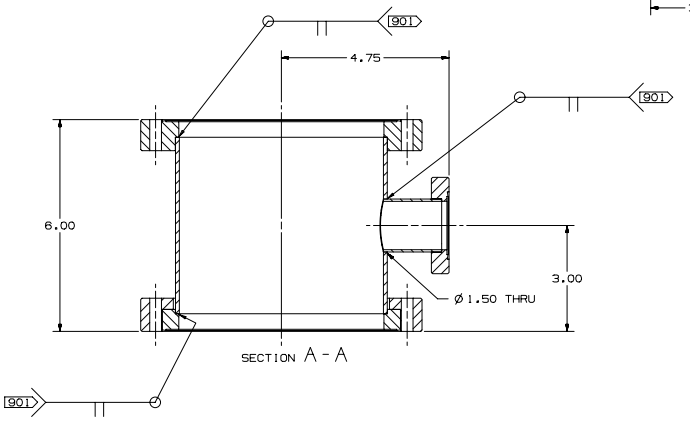


SECTION A - A

NOTES: UNLESS OTHERWISE SPECIFIED

101 ABBREVIATIONS PER ASME Y14.38-1999.
102 THOROUGHLY CLEAN PARTS TO REMOVE ALL OIL, GREASE, DIRT, CHIPS, ETC.
201 DIMENSIONING AND TOLERANCING PER ASME Y14.5M-1994.
301 WELDING & BRAZING SYMBOLS PER AWS A2.4-1998.
302 REMOVE BURRS AND SHARP EDGES.
321 WELD IN ACCORDANCE WITH AWS D1.6-1999.
403 ENGRAVE DRAWING NUMBER & REVISION LETTER, APPROXIMATELY WHERE SHOWN, IN .25" HIGH CHARACTERS.
901 FINAL ASSEMBLY SHALL BE LEAK TIGHT. LEAK RATE TO BE ESTABLISHED WITH A MASS SPECTROMETER TYPE LEAK DETECTOR. THE INSTRUMENT USED SHALL BE IDENTIFIED. CALIBRATION DATA SUPPLIED SHOULD INCLUDE "SENSITIVITY", AND "STANDARD LEAK SIZE." NO DETECTABLE LEAK USING A MSLD HAVING A SENSITIVITY OF 2 X $10^{-9}$ ATM cc/sec (HELIUM). CALIBRATION DATA INCLUDING SENS AND STD LEAK SIZE WILL BE INCLUDED.

**PRELIMINARY**
FOR INFORMATION OR REVIEW ONLY. DO NOT USE FOR PROCUREMENT OR FABRICATION. DRAWING CONTENT SUBJECT TO FUTURE CHANGE.

DATE

| QTY REQD | PART OR IDENTIFYING NO. | NOMENCLATURE OR DESCRIPTION | MATERIAL SPECIFICATION | ITEM NO |
|---|---|---|---|---|
| A/R | | TUBE, Ø 6.00 X .083 WALL | SST | 4 |
| 1 | MDC #401002 | HALF NIPPLE | SST | 3 |
| 1 | MDC #110031 | NONROTATABLE FLANGE, Ø 8.00 OD | SST | 2 |
| 1 | MDC #100031 | ROTATABLE FLANGE, Ø 8.00 OD | SST | 1 |
| | 155Y521819 | SPOOL ASSY-TURBO PUMP | | |

PARTS LIST/BILL OF MATERIAL

DRAWING LEVEL: PRODUCTION

UNCLASSIFIED

TASK CONTRACTOR

CAD SYSTEM & VER.: UG V16.0.4

SEE FINAL DESIGN AUTHORIZATION SHEET FOR SIGNATURES; SHEET IS FILED BY DRAWING NUMBER AT THE SNS PROJECT OFFICE.

UNLESS OTHERWISE SPECIFIED: DIMENSIONS ARE IN INCHES. TOLERANCES ARE:
DECIMALS .X= ±.1 .XX= ±.01 .XXX= ±.005
ANGULAR= ±.25°
MACHINED: 125 FINISH

| APPROVALS | | DATE | GROUP |
|---|---|---|---|
| DESIGNED | D. IRELAND | 8/17/01 | SNS-3 |
| DRAWN | A. ROMERO | 8/17/01 | SNS-3 |
| CHECKED | ---------- | -------- | ------ |
| ENGINEERING | ---------- | -------- | ------ |
| VACUUM | ---------- | -------- | ------ |
| PHYSICS | ---------- | -------- | ------ |
| APPROVED | ---------- | -------- | ------ |

NEXT ASSEMBLY USED ON
APPLICATION

SNS DWG No. 104050000-I8D-8200-B819-R00

Los Alamos National Laboratory
Los Alamos, New Mexico 87545
SNS DIVISION

PROJECT: SNS

DIAGNOSTICS PLATE
VACUUM SYSTEM
SPOOL ASSY-TURBO PUMP

| SIZE | CAGE CODE | DWG NO. & CAD FILENAME | REV |
|---|---|---|---|
| D | 88516 | 155Y521819 | -A |

SCALE 5/8 DO NOT SCALE SHEET 1 OF 1