REVISIONS						
ZONE	REV	DESCRIPTION	CHANGED BY	DATE	CLASS REVIEW	APPROVED
---	A	ORIGINAL ISSUE	--------	--------	NR	---
---	--	----------	--------	--------	NR	---

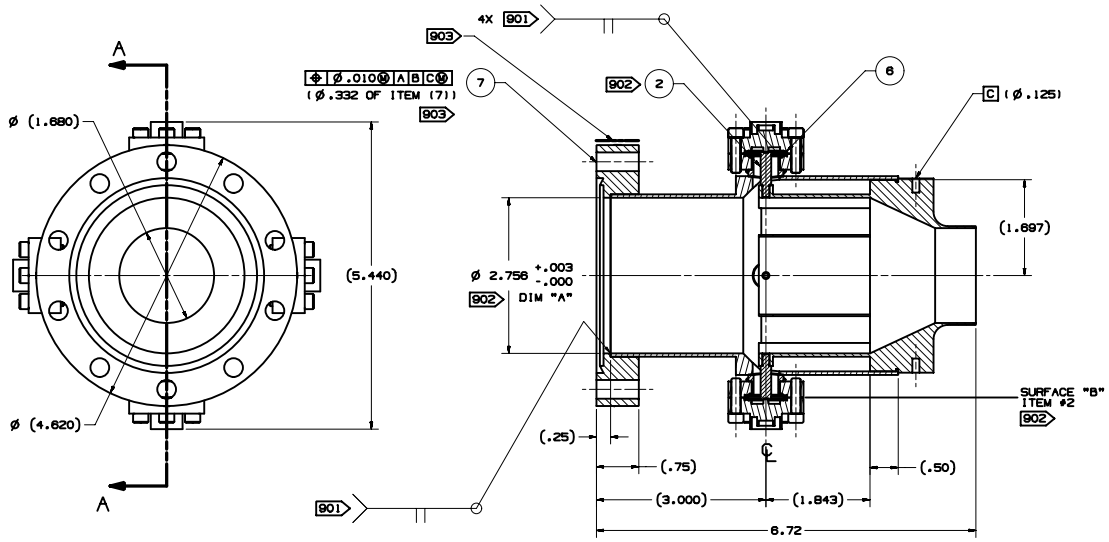

SECTION A - A

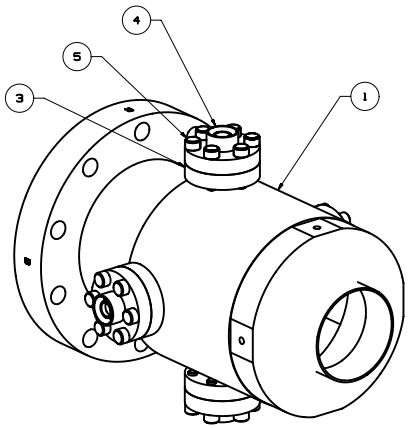

NOTES: UNLESS OTHERWISE SPECIFIED:

101 ABBREVIATIONS PER ASME Y14.38-1999.

102 THOROUGHLY CLEAN PARTS TO REMOVE ALL OIL, GREASE, DIRT, CHIPS, ETC.

201 DIMENSIONING AND TOLERANCING PER ASME Y14.5M-1994.

210 SULFUR BASED CUTTING OILS SHALL NO BE USED.

214 CONTACT OF ANY MATERIAL CONTAINING FREE SILICON WITH THIS PART DURING FABRICATION, INSPECTION OR STORAGE IS PROHIBITED.

401 BAG AND TAG PART WITH DRAWING NUMBER & REVISION LETTER.

901 FINAL ASSEMBLY SHALL BE LEAK TIGHT. LEAK RATE TO BE ESTABLISHED WITH A MASS SPECTROMETER TYPE LEAK DETECTOR THE INSTRUMENT USED SHALL BE IDENTIFIED. CALIBRATION DATA SUPPLIED SHOULD INCLUDE "SENSITIVITY" AND "STANDARD LEAK SIZE" MAXIMUM DETECTABLE LEAKAGE SHALL BE NO GREATER THAN 1.0 X 10^{-9} STD. CC/SEC. (HELIUM)

902 FINISH MACHINE SURFACE "B" OF ITEM #2 AS REQUIRED TO OBTAIN DIMENSION "A" WITH ITEM #4 INSTALLED 4 PLACES. DIMENSION "A" OF PART NUMBER 155Y520181-A SHALL BE CONCENTRIC WITH PART NUMBER 155Y520180-A AND CONTACT MUST BE MAINTAINED BETWEEN ITEM #2 AND ITEM #4 INDEPENDENTLY AT ASSEMBLY. DIMENSIONAL RELATIONSHIP TO BE MEASURED AT THE CENTERLINE OF ITEM #4.

903 LETTER "R" MARKING TO BE IN LINE WITH DATUM C AND .332 DIAMETER OF ITEM (7), AS SHOWN.

QTY REQD	PART OR IDENTIFYING NO.	NOMENCLATURE OR DESCRIPTION	MATERIAL SPECIFICATION	ITEM NO
1	155Y520177	DETAIL, DEL-SEAL FLANGE MOD	STAINLESS STEEL	7
4		DEL SEAL COPPER GASKET	OFHC	6
24		SCR, SCKT HD #8-32 UNC-2A X .63 LG	STAINLESS STEEL	5
4	853890-001	KAMAN SMA-F UHV CONN ASSY FEEDTHRU		4
4	130003	DEL-SEAL FLANGE BORED TAPPED	STAINLESS STEEL	3
4	155Y520134	DETAIL, BPM PROBE		2
1	155Y520179	SUBASSY, BRAZE		1
	155Y520178	ASSEMBLY, BPM TRANSION REGION		

PARTS LIST/BILL OF MATERIAL

DRAWING LEVEL: PRODUCTION

UNCLASSIFIED

TASK CONTRACTOR

CAD SYSTEM & VER.: UNIGRAPHICS V-16

SEE FINAL DESIGN AUTHORIZATION SHEET FOR SIGNATURES; SHEET IS FILED BY DRAWING NUMBER AT THE SNS PROJECT OFFICE.

UNLESS OTHERWISE SPECIFIED: DIMENSIONS ARE IN INCHES. TOLERANCES ARE:

DECIMALS .X= ±.1 .XX= ±.01 .XXX= ±.005

ANGULAR= ±.25° MACHINED: 125 FINISH

APPROVALS		DATE	GROUP
DESIGNED	H. SALAZAR	7-19-01	SNS-3
DRAWN	H. SALAZAR	7-19-01	SNS-3
CHECKED	C. COMBS	8-20-01	ESA-DE
ENGINEERING	J. O'HARA	9-4-01	SNS-3
VACUUM			
PHYSICS	S. KURENNOY	9-4-01	SNS-DO
APPROVED	M. PLUM	9-4-01	SNS-DO

NEXT ASSEMBLY USED ON

APPLICATION

SNS DWG No. 104050000-I8E-8200-A178-R00

Los Alamos National Laboratory, Los Alamos, New Mexico 87545

SNS DIVISION

PROJECT: SNS

BPM TRANSION REGION ASSEMBLY

SIZE	CAGE CODE	DWG NO. & CAD FILENAME	REV
D	88516	155Y520178	-A

SCALE 1/1 DO NOT SCALE SHEET 1 OF 1

REVISIONS						
ZONE	REV	DESCRIPTION	CHANGED BY	DATE	CLASS REVIEW	APPROVED
---	A	ORIGINAL ISSUE	--------	--------	NR	---
---	--	----------	--------	--------	NR	---

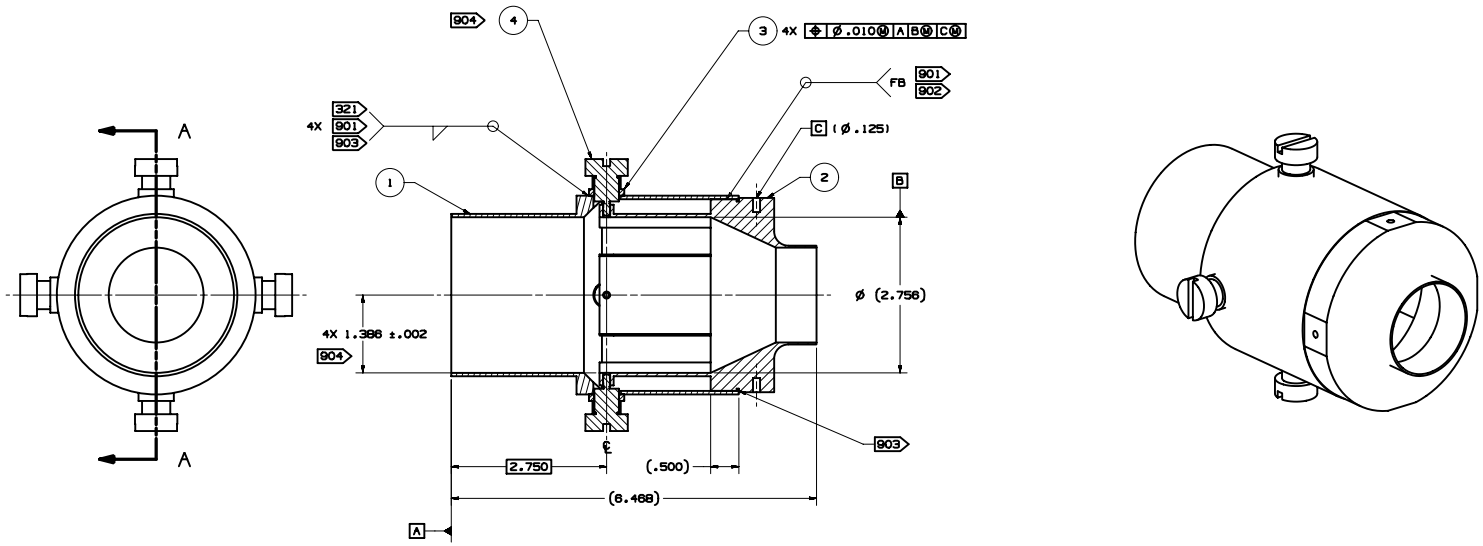

SECTION A - A

NOTES: UNLESS OTHERWISE SPECIFIED:

101 ABBREVIATIONS PER ASME Y14.38-1999.
102 THOROUGHLY CLEAN PARTS TO REMOVE ALL OIL, GREASE, DIRT, CHIPS, ETC.
201 DIMENSIONING AND TOLERANCING PER ASME Y14.5M-1994.
208 REMOVE BURRS AND SHARP EDGES TO .010 MAX.
210 SULFUR BASED CUTTING OILS SHALL NO BE USED.
214 CONTACT OF ANY MATERIAL CONTAINING FREE SILICON WITH THIS PART DURING FABRICATION, INSPECTION OR STORAGE IS PROHIBITED.
301 WELDING & BRAZING SYMBOLS PER AWS A2.4-1998.
321 WELD IN ACCORDANCE WITH AWS D1.6-1999. PRIOR TO BRAZE OPERATION.
322 REMOVE ITEM (4), 4 PLACES AFTER WELD AND FURNACE BRAZE.
401 BAG AND TAG PART WITH DRAWING NUMBER & REVISION LETTER.
901 FINAL ASSEMBLY SHALL BE LEAK TIGHT. LEAK RATE TO BE ESTABLISHED WITH A MASS SPECTROMETER TYPE LEAK DETECTOR THE INSTRUMENT USED SHALL BE IDENTIFIED. CALIBRATION DATA SUPPLIED SHOULD INCLUDE "SENSITIVITY" AND "STANDARD LEAK SIZE" MAXIMUM DETECTABLE LEAKAGE SHALL BE NO GREATER THAN 1.0 X 10^{-9} STD. CC/SEC. (HELIUM)
902 BRAZE IN A HYDROGEN FURNACE USING BRAZE ALLOY SIMULAR OR EQUAL TO WESGO COPPER (99.99% Cu) LIQUIDUS 1083°C.
903 MAINTAIN LINE TO LINE CONTACT BETWEEN ITEM (1) AND ITEM (2) DURING WELDING OF ITEM (3).
904 PRELOAD EACH SPRING MEMBER OF ITEM (2) TO DIMENSION SHOWN BY ADJUSTING ITEM (4) AS REQUIRED. FOUR PLACES INDEPENDENTLY PRIOR TO BRAZE OPERATION. DIMENSIONAL RELATIONSHIP MEASURED AT CENTERLINE OF ITEM (4).

QTY REQD	PART OR IDENTIFYING NO.	NOMENCLATURE OR DESCRIPTION	MATERIAL SPECIFICATION	ITEM NO
4	155Y520107	DETAIL, ALIGNMENT PLUG	----------	4
4	155Y520135	DETAIL, FLANGE WELD SPACER	----------	3
1	155Y520181	DETAIL, ELECTRODE	----------	2
1	155Y520180	DETAIL, COVER	----------	1
	155Y520179	SUBASSEMBLY, BRAZE		

PARTS LIST/BILL OF MATERIAL

DRAWING LEVEL: PRODUCTION

UNCLASSIFIED

TASK CONTRACTOR

CAD SYSTEM & VER.: UNIGRAPHICS V-16

SEE FINAL DESIGN AUTHORIZATION SHEET FOR SIGNATURES; SHEET IS FILED BY DRAWING NUMBER AT THE SNS PROJECT OFFICE.

UNLESS OTHERWISE SPECIFIED: DIMENSIONS ARE IN INCHES. TOLERANCES ARE:
DECIMALS .X= ±.1 .XX= ±.01 .XXX= ±.005
ANGULAR= ±.25°
MACHINED: 125 FINISH

APPROVALS		DATE	GROUP
DESIGNED	H. SALAZAR	7-19-01	SNS-3
DRAWN	H. SALAZAR	7-19-01	SNS-3
CHECKED	C. COMBS	8-20-01	ESA-DE
ENGINEERING	J. O'HARA	9-4-01	SNS-3
VACUUM			
PHYSICS	S. KURENNOY	9-4-01	SNS-DO
APPROVED	M. PLUM	9-4-01	SNS-DO

155Y520178 ---------- NEXT ASSEMBLY USED ON APPLICATION

SNS DWG No. 104050000-I8E-8200-A179-R00

Los Alamos National Laboratory, Los Alamos, New Mexico 87545
Los Alamos SNS DIVISION

PROJECT: SNS

BPM TRANSION REGION BRAZE SUBASSEMBLY

SIZE	CAGE CODE	DWG NO. & CAD FILENAME	REV
D	88516	155Y520179	-A

SCALE 1/1 DO NOT SCALE SHEET 1 OF 1

REVISIONS						
ZONE	REV	DESCRIPTION	CHANGED BY	DATE	CLASS REVIEW	APPROVED
---	A	ORIGINAL ISSUE	--------	--------	NR	---
---	--	----------	--------	--------	NR	---

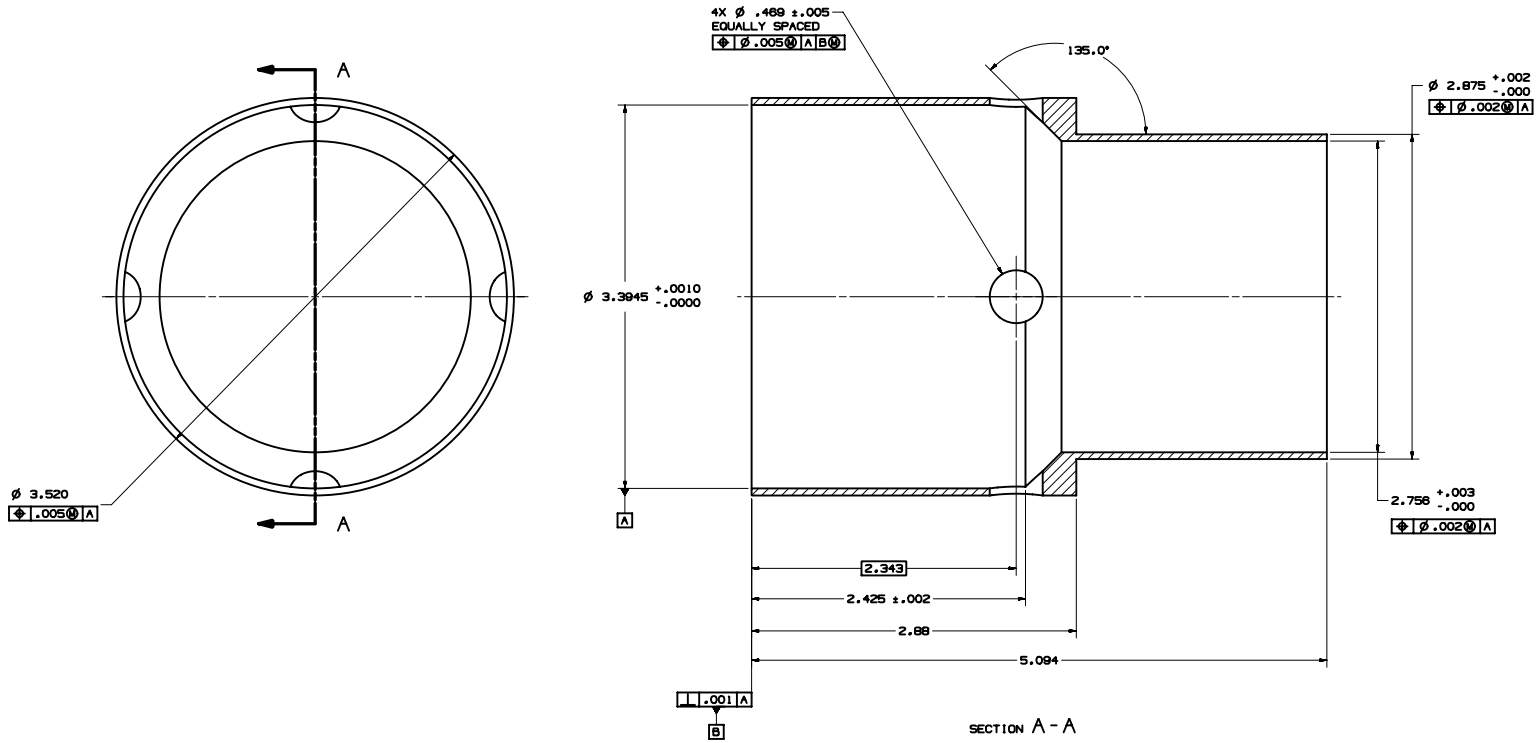

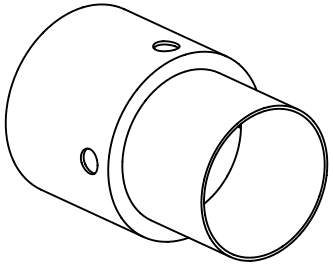

NOTES: UNLESS OTHERWISE SPECIFIED:
101 ABBREVIATIONS PER ASME Y14.38-1999.
102 THOROUGHLY CLEAN PARTS TO REMOVE ALL OIL, GREASE, DIRT, CHIPS, ETC.
201 DIMENSIONING AND TOLERANCING PER ASME Y14.5M-1994.
203 SURFACE TEXTURE PER ASME B46.1-1995.
204 ALL INSIDE CORNERS TO BE R.010 MAX.
206 C'SINK ALL TAPPED HOLES 100°, TO MAJOR DIA.
208 REMOVE BURRS AND SHARP EDGES TO .010 MAX.
210 SULFUR BASED CUTTING OILS SHALL NOT BE USED.
214 CONTACT OF ANY MATERIAL CONTAINING FREE SILICON WITH THIS PART DURING FABRICATION, INSPECTION, OR STORAGE IS PROHIBITED.
401 BAG AND TAG PART WITH DRAWING NUMBER & REVISION LETTER.

QTY REQD	PART OR IDENTIFYING NO.	NOMENCLATURE OR DESCRIPTION	MATERIAL SPECIFICATION	ITEM NO
--	155Y520180	DETAIL, COVER	304L STAINLESS STEEL	--

PARTS LIST/BILL OF MATERIAL

DRAWING LEVEL: PRODUCTION

UNCLASSIFIED

TASK CONTRACTOR

CAD SYSTEM & VER.: UNIGRAPHICS V-16

SEE FINAL DESIGN AUTHORIZATION SHEET FOR SIGNATURES; SHEET IS FILED BY DRAWING NUMBER AT THE SNS PROJECT OFFICE.

UNLESS OTHERWISE SPECIFIED: DIMENSIONS ARE IN INCHES. TOLERANCES ARE:
DECIMALS .X= ±.1 .XX= ±.01 .XXX= ±.005
ANGULAR= ±.25°
MACHINED: 125 FINISH

APPROVALS		DATE	GROUP
DESIGNED	H. SALAZAR	6-21-01	SNS-3
DRAWN	H. SALAZAR	6-21-01	SNS-3
CHECKED	C. COMBS	8-20-01	ESA-DE
ENGINEERING	J. O'HARA	9-4-01	SNS-3
VACUUM			
PHYSICS	S. KURENNOY	9-4-01	SNS-DO
APPROVED	M. PLUM	9-4-01	SNS-DO

155Y520179 ---------- NEXT ASSEMBLY USED ON
APPLICATION

SNS DWG No. 104050000-I8E-8200-A180-R00

Los Alamos National Laboratory
Los Alamos, New Mexico 87545
SNS DIVISION

PROJECT: SNS

BPM TRANS REGION COVER DETAIL

SIZE	CAGE CODE	DWG NO. & CAD FILENAME	REV
D	88516	155Y520180	-A

SCALE 2/1 DO NOT SCALE SHEET 1 OF 1

REVISIONS						
ZONE	REV	DESCRIPTION	CHANGED BY	DATE	CLASS REVIEW	APPROVED
---	A	ORIGINAL ISSUE	--------	--------	NR	---
---	--	----------	--------	--------	NR	---

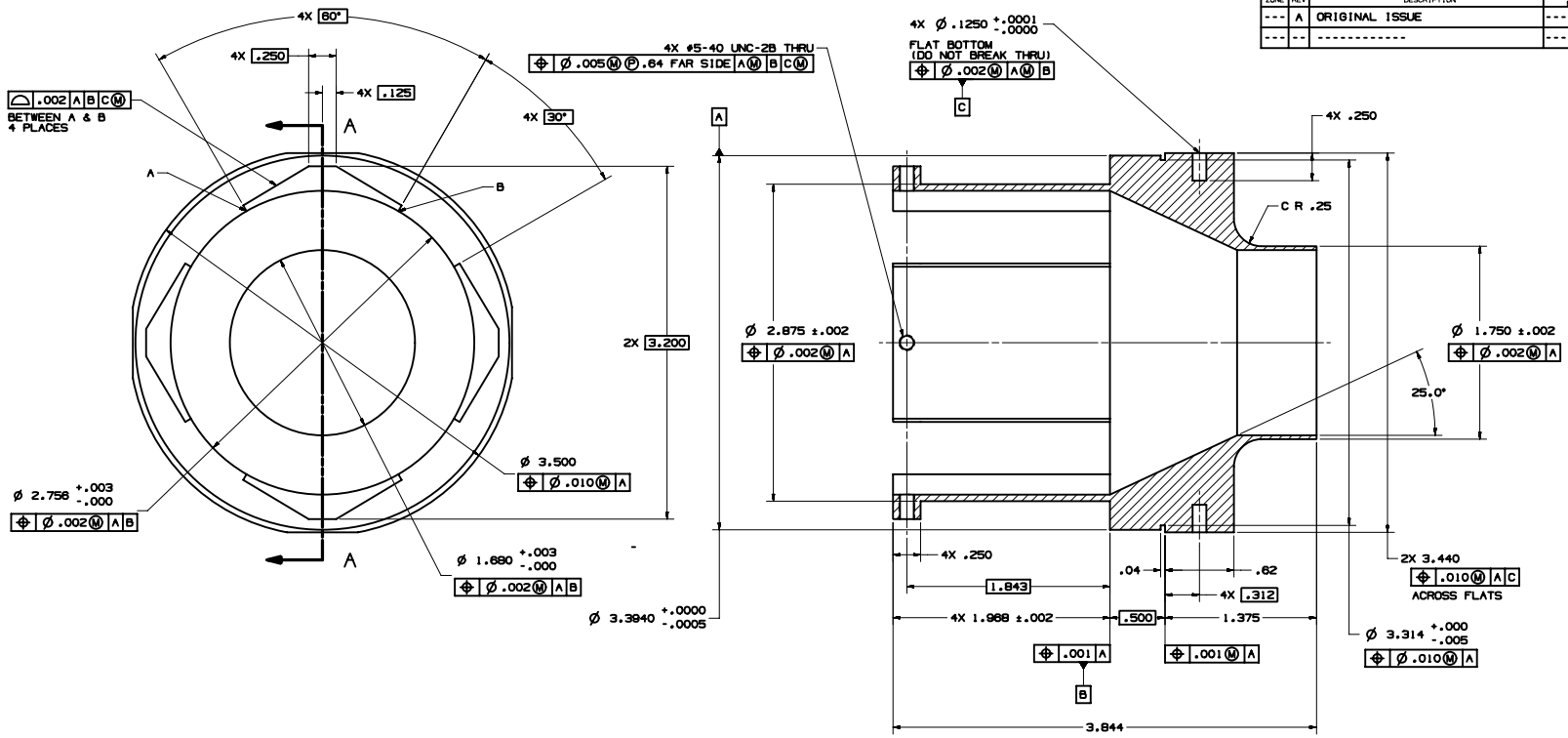

SECTION A-A

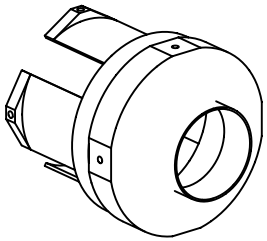

NOTES: UNLESS OTHERWISE SPECIFIED:
101 ABBREVIATIONS PER ASME Y14.38-1999.
102 THOROUGHLY CLEAN PARTS TO REMOVE ALL OIL, GREASE, DIRT, CHIPS, ETC.
201 DIMENSIONING AND TOLERANCING PER ASME Y14.5M-1994.
203 SURFACE TEXTURE PER ASME B46.1-1995.
204 ALL INSIDE CORNERS TO BE R.010 MAX.
206 C'SINK ALL TAPPED HOLES 100°, TO MAJOR DIA.
208 REMOVE BURRS AND SHARP EDGES TO .010 MAX.
210 SULFUR BASED CUTTING OILS SHALL NOT BE USED.
214 CONTACT OF ANY MATERIAL CONTAINING FREE SILICON WITH THIS PART DURING FABRICATION, INSPECTION, OR STORAGE IS PROHIBITED.
401 BAG AND TAG PART WITH DRAWING NUMBER & REVISION LETTER.

QTY REQD	PART OR IDENTIFYING NO.	NOMENCLATURE OR DESCRIPTION	MATERIAL SPECIFICATION	ITEM NO
--	155Y520181	DETAIL, ELECTRODE	304L STAINLESS STEEL	--

PARTS LIST/BILL OF MATERIAL

DRAWING LEVEL: PRODUCTION

UNCLASSIFIED

TASK CONTRACTOR

CAD SYSTEM & VER.: UNIGRAPHICS V-16

SEE FINAL DESIGN AUTHORIZATION SHEET FOR SIGNATURES; SHEET IS FILED BY DRAWING NUMBER AT THE SNS PROJECT OFFICE.

UNLESS OTHERWISE SPECIFIED: DIMENSIONS ARE IN INCHES. TOLERANCES ARE:
DECIMALS .X= ±.1 .XX= ±.01 .XXX= ±.005
ANGULAR= ±.25°
MACHINED: 125 FINISH

APPROVALS		DATE	GROUP
DESIGNED	H. SALAZAR	7-19-01	SNS-3
DRAWN	H. SALAZAR	7-19-01	SNS-3
CHECKED	C. COMBS	8-20-01	ESA-DE
ENGINEERING	J. O'HARA	9-4-01	SNS-3
VACUUM			
PHYSICS	S. KURENNOY	9-4-01	SNS-DO
APPROVED	M. PLUM	9-4-01	SNS-DO

155Y520179 ---------- NEXT ASSEMBLY USED ON
APPLICATION

SNS DWG No. 104050000-I8E-8200-A181-R00

Los Alamos National Laboratory
Los Alamos, New Mexico 87545
SNS DIVISION

PROJECT: SNS

BPM TRANS REGION
ELECTRODE
DETAIL

SIZE	CAGE CODE	DWG NO. & CAD FILENAME	REV
D	88516	155Y520181	-A

SCALE 2/1 DO NOT SCALE SHEET 1 OF 1