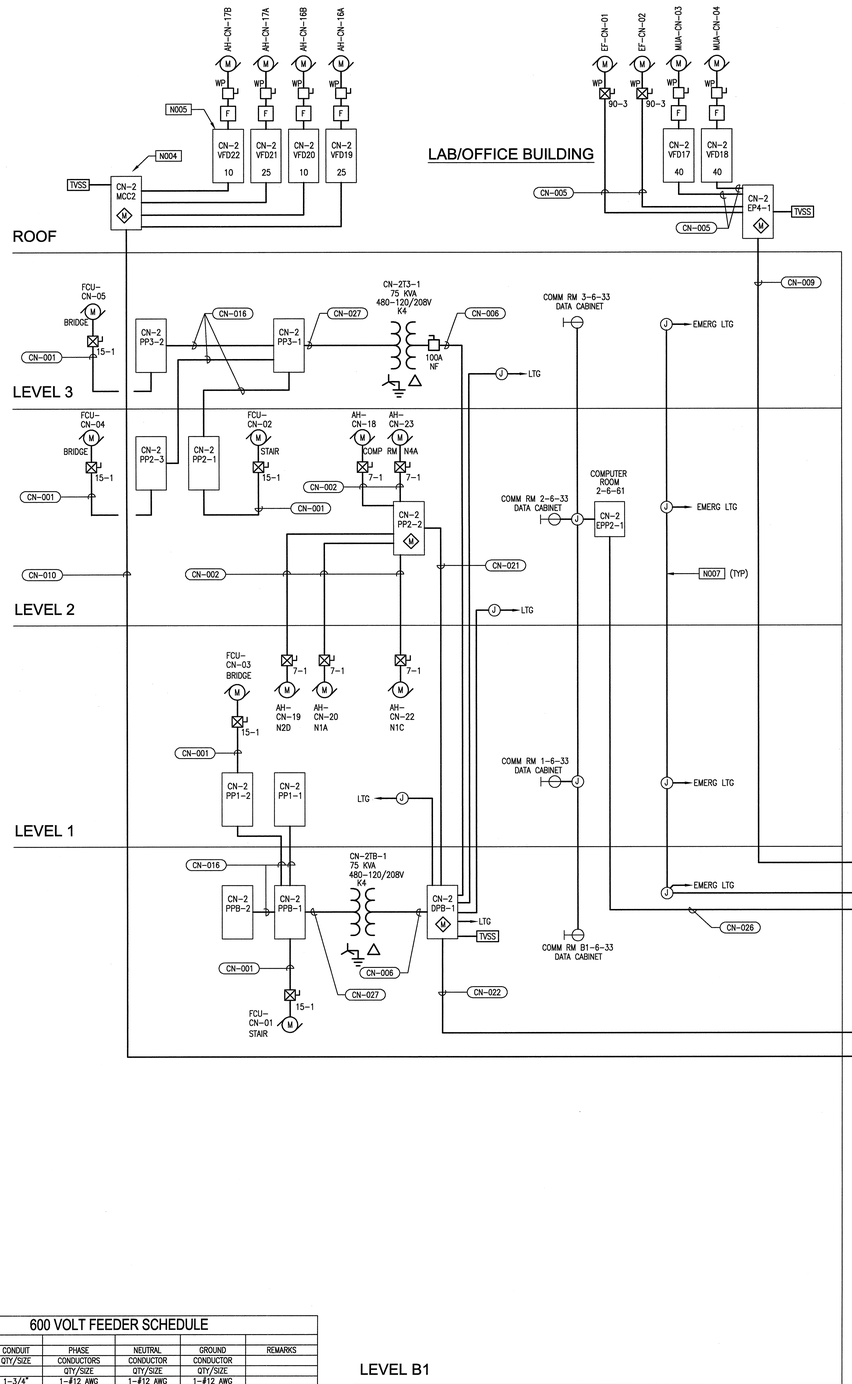

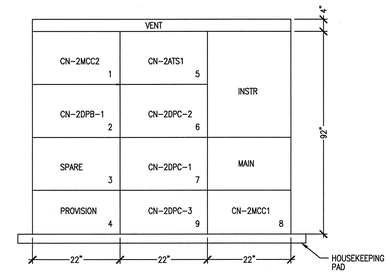

CN-SS2 SUBSTATION ELEVATION

KEYNOTES:

N001	PROVIDE TO EACH VFD A 3/4" CONDUIT AND 2 #14 AWG NOT SHOWN. MAKE CONNECTIONS TO DOOR INTERLOCK SW IN DISC SW AT MOTOR, TO DISABLE VFD WHEN DISC SW IS OPEN. LEAVE A PULL WIRE IN CONDUIT FOR USE BY OTHERS.
N002	2°C, 8#12 AWG FOR CONTROLS AND 120VAC TO BATT CHARGER AND BLOCK HEATER.
N003	PROVIDE LINE FILTERS ON VFD'S WITH ONE-WAY CIRCUIT LENGTH OF 100 FT OR MORE.
N004	MOTOR LOADS AND FEEDER SIZES FROM MCC ARE SHOWN ON MCC SCHEDULE, SHT E9.13.40.
N005	FOR AH-CN-16 AND 17, MAKE PROVISIONS FOR DETECTION OF SMOKE TO SHUT DOWN VFD VIA MECH DDC.
N006	THE FEEDER AND CONDUIT SIZE SHALL BE AS SHOWN. SIZES BETWEEN EACH PIECE OF EQUIPMENT FROM SOURCE TO LOAD SHALL MATCH THE SIZE SHOWN.
N007	SMALL BRANCH CIRCUIT SIZES FROM PANELS ARE SHOWN ON PLAN DRAWINGS.
N008	ALL 120/208V PANELS DOWNSTREAM OF A K-RATED TRANSFORMER REQUIRE DOUBLE NEUTRALS.
N009	PROVIDE DATA HIGHWAY (BLUE HOSE) CABLE FROM 480V SWITCHGEAR TO IT ROOM B1-6-52, FOR DATA MONITORING. LEAVE 15' COIL IN IT ROOM. SEE E8.21.41 AND SPECS.
N010	PROVIDE 120V EMERG POWER TO FA PANEL. COORDINATE WITH FA INSTALLER.
N011	ENERGY MONITORING EQPT WILL BE PROCURED UNDER SNS SUBSTATION CONTRACT. SEE CM FOR DETAILS. CONNECTIONS FROM MONITORING EQPT TO MECH DDC'S WILL BE BY MECH CONTROLS CONTRACTOR.
N012	SEE NOTE N004, SHT. E1.00.41.

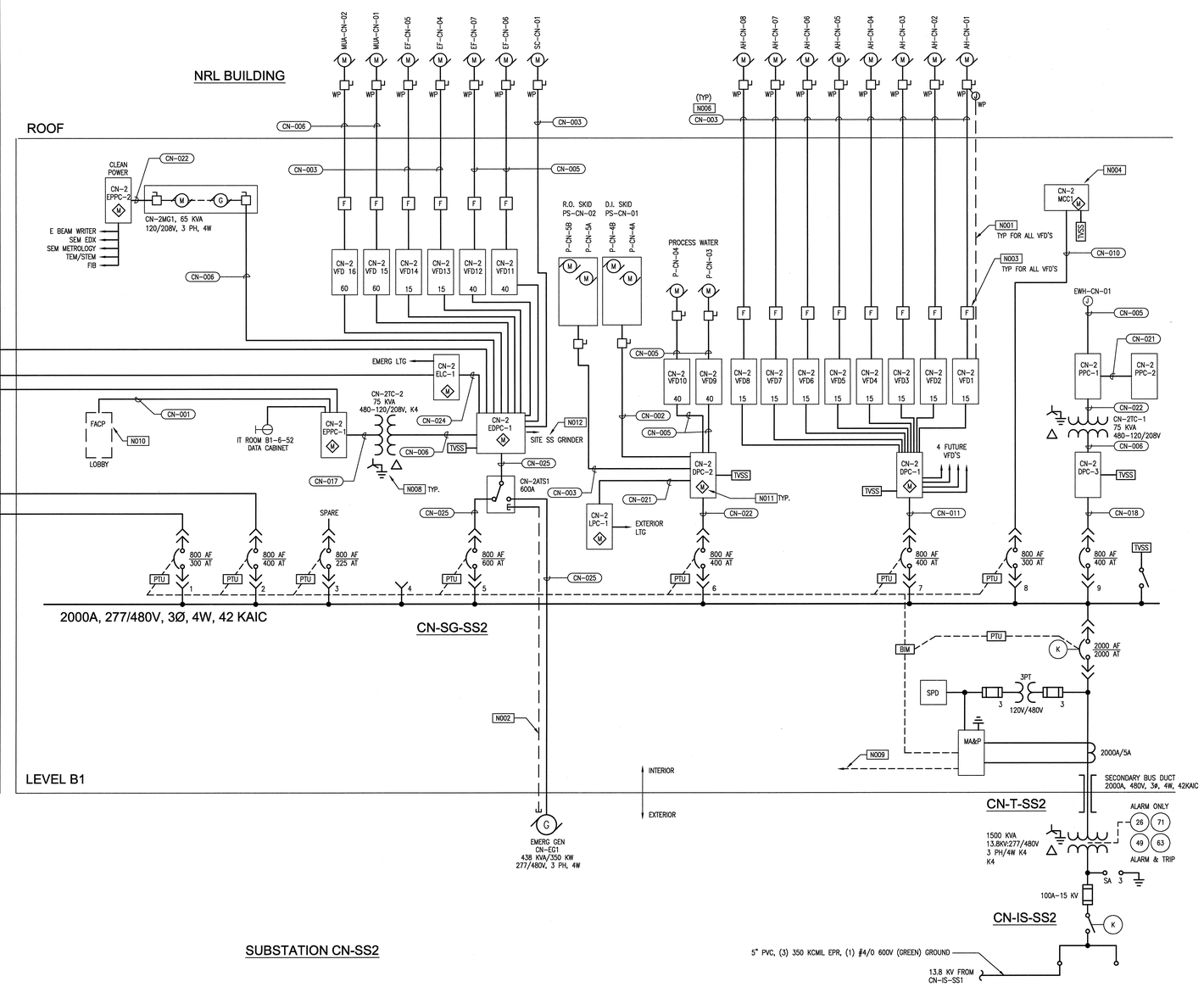

SUBSTATION CN-SS2

600 VOLT FEEDER SCHEDULE

TAG NO.	CONDUIT QTY/SIZE	PHASE CONDUCTORS QTY/SIZE	NEUTRAL CONDUCTOR QTY/SIZE	GROUND CONDUCTOR QTY/SIZE	REMARKS
CN-001	1-3/4"	1-#12 AWG	1-#12 AWG	1-#12 AWG	
CN-002	1-3/4"	3-#12 AWG	–	1-#12 AWG	
CN-003	1-3/4"	3-#10 AWG	–	1-#10 AWG	
CN-004	1-3/4"	3-#8 AWG	–	1-#10 AWG	
CN-005	1-1"	3-#6 AWG	–	1#-8 AWG	
CN-006	1-1 1/2"	3-#2 AWG	–	1-#6 AWG	
CN-007	1-1 1/2"	3-#1 AWG	–	1-#6 AWG	
CN-008	1-2"	3-#1/0 AWG	–	1-#6 AWG	
CN-009	1-2 1/2"	3-#4/0 AWG	–	1-#4 AWG	
CN-010	1-3"	3-350kcmil	–	1-#2 AWG	
CN-011	2-2 1/2"	6-#4/0 AWG	–	2-#4 AWG	
CN-012	2-3"	6-350 kcmil	–	2-#2 AWG	
CN-013	2-3"	6-400 kcmil	–	2-#2 AWG	
CN-014	3-3"	9-350 kcmil	–	3-#2 AWG	
CN-015	3-3 1/2"	9-500 kcmil	–	3-#2 AWG	
CN-016	1-1 1/2"	3-#2 AWG	2-#2 AWG	1-#6 AWG	
CN-017	1-3"	3-#4/0 AWG	2-#4/0 AWG	1-#4 AWG	
CN-018	2-3"	6-#4/0 AWG	4-#4/0 AWG	2-#4 AWG	
CN-019	3-3 1/2"	9-350 kcmil	6-350 kcmil	3-#2 AWGI	
CN-020	3-4"	9-500kcmil	6-500 kcmil	3-#2 AWG	
CN-021	1-1 1/2"	3-#2 AWG	1-#2 AWG	1-#6 AWG	
CN-022	1-2 1/2"	3-#4/0 AWG	1-#4/0 AWG	1-#4 AWG	
CN-023	1-2"	3-#1/0 AWG	1-#1/0 AWG	1-#6 AWG	
CN-024	1-1"	3-#6 AWG	1-#6 AWG	1-1#8 AWG	
CN-025	2-3"	6-#350 kcmil	2-#350 kcmil	2-#2 AWG	
CN-026	1-2"	3-#1/0 AWG	2-#1/0 AWG	1-#6 AWG	
CN-027	1-3"	3-#250kcmil	2-#250 kcmil	1-#4 AWG	

NO REPRESENTATION OR WARRANTY, EXPRESSED OR IMPLIED, IS MADE AS TO THE ACCURACY, COMPLETENESS OR USEFULNESS OF THE INFORMATION OR STATEMENTS CONTAINED IN THESE DRAWINGS, OR THAT THE USE OR DISCLOSURE OF ANY INFORMATION, APPARATUS, METHOD, OR PROCESS DISCLOSED IN THESE DRAWINGS MAY NOT INFRINGE PRIVATE RIGHTS OF OTHERS. NO LIABILITY IS ASSUMED WITH RESPECT TO THE USE OF, OR FOR DAMAGES RESULTING FROM THE USE OF ANY INFORMATION, APPARATUS, METHOD, OR PROCESS DISCLOSED IN THESE DRAWINGS. DRAWINGS MADE AVAILABLE FOR INFORMATION TO BIDDER ARE NOT TO BE USED FOR OTHER PURPOSES AND ARE TO BE RETURNED UPON REQUEST OF THE FORWARDING CONTRACTOR.

NUMBER OF SECTION OR DETAIL — DRAWING ON WHICH SECTION OR DETAIL IS SHOWN OR TAKEN

SECTION AND DETAIL KEY

THIS DOCUMENT CONTROLLED BY

CHANGE CONTROL SYSTEM _____

ENGINEERING PROCEDURE _____

REV	CHANGE TYPE	CHANGE CONTROL SYSTEM	CHANGE REQUEST NUMBER	DESCRIPTION	DSN	CHK	DEPT	DATE	PE	DATE	PJ	DATE	REQ	DATE	UTB	DATE	RPE	RPE NO	DATE	ST	CV	EC	EE	EM	IE	M	PD	SE	AR
0				CERTIFIED FOR CONSTRUCTION 12/9/02	CR	VGS											VGS	106009		RZ	AW	BWJ	AK	IM	DM	–	BWJ	–	TW

REVISION OR ISSUE PURPOSE — REVISION APPROVALS — SQUAD CHECK

RPE — REV. 0 DATE 12/9/02

DSN	C. RUNNING	12/09/02
DRW	L. MAKOVSKY	12/09/02
CHK	V. STEFFEN	12/09/02
DEPT		
PE	CLG	01/23/03
PJ	JS	1/23/03
REQ		1/24/03
UTB		

DRAWING APPROVALS

ORNL DRAWING NUMBER:

Knight/Jacobs Joint Venture
701 Scarboro Road, MS 8253
Oak Ridge, TN 37830

865-241-9433
fax 865-241-3400

m+w zander

M+W Zander U.S. Operations, Inc.
549 West Randolph Street
Chicago, IL 60661
Telephone: (312) 577-3200
Fax: (312) 577-3525

UT-BATTELLE

Oak Ridge National Laboratory
managed for the DEPARTMENT OF ENERGY under
U.S. GOVERNMENT contract DE-AC05-00OR22725
UT-BATTELLE, LLC. ⊕ Oak Ridge, Tennessee

PROJECT NAME:

CENTER FOR NANOPHASE MATERIALS SCIENCES
ELECTRICAL SINGLE LINE DIAGRAM
CN-SS2

1	48	49	50	PLANT	BLDG	FL	SH.	OF	TYPE	CLASS
3	E	X	X	8	8610		1	1	P	U
51		52		53	A/E DRAWING NUMBER:					REV
NC		NA			E2.12.41					0

AutoCAD