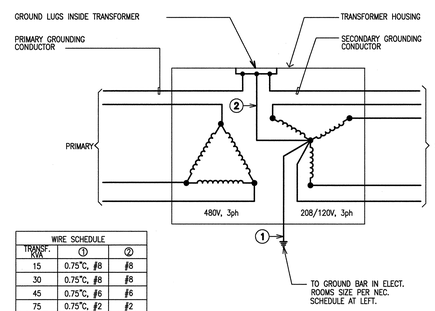

WIRE SCHEDULE		
TRANSF. KVA	①	②
15	0.75"C, #8	#8
30	0.75"C, #8	#8
45	0.75"C, #6	#6
75	0.75"C, #2	#2
112.5	1"C, #1/0	#1/0
150	1"C, #1/0	#1/0
225	1"C, #2/0	#2/0
300	1"C, #3/0	#3/0

11 TRANSFORMER GROUNDING SCHEMATIC DIAGRAM
SCALE: NOT TO SCALE

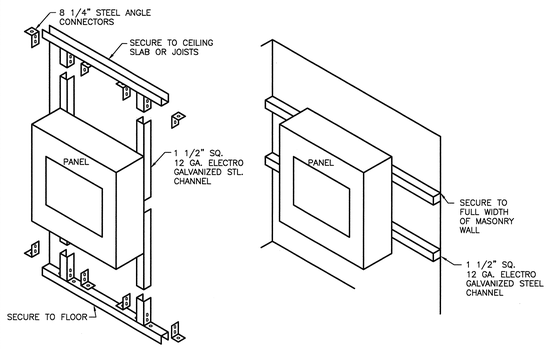

FOR DRY WALL INSTALLATION FOR MASONRY WALL INSTALLATION

8 TYPICAL PANELBOARD SURFACE MOUNTING

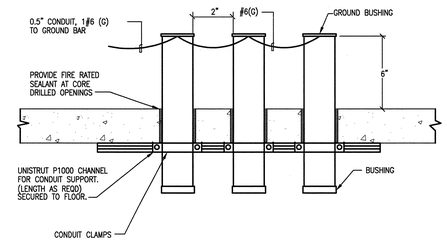

5 CONDUIT SLEEVE PENETRATION DETAIL

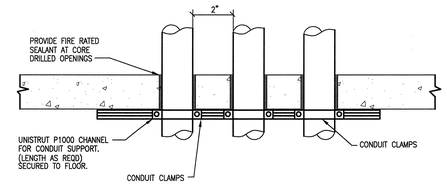

5A CONDUIT SLEEVE PENETRATION DETAIL

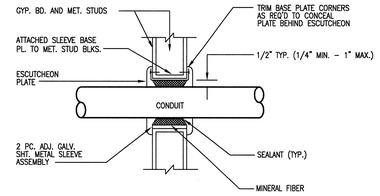

1 CONDUIT PENETRATION THRU FIRE WALL
SCALE: NOT TO SCALE

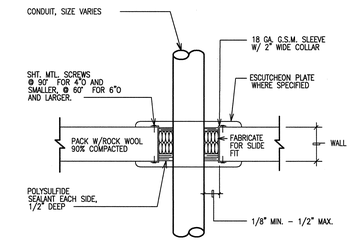

2 CONDUIT PENETRATION THRU PLENUM WALL
SCALE: NOT TO SCALE

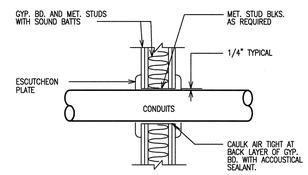

3 CONDUIT PENETRATION THRU SOUND WALL
SCALE: NOT TO SCALE

NOTE :
TRANSFORMERS UP TO AND INCLUDING 15KVA, SHALL BE WALL MOUNTED.
TRANSFORMERS ABOVE 15KVA SHALL BE FLOOR MOUNTED OR SUSPENDED FROM CEILING STRUCTURE.
TRANSFORMERS ABOVE 75KVA SHALL BE FLOOR MOUNTED.

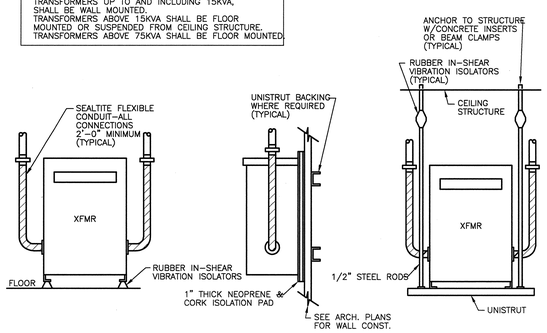

FLOOR MOUNTED WALL MOUNTED CEILING MOUNTED

12 DRY-TYPE TRANSFORMER AND CONNECTION

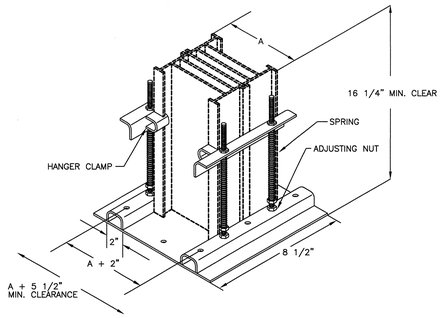

NOTE: FLOOR OR WALL OPENING SHOULD PROVIDE 1/2" CLEARANCE ALL AROUND BUSWAY. PROVIDE FIRE RATED SEALANT AT OPENINGS.

9 BUS DUCT RISER VERTICAL SUPPORT

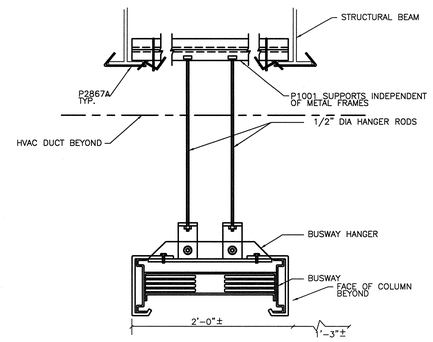

6 HORIZONTAL BUS DUCT SUPPORT

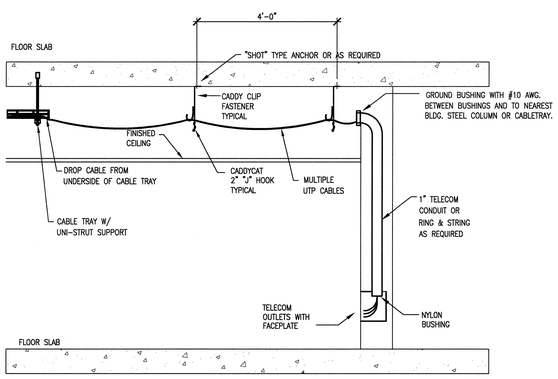

10 TYPICAL VOICE/DATA WALL OUTLET CABLE PATH
SCALE: NOT TO SCALE

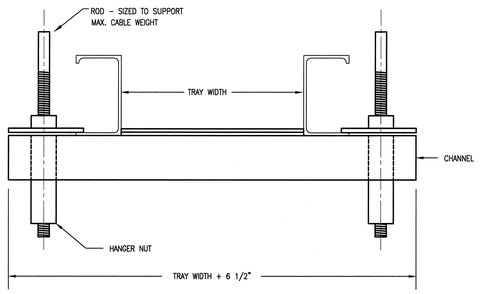

7 CABLE TRAY MOUNTING

4 NOT USED
SCALE: NOT TO SCALE

NO REPRESENTATION OR WARRANTY, EXPRESSED OR IMPLIED, IS MADE AS TO THE ACCURACY, COMPLETENESS OR USEFULNESS OF THE INFORMATION OR STATEMENTS CONTAINED IN THESE DRAWINGS, OR THAT THE USE OR DISCLOSURE OF ANY INFORMATION, APPARATUS, METHOD, OR PROCESS DISCLOSED IN THESE DRAWINGS MAY NOT INFRINGE PRIVATE RIGHTS OF OTHERS. NO LIABILITY IS ASSUMED WITH RESPECT TO THE USE OF, OR FOR DAMAGES RESULTING FROM THE USE OF ANY INFORMATION, APPARATUS, METHOD, OR PROCESS DISCLOSED IN THESE DRAWINGS. DRAWINGS MADE AVAILABLE FOR INFORMATION TO BIDDER ARE NOT TO BE USED FOR OTHER PURPOSES AND ARE TO BE RETURNED UPON REQUEST OF THE FORMAROND CONTRACTOR.

NUMBER OF SECTION OR DETAIL
DRAWING ON WHICH SECTION OR DETAIL IS SHOWN OR TAKEN
SECTION AND DETAIL KEY

THIS DOCUMENT CONTROLLED BY
CHANGE CONTROL SYSTEM 4
ENGINEERING PROCEDURE SNS-ENG-G001

REV	CHANGE TYPE	CHANGE CONTROL SYSTEM	CHANGE REQUEST NUMBER	DESCRIPTION	DSN	CHK	DEPT	DATE	PE	DATE	PJ	DATE	REQ	DATE	UTB	DATE	RPE	RPE NO	DATE	ST	CV	EC	EE	EM	IE	M	PD	SE	AR
1				CERTIFIED FOR CONSTRUCTION – 12/20/01	DD	RL											VGS	106009	12/20/01	RW	AW	BWJ	PD	BWJ	BWJ	--	BWJ	--	ED
0	–	–	–	CERTIFIED FOR CONSTRUCTION – 05/15/2001	DD	RL			CLG	10/1/01	GS	08/21/01					VGS	106009	5/15/01									

REVISION OR ISSUE PURPOSE — REVISION APPROVALS — SQUAD CHECK

RPE		
DSN	D.DANIELSON	5/15/01
DRW	S. BARNETT	5/15/01
CHK	R.LENNING	5/15/01
DEPT		
PE	C.CARREN	10/1/01
PJ	J. STELLERN	8/21/01
REQ		
UTB	J.LAWSON	10/8/01

VICTOR G. STEPP, REGISTERED ENGINEER, No. 016160, STATE OF TENNESSEE

1 12-17-01
REV. DATE

DRAWING APPROVALS

108031400-E8E-8600-A120

Knight Jacobs
Knight/Jacobs Joint Venture
701 Scarboro Road, MS 8253
Oak Ridge, TN 37830
865-241-9433
fax 865-241-3400

KNIGHT
Knight Advanced Technology
4710 East Elwood, Suite 19
Phoenix, AZ 85040

UT-BATTELLE
Oak Ridge National Laboratory
managed for the DEPARTMENT OF ENERGY under U.S. GOVERNMENT contract DE-AC05-00OR22725
UT-BATTELLE, LLC. • Oak Ridge, Tennessee

PROJECT NAME:
SPALLATION NEUTRON SOURCE
CENTRAL LAB AND OFFICE BUILDING
ELECTRICAL DETAILS
SHEET 2

1	48	49	50	PLANT	BLDG	FL	SH.	OF	TYPE	CLASS
3	E	X	X	8	8600		1	1	P	U
51		52		53	WBS					REV
NC		NA			1.8.3.14		E8.10.47			1

Date: 04/21/2001 Time: 14:59:43
File: P:_ALL\PROJECTS\SNS\ENG_CAD\ENG_SR\ENG_CADD\ENG_SR\AL_FLOY\E8.10.47.DWG
AutoCAD