SIMCON and AMC Board

Tomasz Jezynski

DESY
Hamburg, Germany

email: tomasz.jezynski@desy.de

SIMCON-DSP

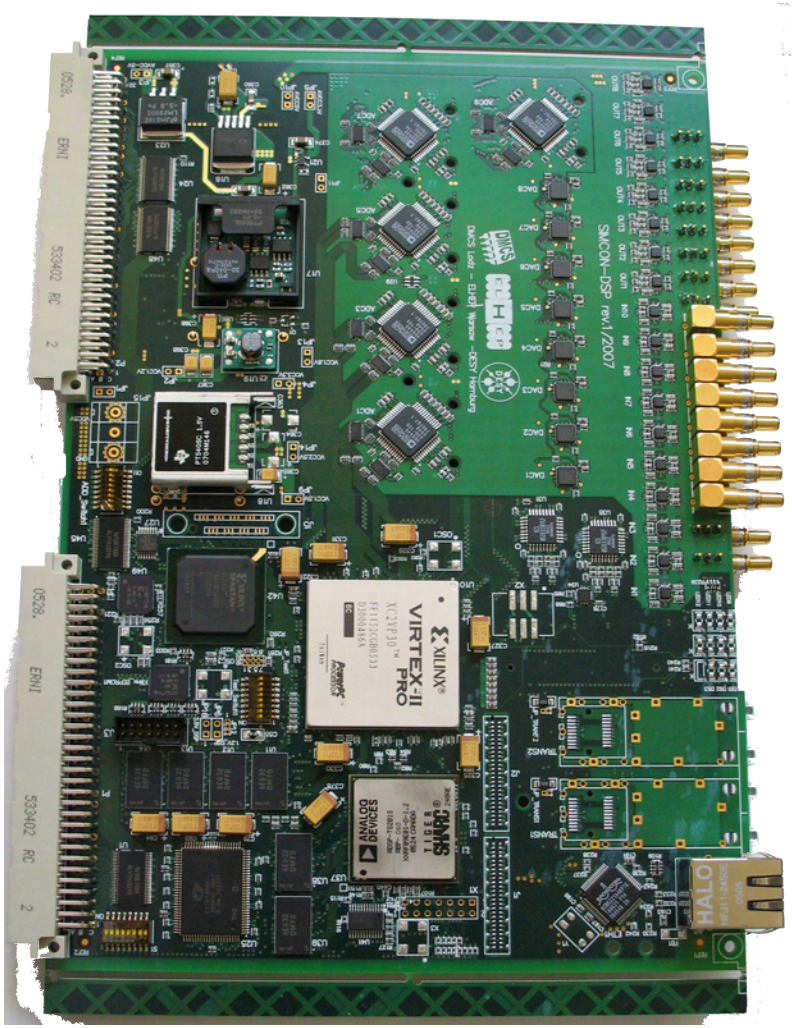

- DSP processor – **ADSP-TS201SABP-060,**
  - Floating Point Processor Unit, with clock 600MHz, 24 Mbits
  - on-chip memory
  - 576-PBGA package.
  - 128/256 Mb SDRAM memory dedicated to DSP
  - EEPROM for DSP program
- 128/256/384/512 Mb for Xilinx PowerPC
- SystemACE – CF for PowerPC
- separate clock distribution for ADCs and DACs
- VME interface support 64 bits transfer through 32 bits bus (according to VME specification)
- 10 ADC (14 bits, 105MSPS)
- up to 8 DACs available on board
- single power supply (standalone work)

Features of the SIMCON-DSP

	Virtex II Pro Family (package FF1152)			
Subcomponents	**P20**	**P30**	**P40**	**P50**
DSP	+	+	+	+
RS232	+	+	+	+
VME Interface	+	+	+	+
Digital I/O	+	+	+	+
SystemACE	--	+	+	+
Ethernet	--	+	+	+
SRAM	36 Mb (1024k x 36 bits)			
No. of ADCs	10			
Optical Gigalink	2			
No. of DACs	5		8	
SDRAM (for PPC)	--	128/256/384/512 Mb		

LLRF System Based on ATCA

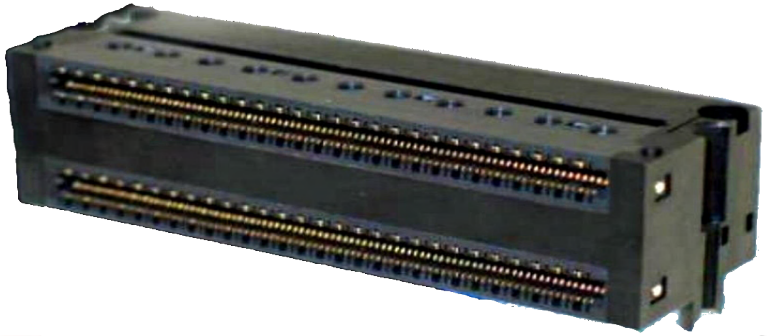

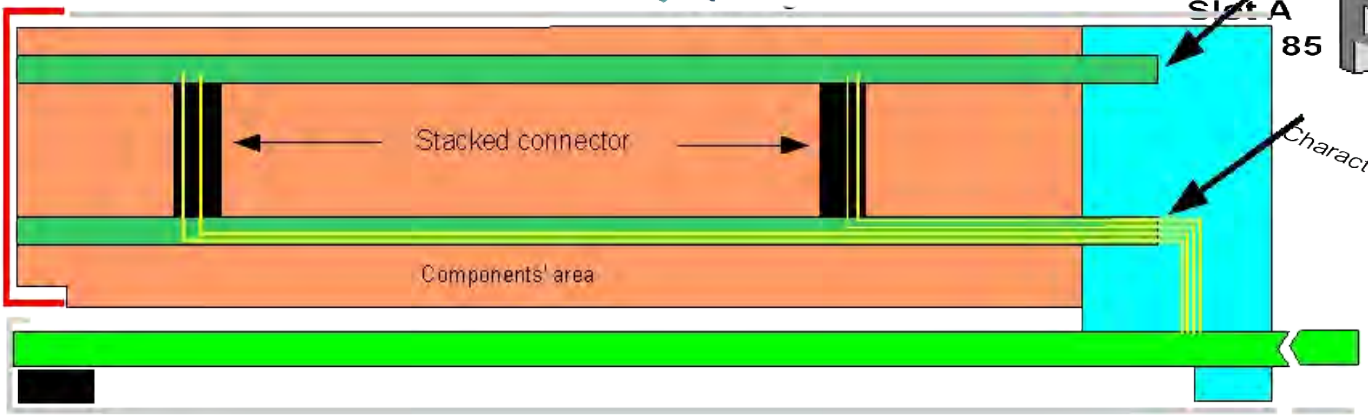

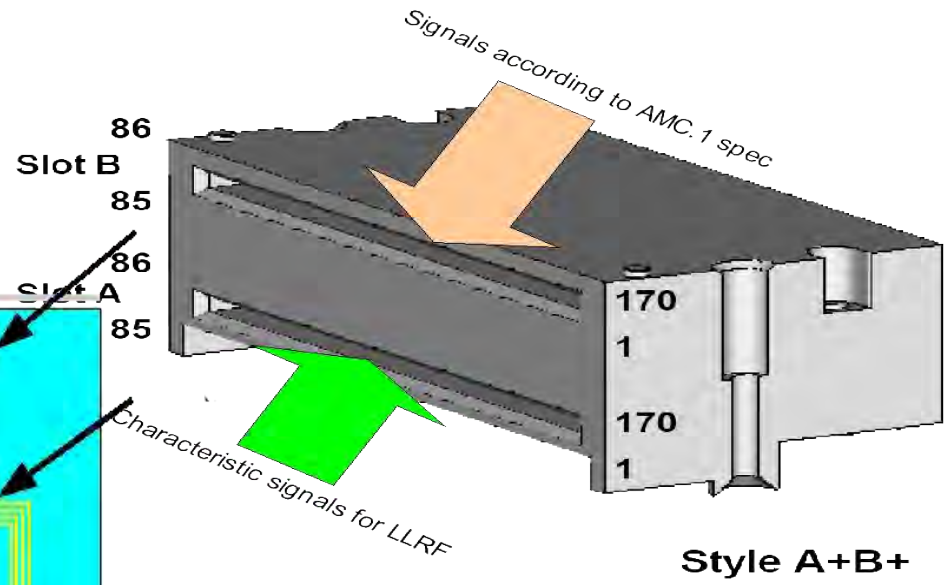

Clk. & Trig. signals

10 diff. pairs for low latency link

Analog signals

DSP signals

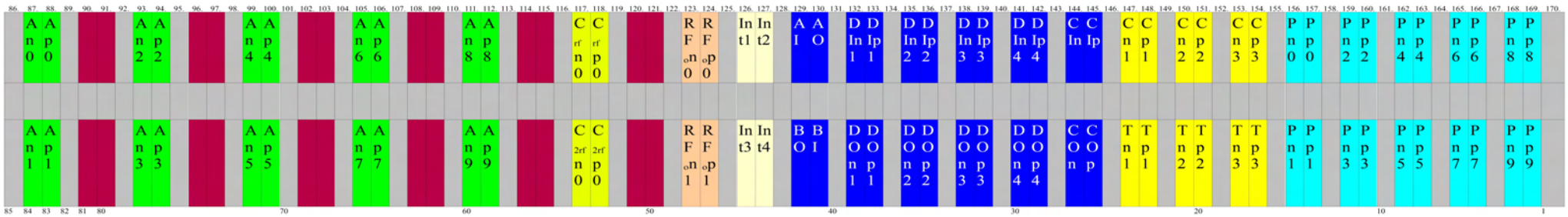

DESY-AMC BAY

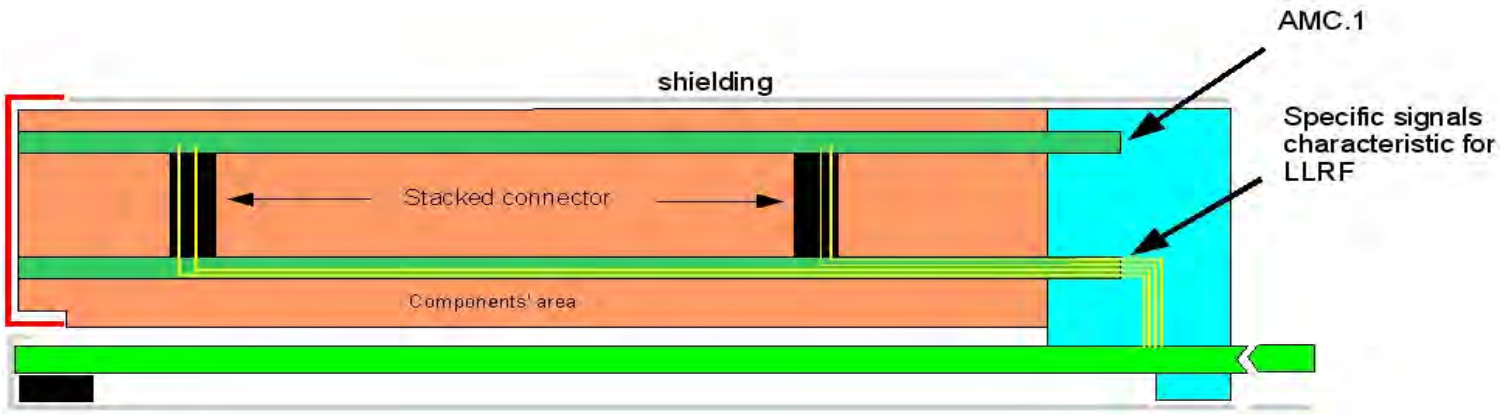

DESY-AMC

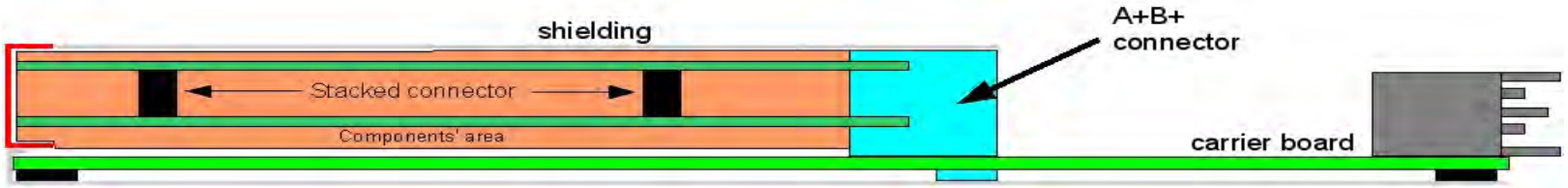

AMC half height

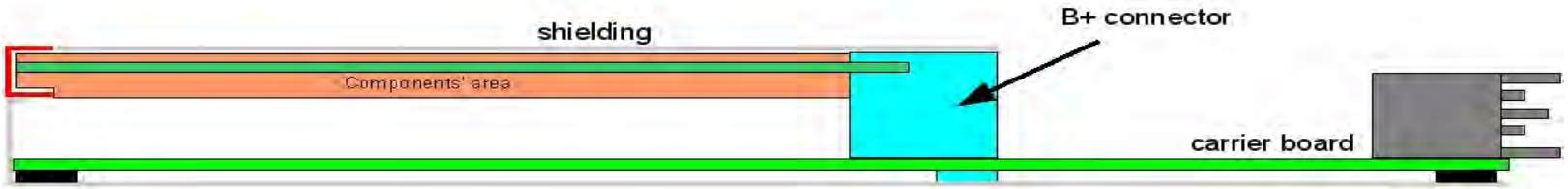

AMC full height

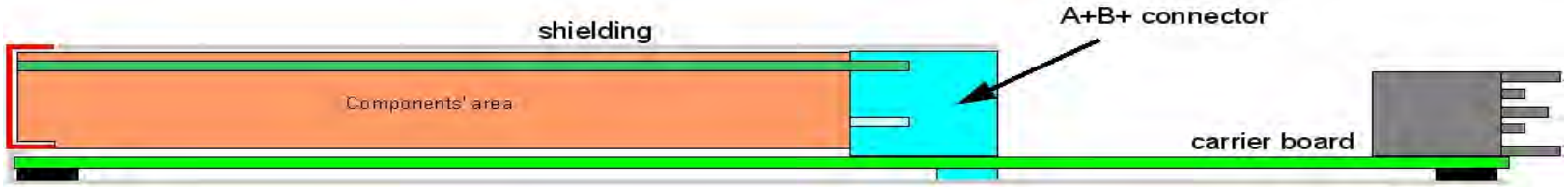

Features of the SIMCON-DSP

- DSP processor – **ADSP-TS201SABP-060,**
  - Floating Point Processor Unit, with clock 600MHz, 24 Mbits
  - on-chip memory
  - 576-PBGA package.
  - 128/256 Mb SDRAM memory dedicated to DSP
  - EEPROM for DSP program
- 128/256/384/512 Mb for Xilinx PowerPC
- SystemACE – compact flash disk for PowerPC
- separate clock distribution for ADCs and DACs
- VME interface support 64 bits transfer through 32 bits bus (according to VME specification)
- 10 ADC (14 bits, 105MSPS)
- up to 8 DACs available on board (depending on FPGA size)
- single power supply (possible standalone work)

SIMCON-DSP

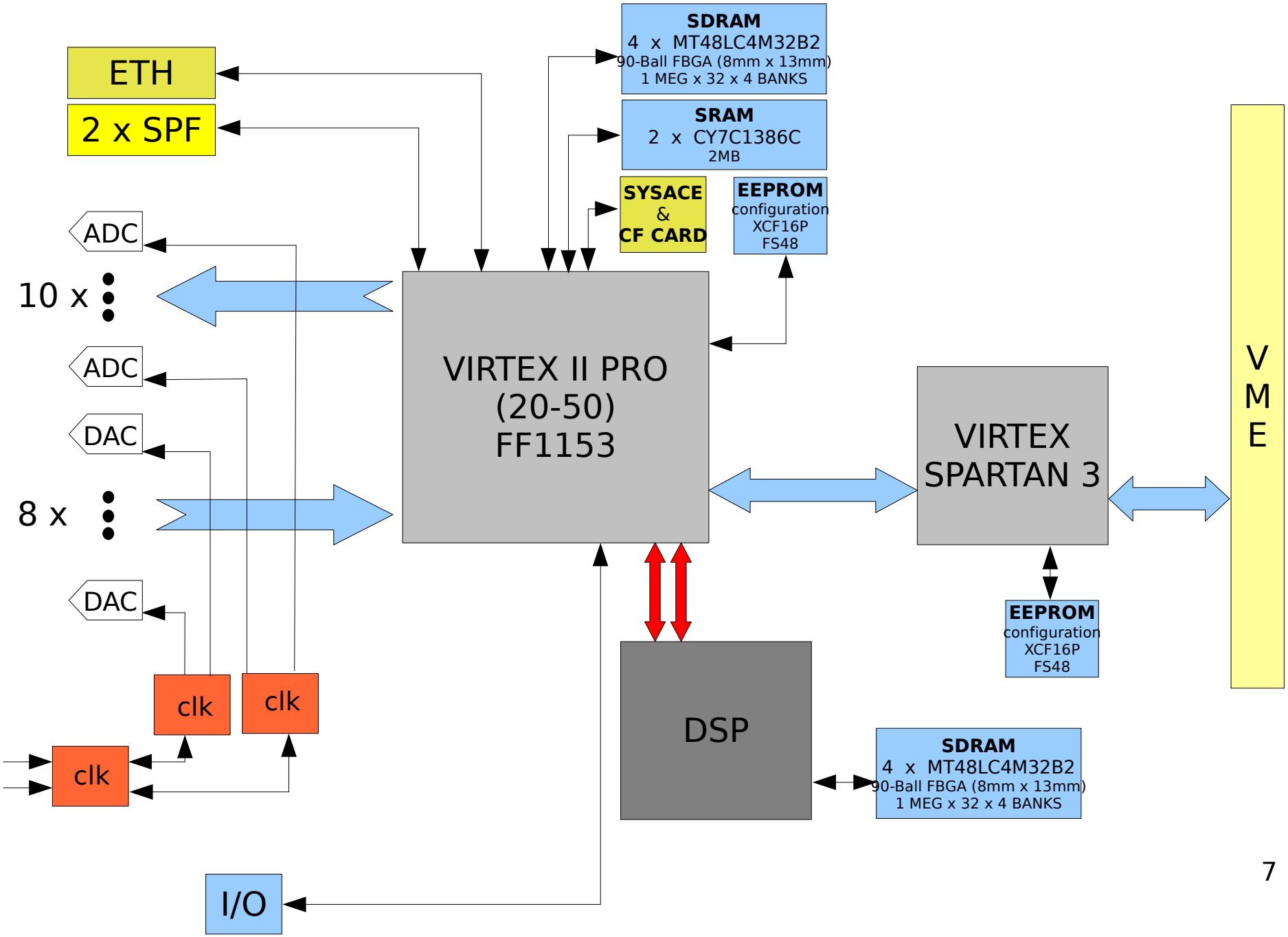
ETH
2 x SPF
SDRAM
4 x MT48LC4M32B2
90-Ball FBGA (8mm x 13mm)
1 MEG x 32 x 4 BANKS
SRAM
2 x CY7C1386C
2MB
SYSACE
&
CF CARD
EEPROM
configuration
XCF16P
FS48
ADC
10 x
ADC
DAC
8 x
DAC
VIRTEX II PRO
(20-50)
FF1153
VIRTEX
SPARTAN 3
V
M
E
EEPROM
configuration
XCF16P
FS48
clk
clk
clk
DSP
SDRAM
4 x MT48LC4M32B2
90-Ball FBGA (8mm x 13mm)
1 MEG x 32 x 4 BANKS
I/O

SIMCON-DSP -> AMC Module

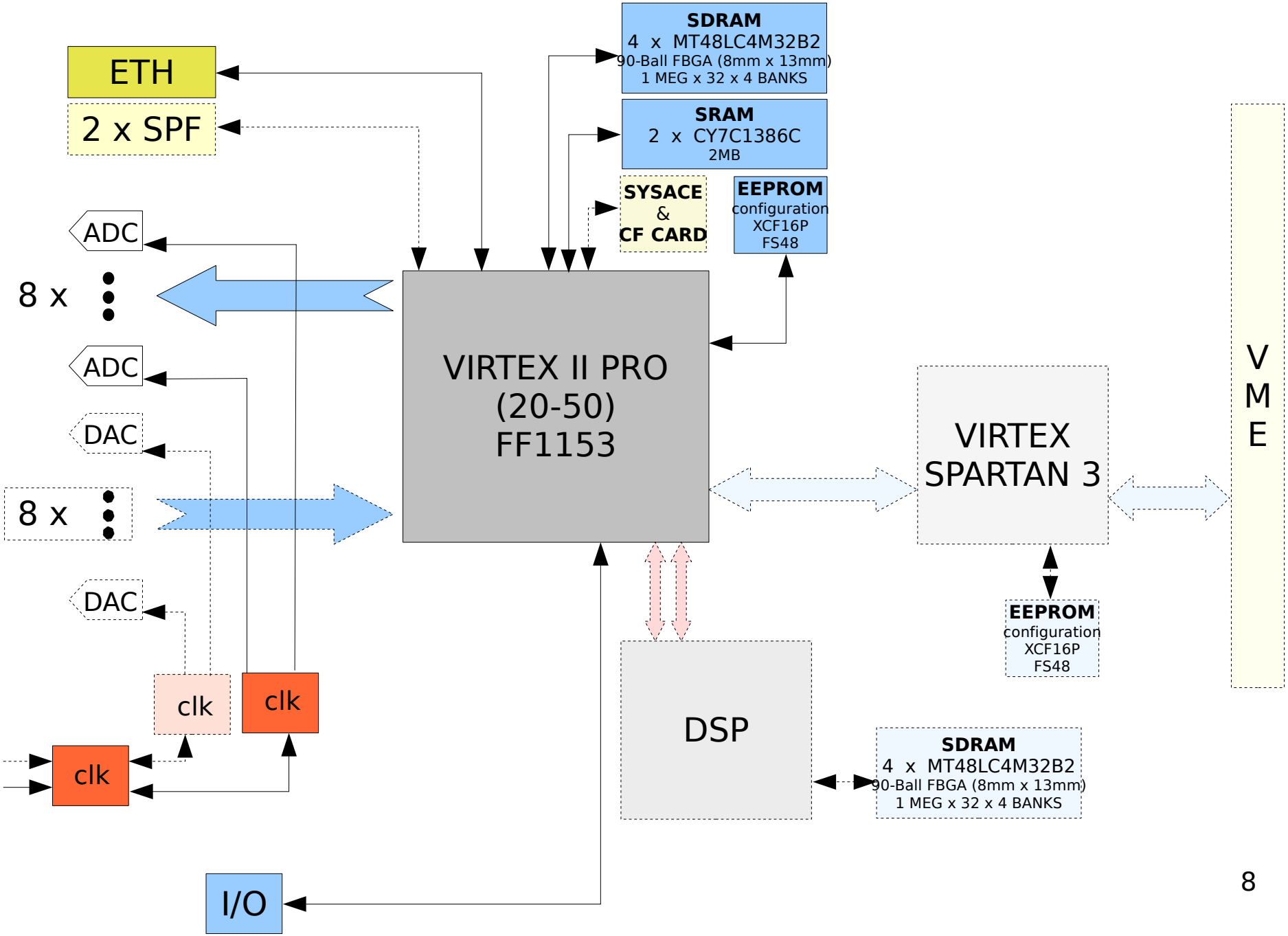

SIMCON-DSP -> AMC Module

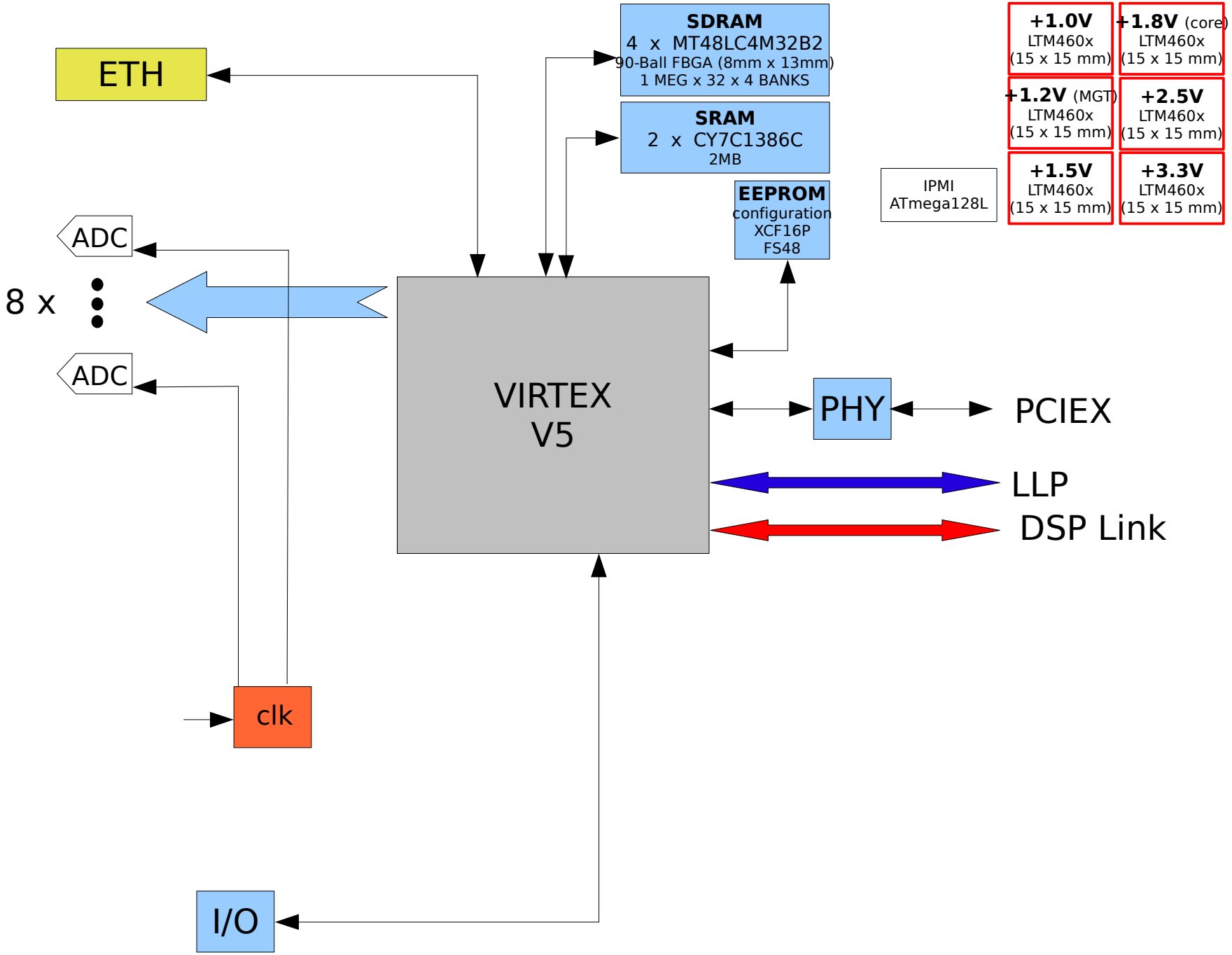

AMC Module

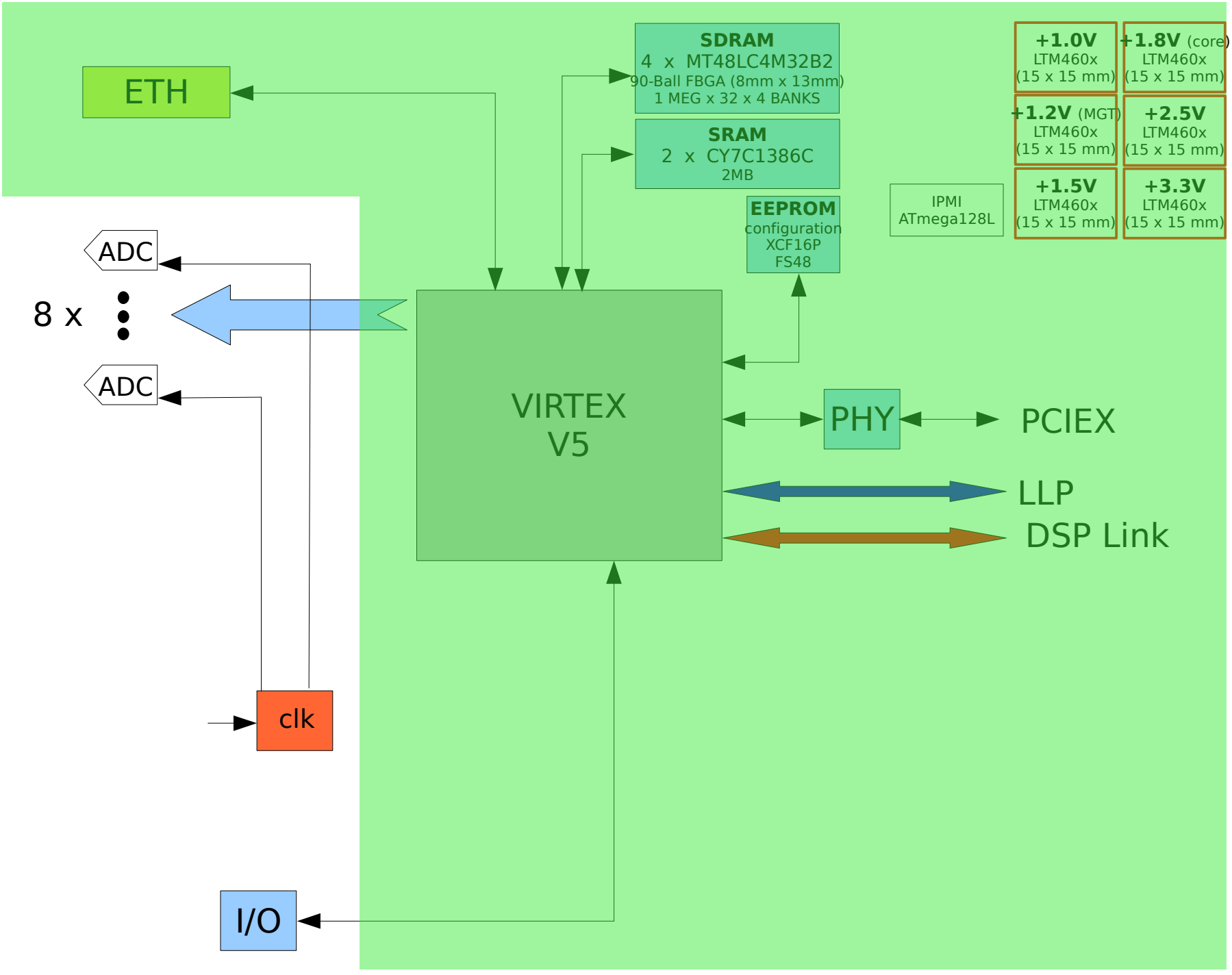
ETH
SDRAM
4 x MT48LC4M32B2
90-Ball FBGA (8mm x 13mm)
1 MEG x 32 x 4 BANKS
SRAM
2 x CY7C1386C
2MB
EEPROM
configuration
XCF16P
FS48
IPMI
ATmega128L
+1.0V
LTM460x
(15 x 15 mm)
+1.8V (core)
LTM460x
(15 x 15 mm)
+1.2V (MGT)
LTM460x
(15 x 15 mm)
+2.5V
LTM460x
(15 x 15 mm)
+1.5V
LTM460x
(15 x 15 mm)
+3.3V
LTM460x
(15 x 15 mm)
ADC
8 x
ADC
VIRTEX
V5
PHY
PCIEX
LLP
DSP Link
clk
I/O

ADC - AMC Module

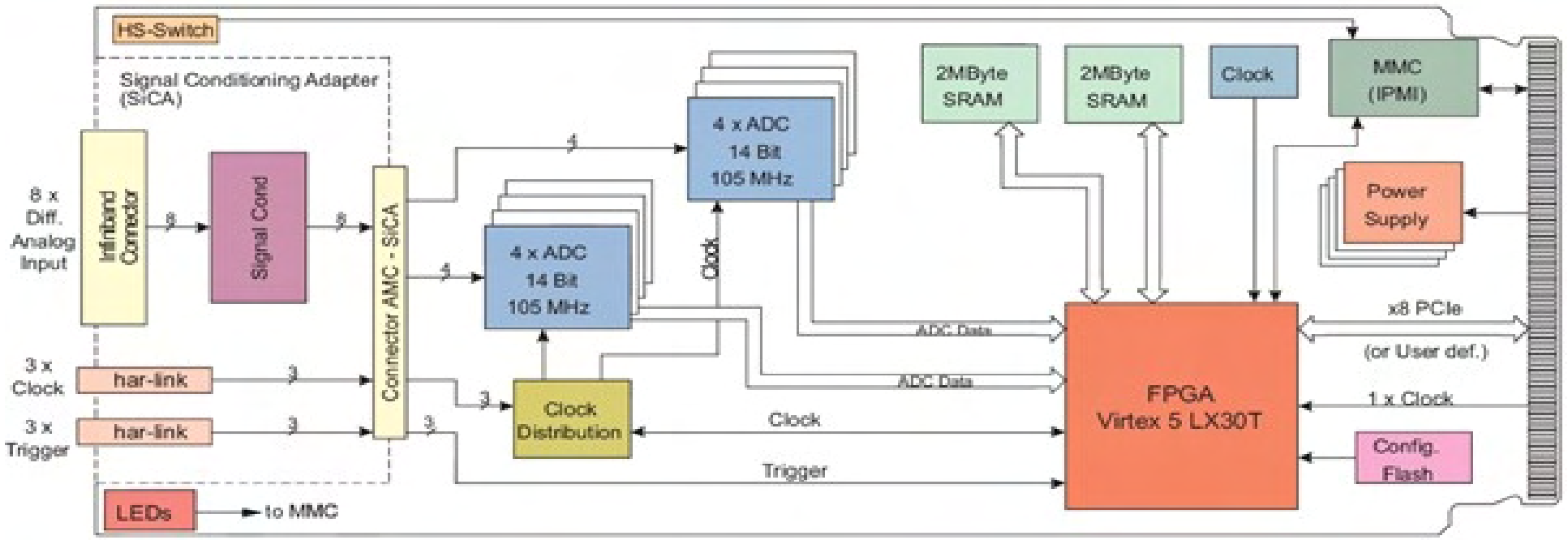
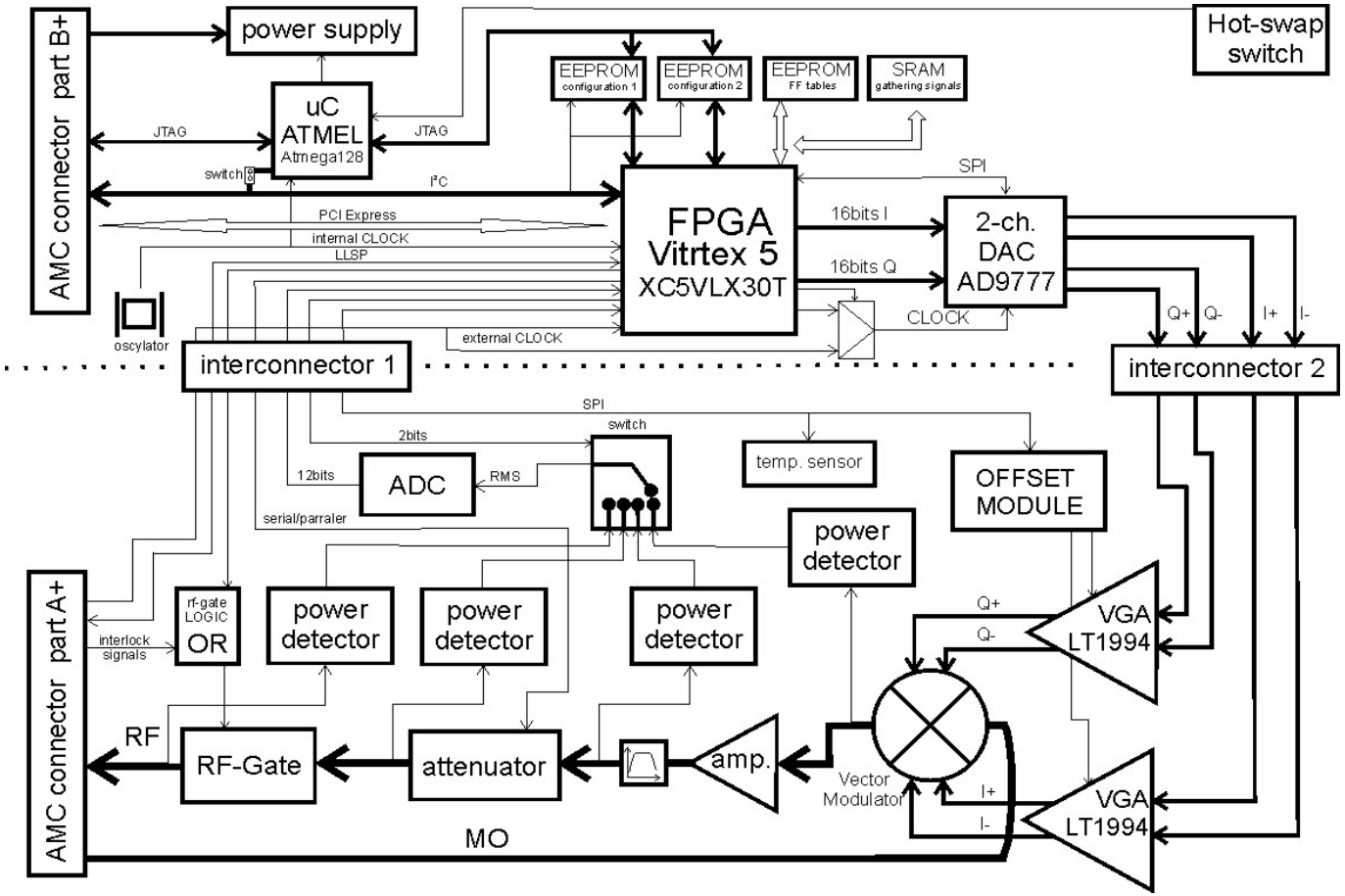
Vector modulator - AMC Module