Stanford Linear Accelerator Center

Hunting for Performance-Limiting Distortions in LLRF Feedback Loops

Dan Van Winkle

SLAC

Acknowledgements

This talk is the result of many people. Too many to list here. However, some folks deserve special recognition because without them, none of this work would have been completed. They are:

Technical Review and Discussions:

John Fox, Dmitry Teytelman, Claudio Rivetta, Themis Mastorides, Mike Browne, John Dusatko, Jim Sebek(SLAC) Philippe Baudrenghien (CERN)

Original Concept and Design

Paul Corredoura, Rich Tighe and Flemming Pedersen

Support and Permission

Uli Wienands, John Seeman, Mike Sullivan

All this work was done under contract #DE-AC02-76SF00515 from the U.S. Department of Energy

A Brief Outline

- Goals for the Talk
- Overview of the PEP-II RF System
- Purpose of RF systems
- A walk down memory lane
- Ideas and experiments
- A Model comes to the rescue
- The smoking gun
- Resolution
- Future Directions

Goals

- Review CW RF feedback systems used in circulating storage rings
- Highlight some “new” measurement techniques
- Pass on some experience so others can learn from our journey

The PEP-II LLRF

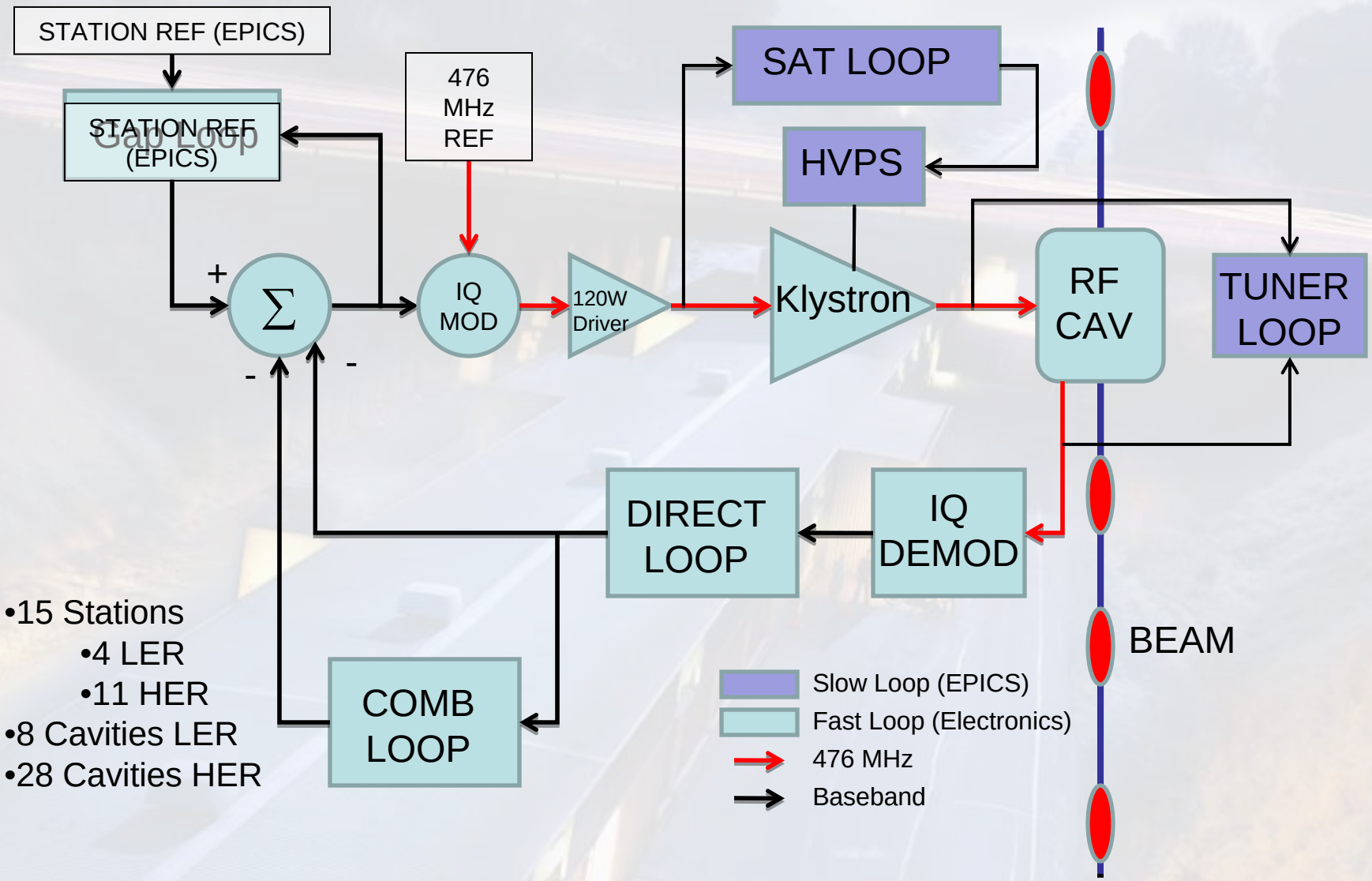

- 15 Stations
  - 4 LER
  - 11 HER
- 8 Cavities LER
- 28 Cavities HER

Photo Gallery (PEP-II)

- LLRF Station

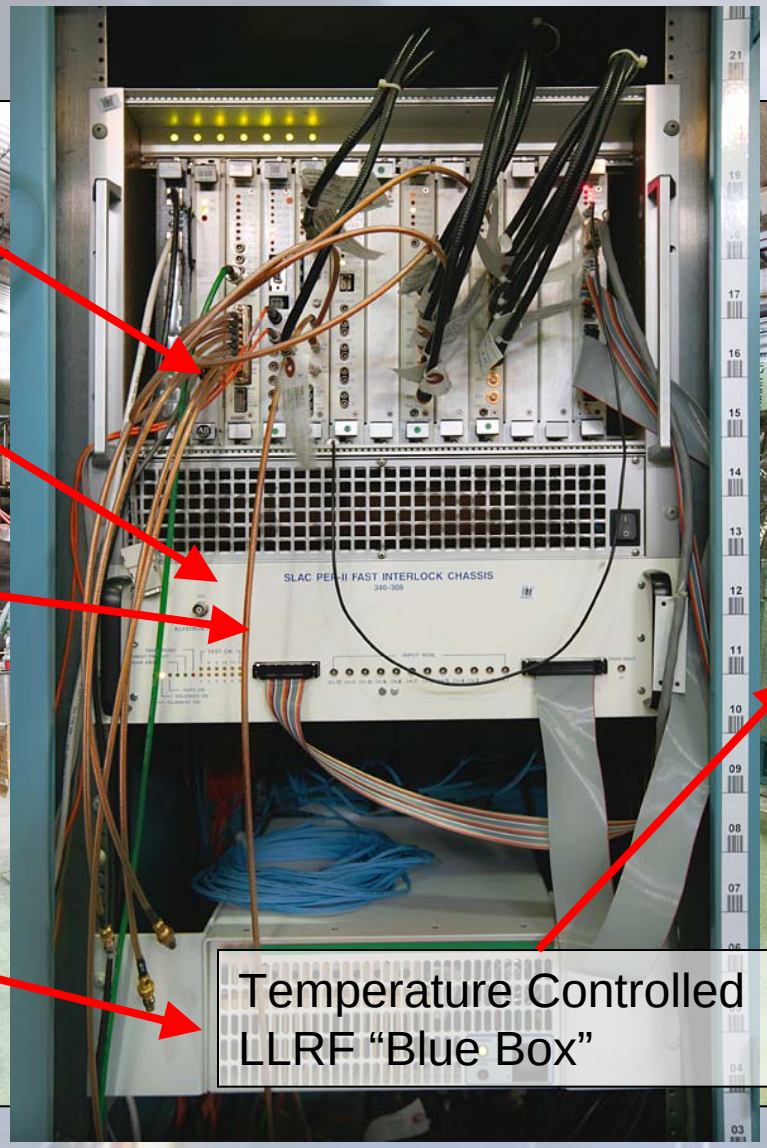

LLRF VXI Crate

1.2 MW Klystron

Fast Interlock Chassis

120W Klystron Pre-Amplifier

Temperature Controlled LLRF “Blue Box”

Photo Gallery (PEP-II)

- Cavities in Tunnel

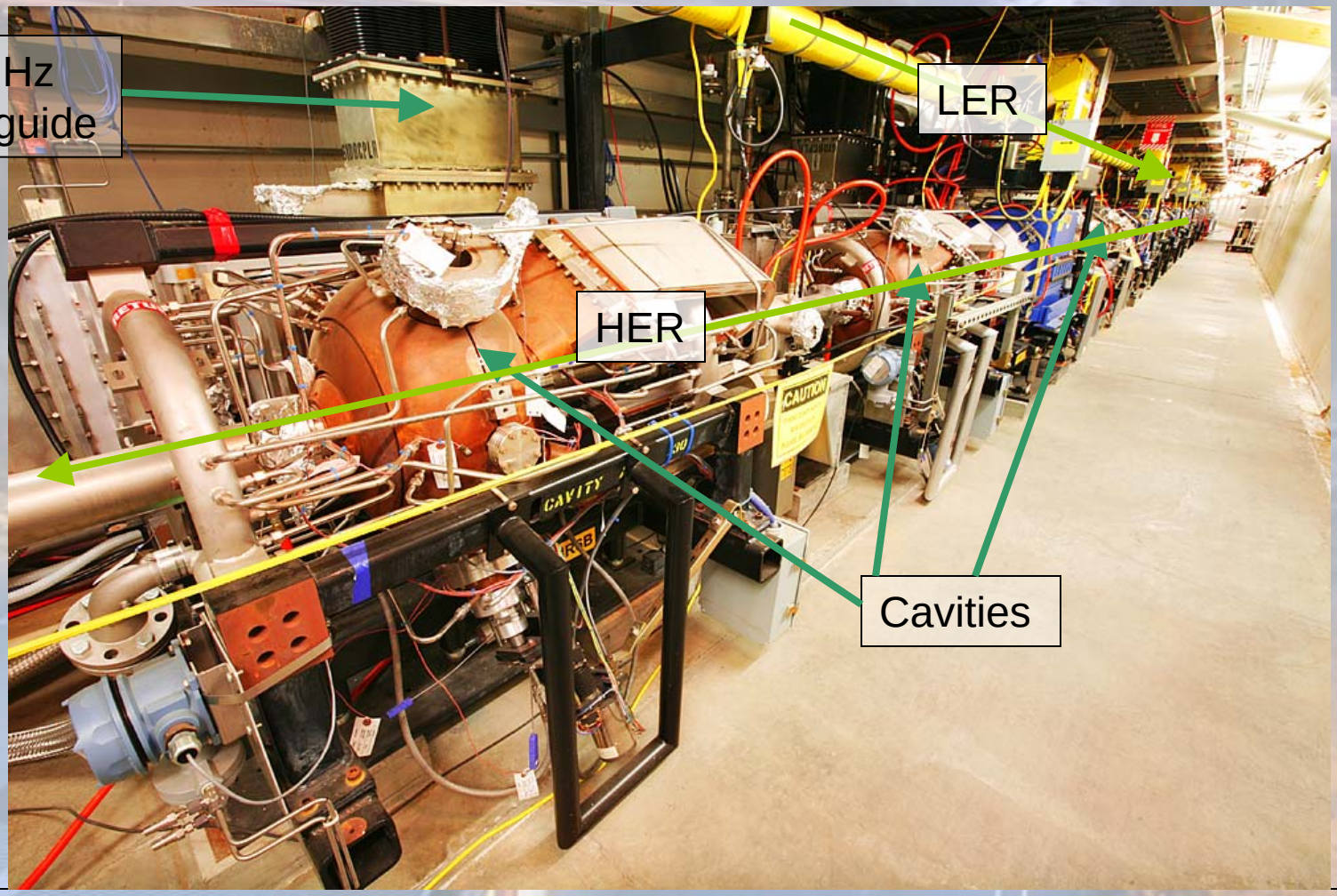

Purpose of RF Systems

- To present minimal fundamental impedance to the beam
- Restore energy from synchrotron radiation losses
- Provide control over station phase relative to the beam
- In Hadron machines, provide final acceleration

A WALK DOWN MEMORY LANE

- In 2003 grow/damp measurements were performed in an attempt to understand:
  - What the current growth rates were vs. what a linear model predicts
  - The effective damping rates.

- The grow/damps showed surprisingly high growth rates (5 to 10X greater than those predicted by a linear model)

Ideas and Experiments

- The likely target for the cause was thought to be reduced impedance control due to klystron saturation.
- Sandro Gallo (LNF-INFN) came up with the idea of a klystron linearizer.
- At the same time, a non-linear modeling effort was resurrected.

Ideas and Experiments

- Klystron Linearizer Idea

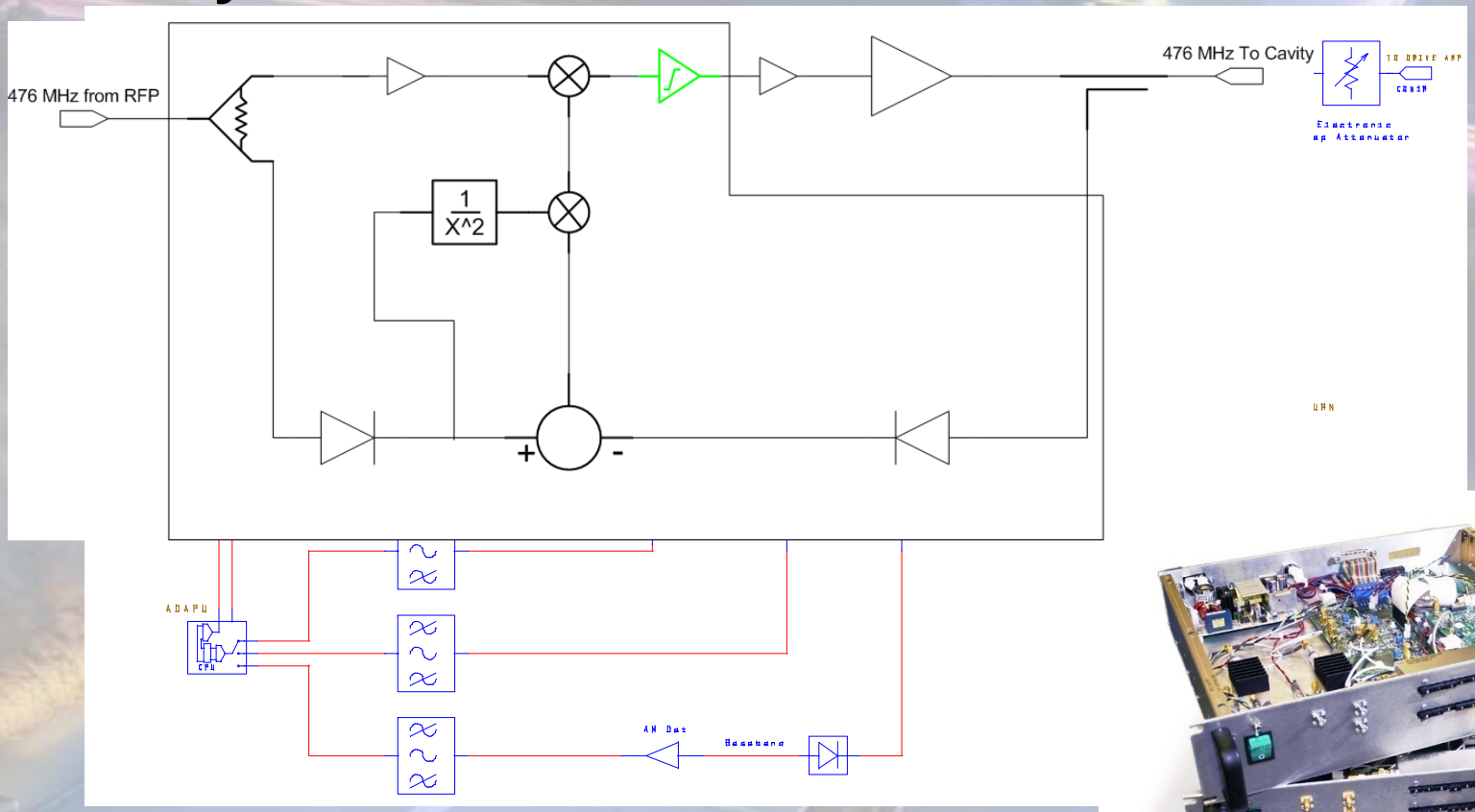

As usual, things start with simple ideas
…and end up being much more complicated.

Ideas and Experiments

Linearizer showed no real improvement when carefully compared to similar station operating conditions (same direct and comb gain setpoints)

Transfer functions looked better, but power supply ripple did not.

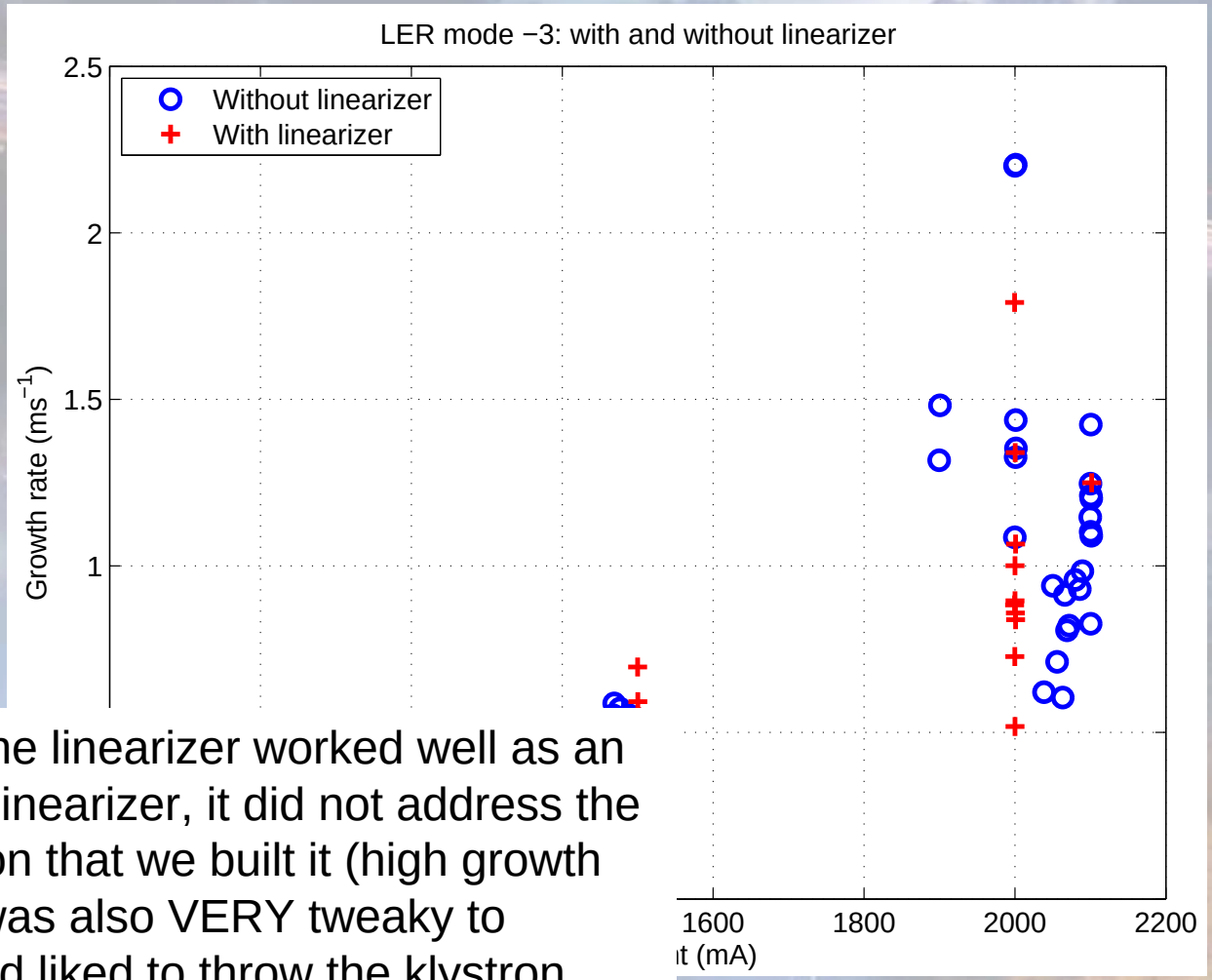

Although the linearizer worked well as an amplitude linearizer, it did not address the main reason that we built it (high growth rates). It was also VERY tweaky to operate and liked to throw the klystron over the top

Ideas and Experiments

- At the same time as the linearizer development was going on, we had started a full blown non-linear model development effort.
- Claudio Rivetta was the lead on this effort and the initial results are well documented in the PRST paper:
  - http://prst-ab.aps.org/pdf/PRSTAB/v10/i2/e022801

Ideas and Experiments

- As part of the non-linear model development, we measured the frequency response of our modulator/pre-amp/Klystron Path using our built-in “network analyzer” capabilities

Ideas and Experiments

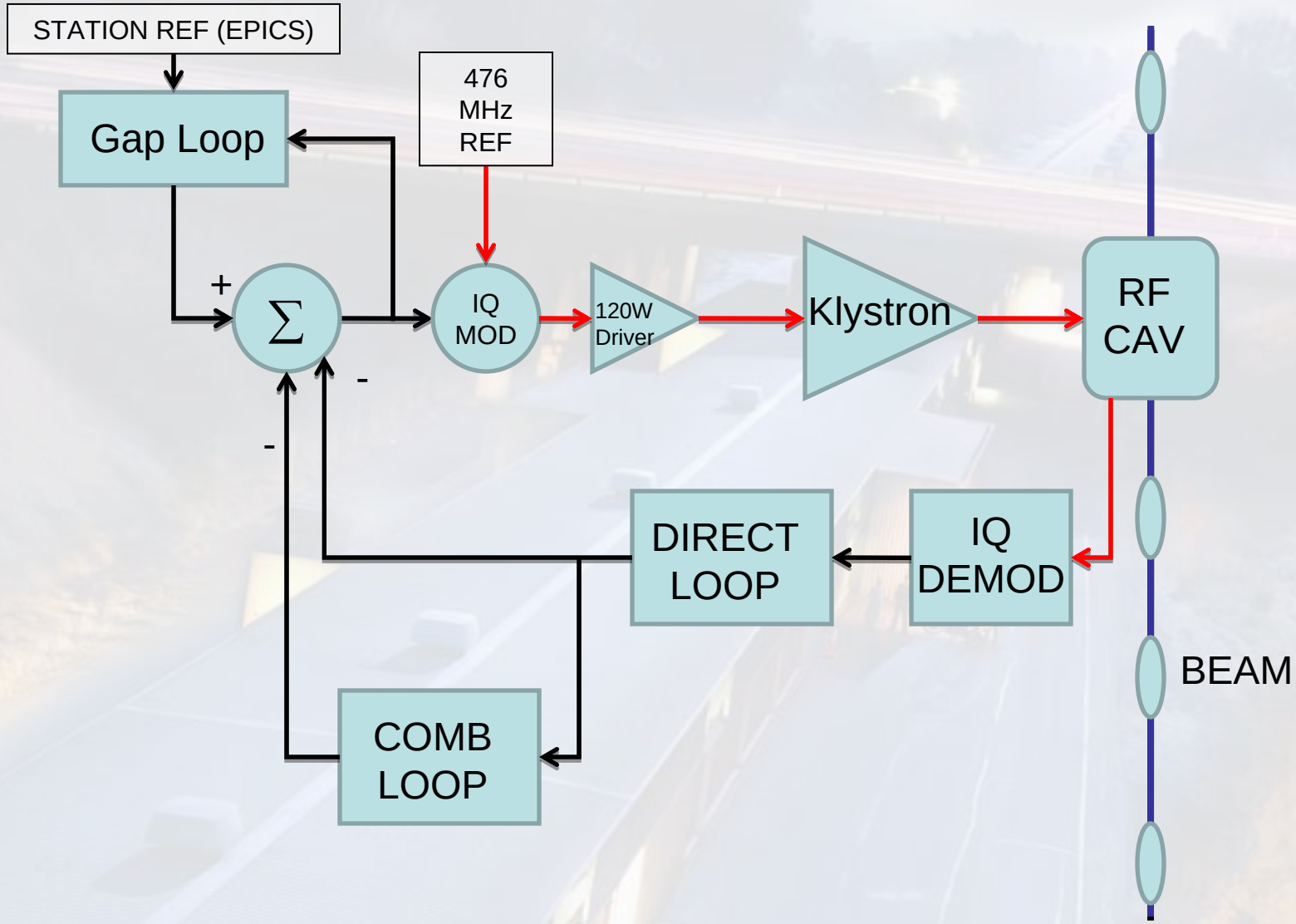

Ideas and Experiments

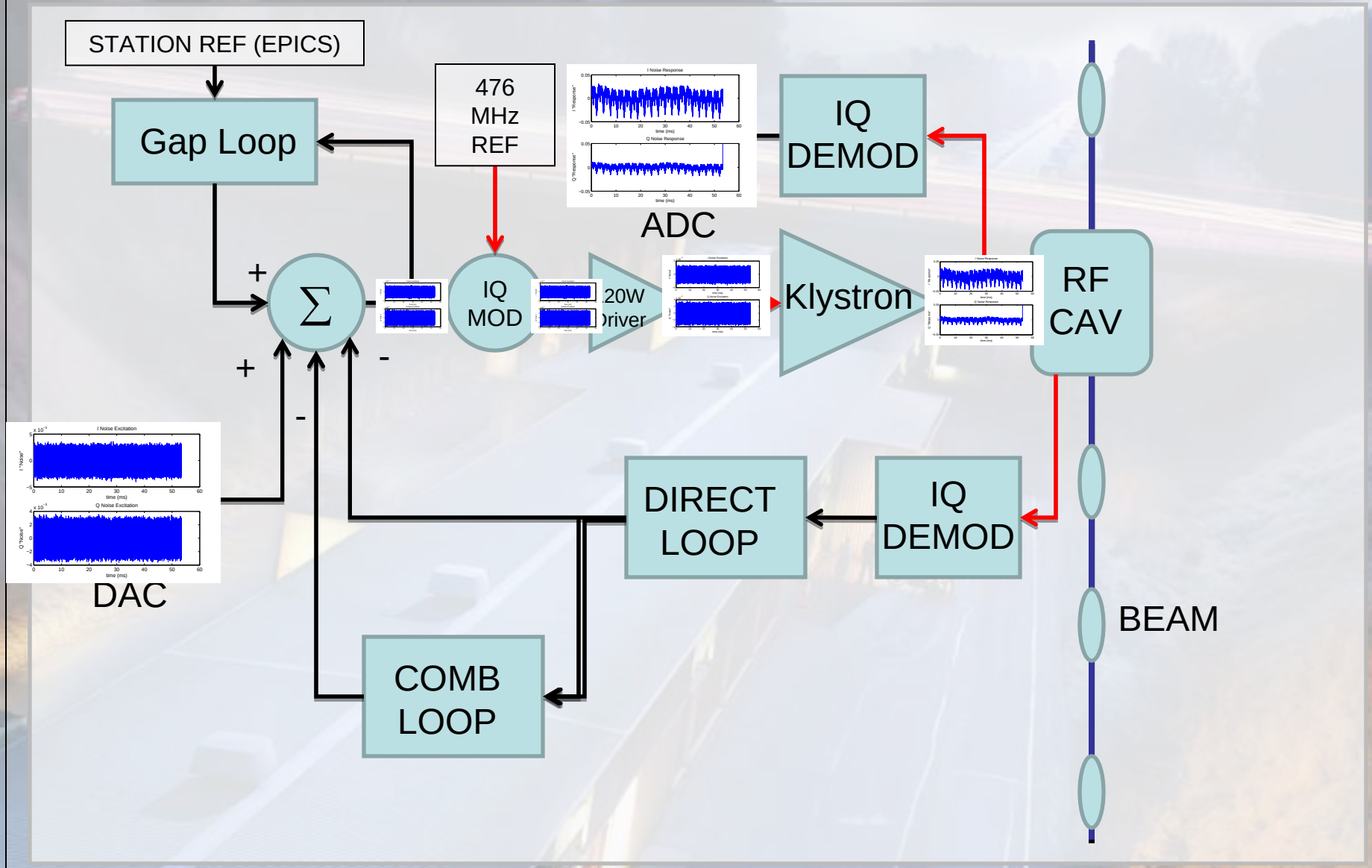

May 2006 - Measurements

Matlab on Resultant Data Files (TFE function)

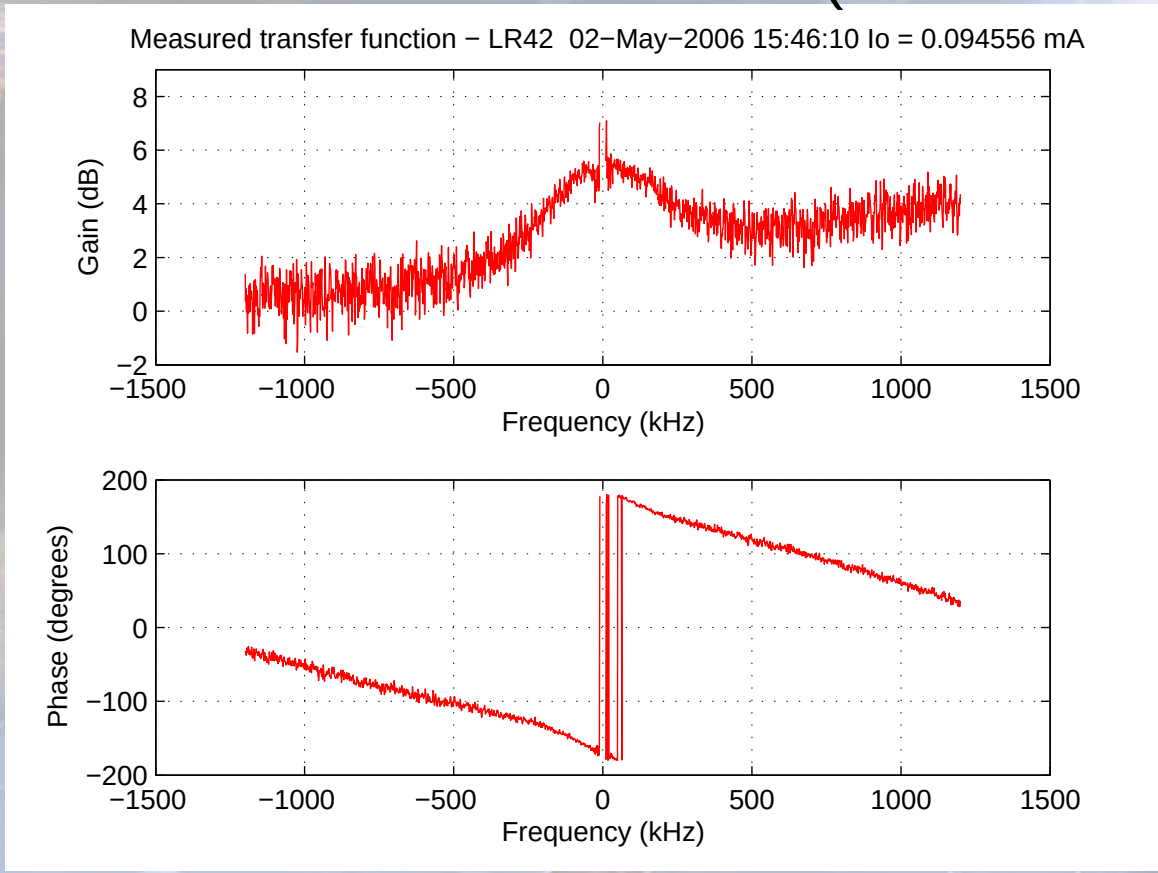

All Drive Amps

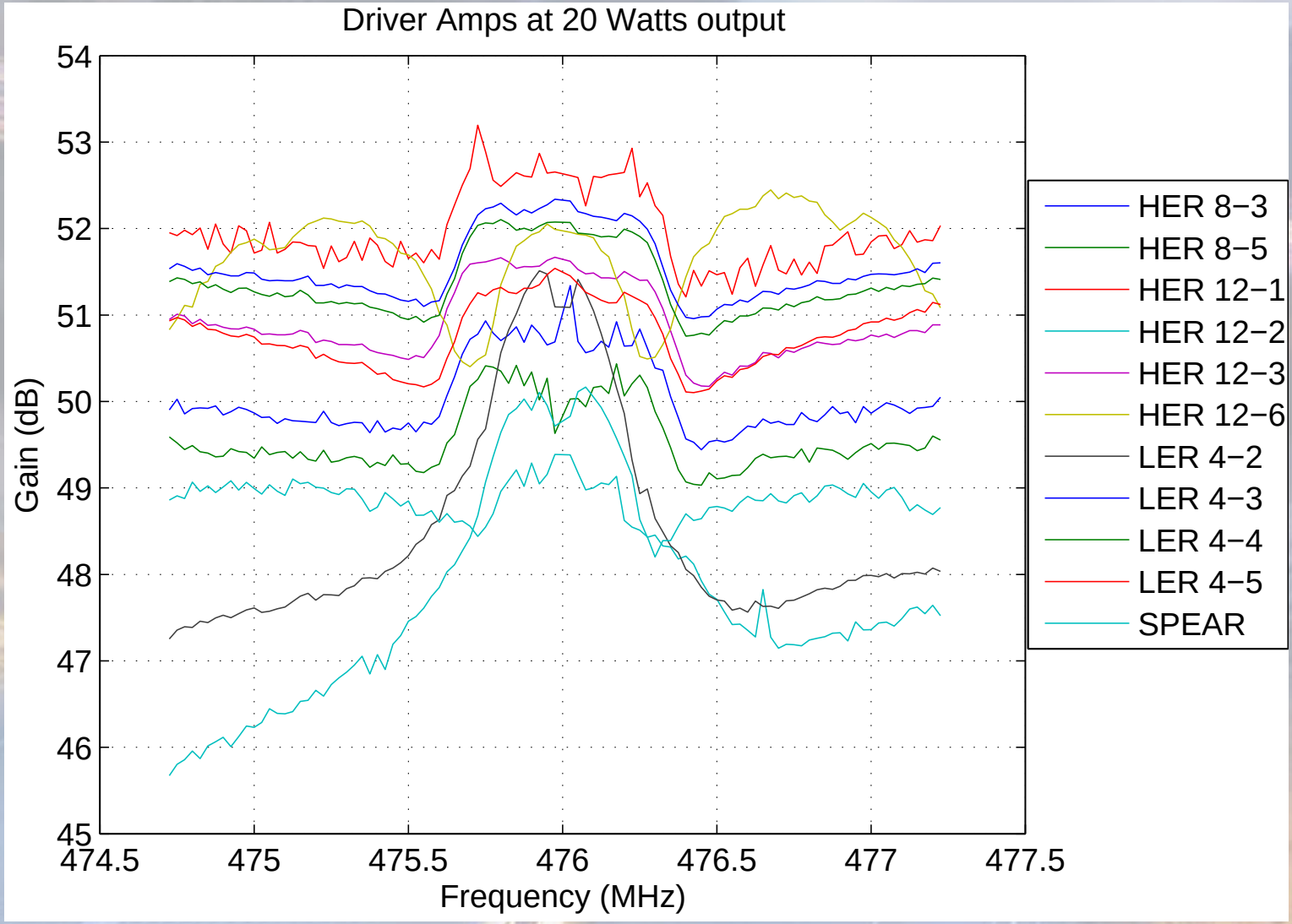

Ideas and Experiments

- What the heck? What were these weird responses we were seeing? Especially in LR4-2.
- We began to devise complicated schemes that could measure the Klystrons (we were still thinking Klystrons at this point) to see if we could replicate these results in the test stand (stand alone Klystron).
- We had lots of exotic ideas involving mixers and modulators swept with network analyzers and then complicated detection schemes to demodulate the resultant signal…
- At one of the conferences (EPAC ’06) John Fox had a discussion with Philippe Baudrenghien about what we were seeing with these measurements of amplifiers and he (Philippe) suggested a technique that none of us had thought of…namely: Sweep the network analyzer below the carrier.

- But first…why are we measuring things this way? Why not just sweep with a network analyzer?

Ideas and Experiments

Recorded Klystron Forward Signal at 1900mA

Klystron output signal in our system is a large CW carrier with small modulations around it mostly at the revolution harmonics (-50 dB)

Out “built in” network analyzer does a similar thing. It modulates the carrier with a noise like signal in I&Q and then demodulates it.

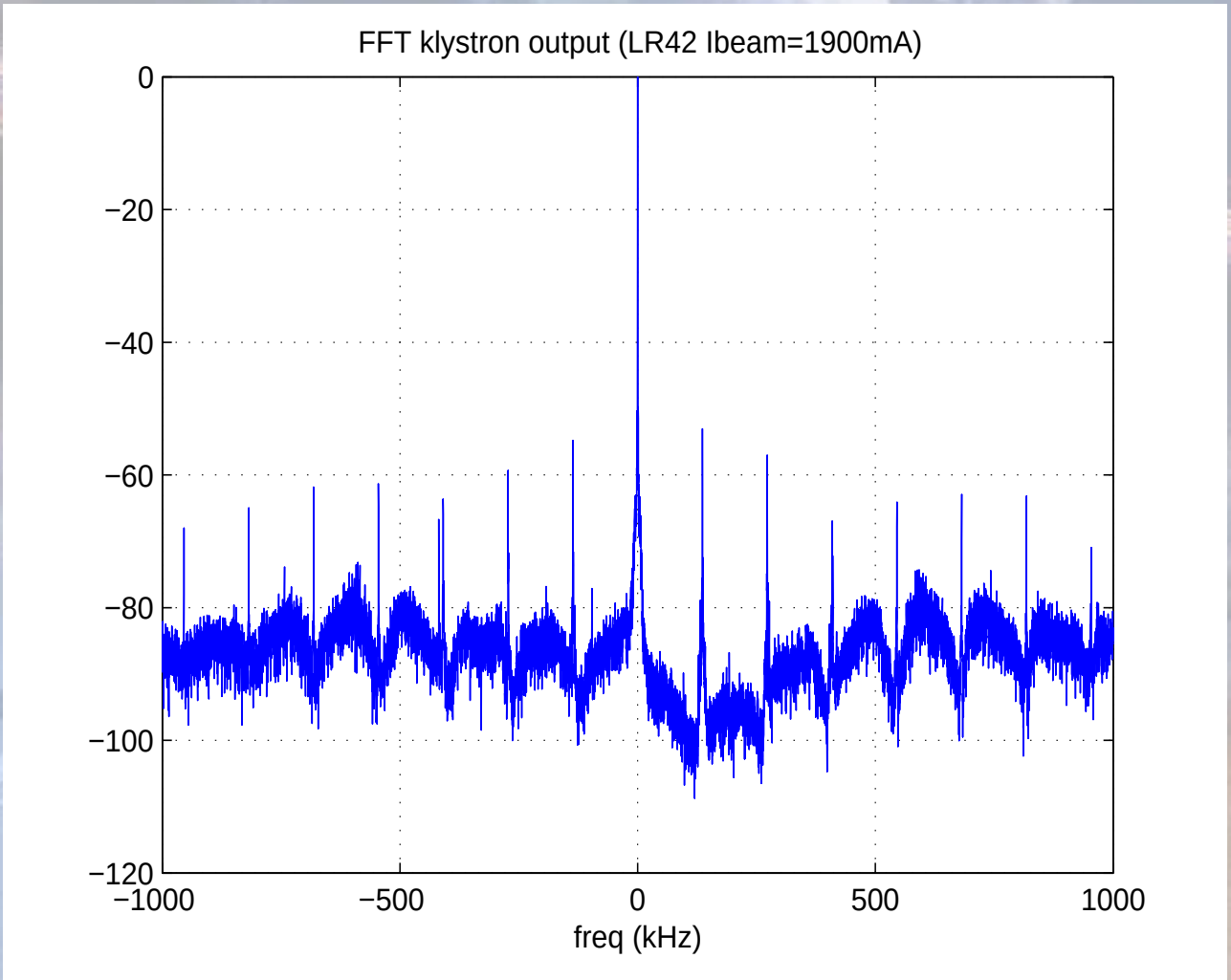

Test Stand Measurements

- The test stand allows us to make non-beam invasive measurements.

Small/Large Signal

Swept Low Level Carrier

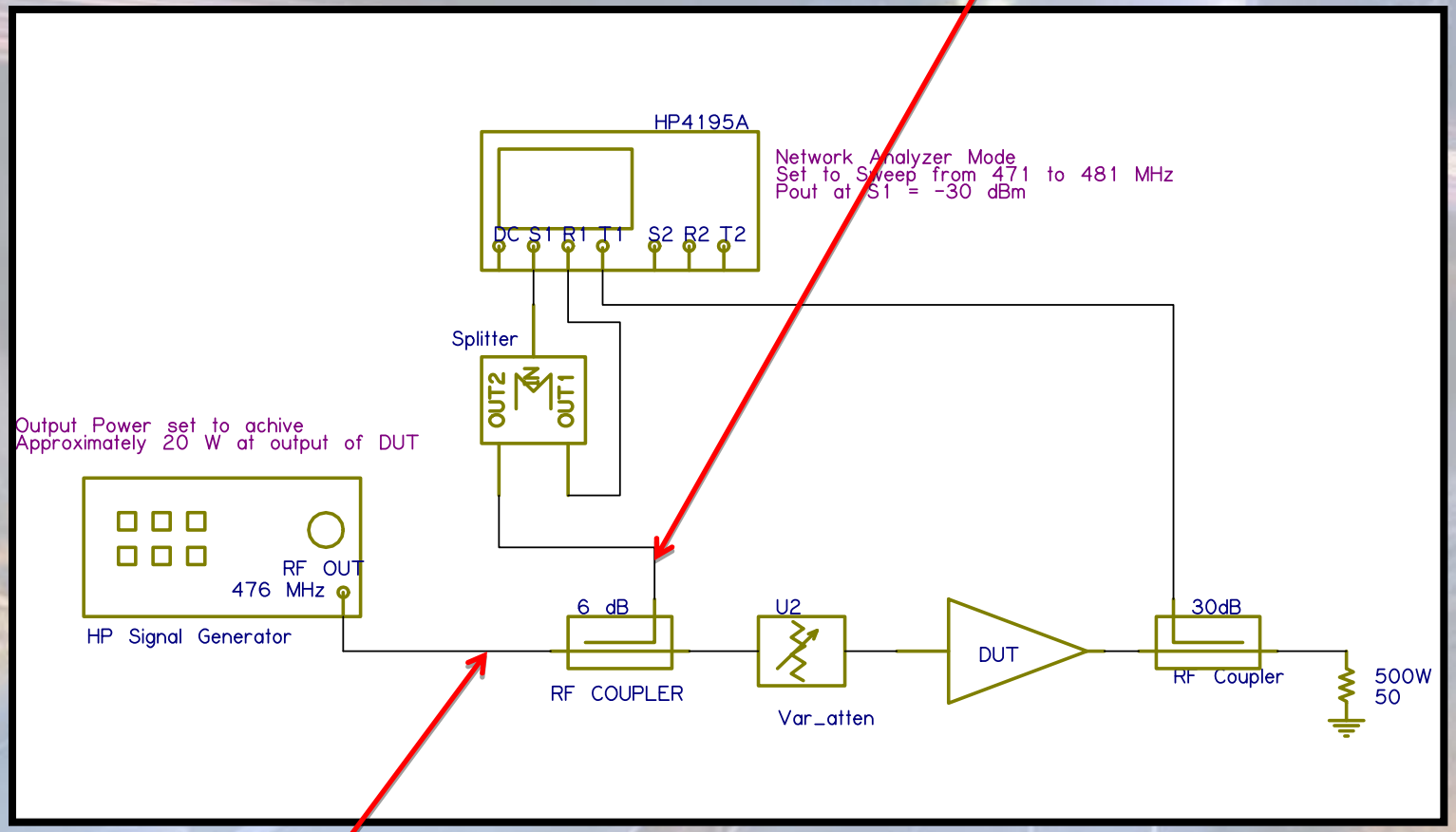

Full Power Carrier

Small/Large Signal

Care must be taken to ensure you don't overload the input of the network (or spectrum) analyzer.

This is usually done by setting a fairly high input attenuation.

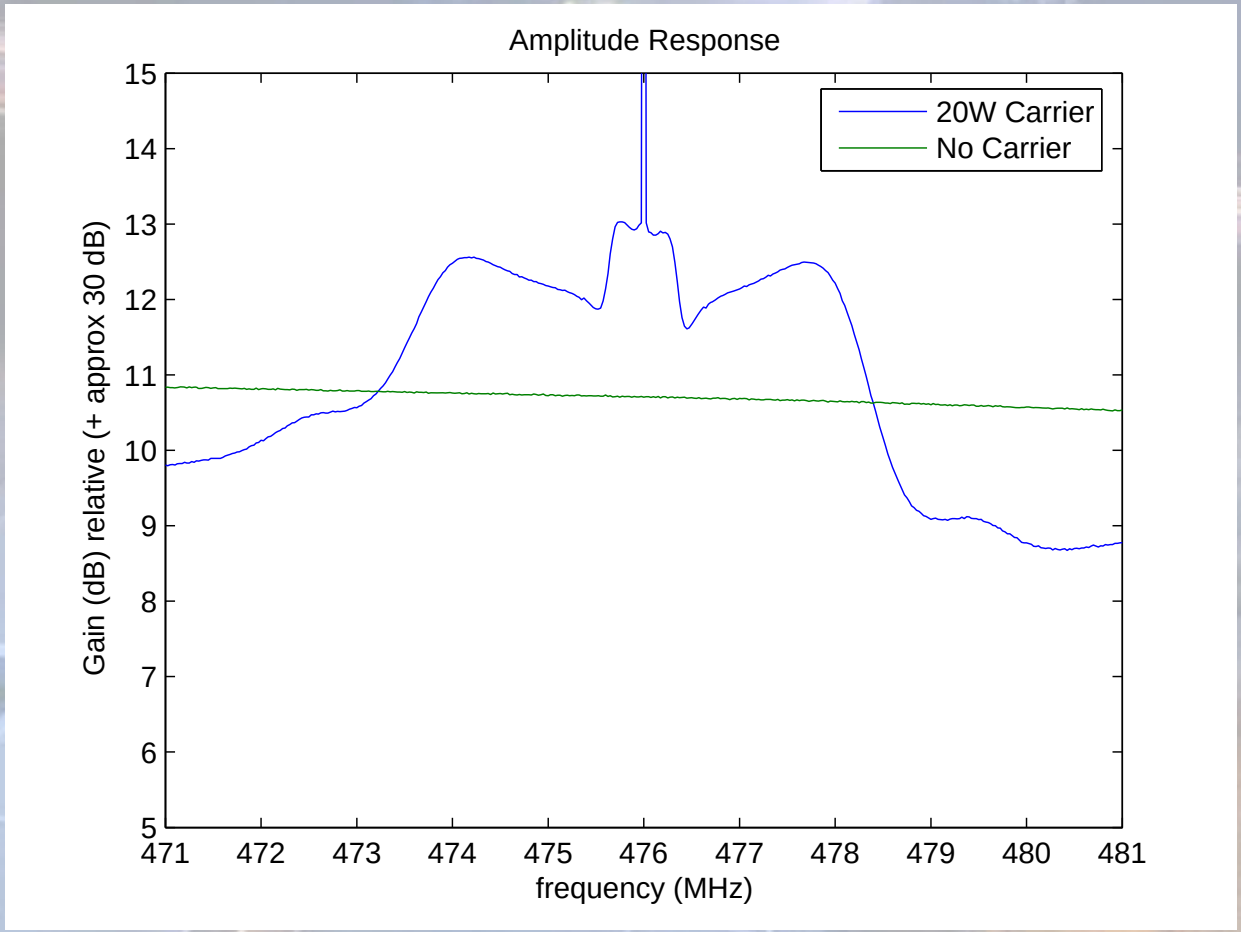

Small/Large Signal

Sweeps of all the pre-amplifiers in the LER in this fashion show similar results to what was obtained with the Klystron included.

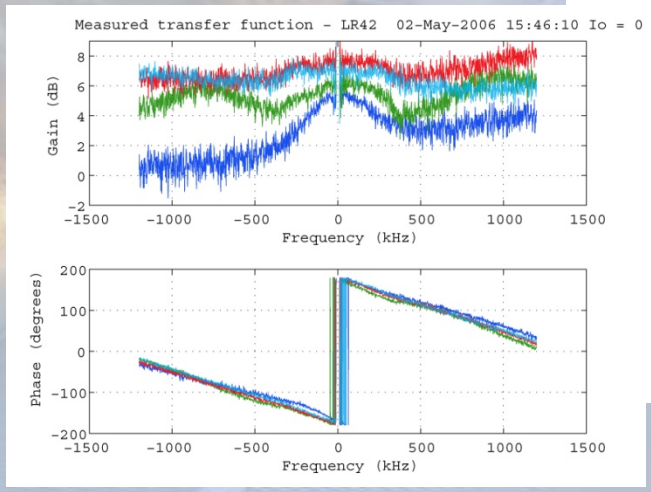

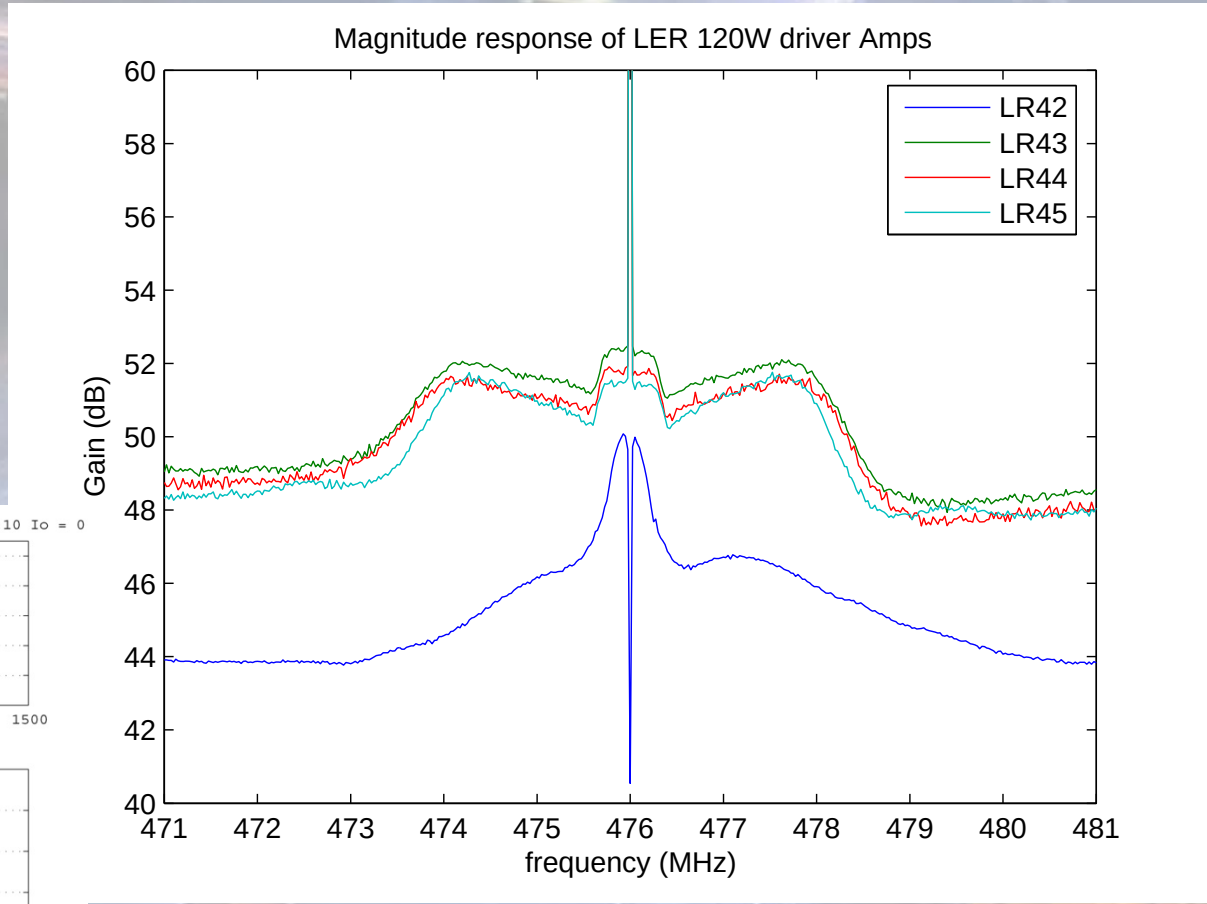

A Model Comes to the Rescue

- Now we finally had all the clues to the puzzle…
  - When Claudio put this response into his model, we started to see the increased growth rates that we expected
  - You heard a whole talk on this subject yesterday so I won't re-iterate here.
- We then set about finding some new amplifiers and developing on other "new" measurement technique.

Small/Large Signal

Non-linear distortion is also a key parameter of these amplifiers. Rather than use two large tones as is typically done in a TOI measurement, we decided to try a new technique similar to our network analyzer technique. Namely, a small signal in the presence of a large signal. We got some surprising results.

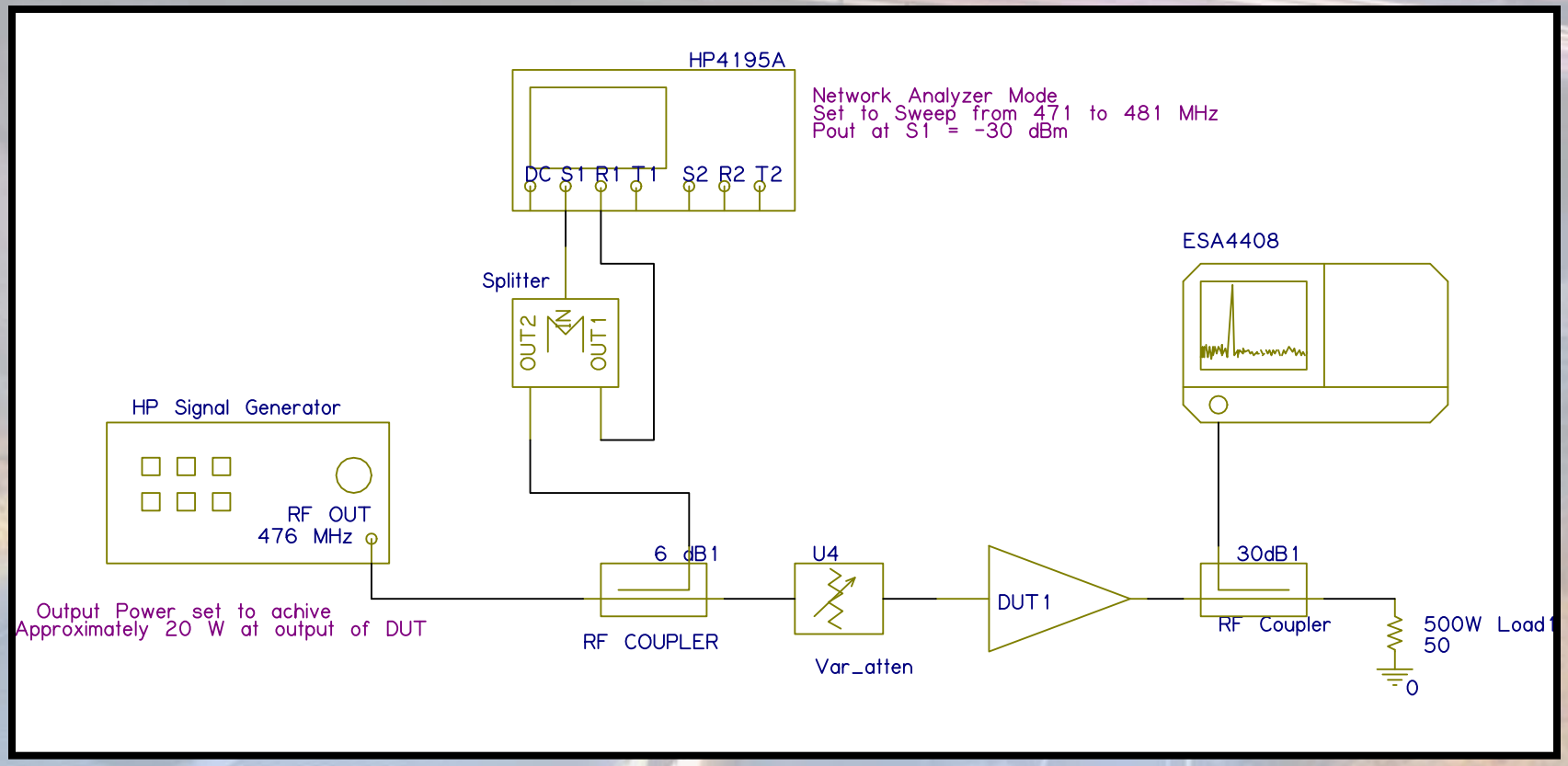

Small/Large Signal

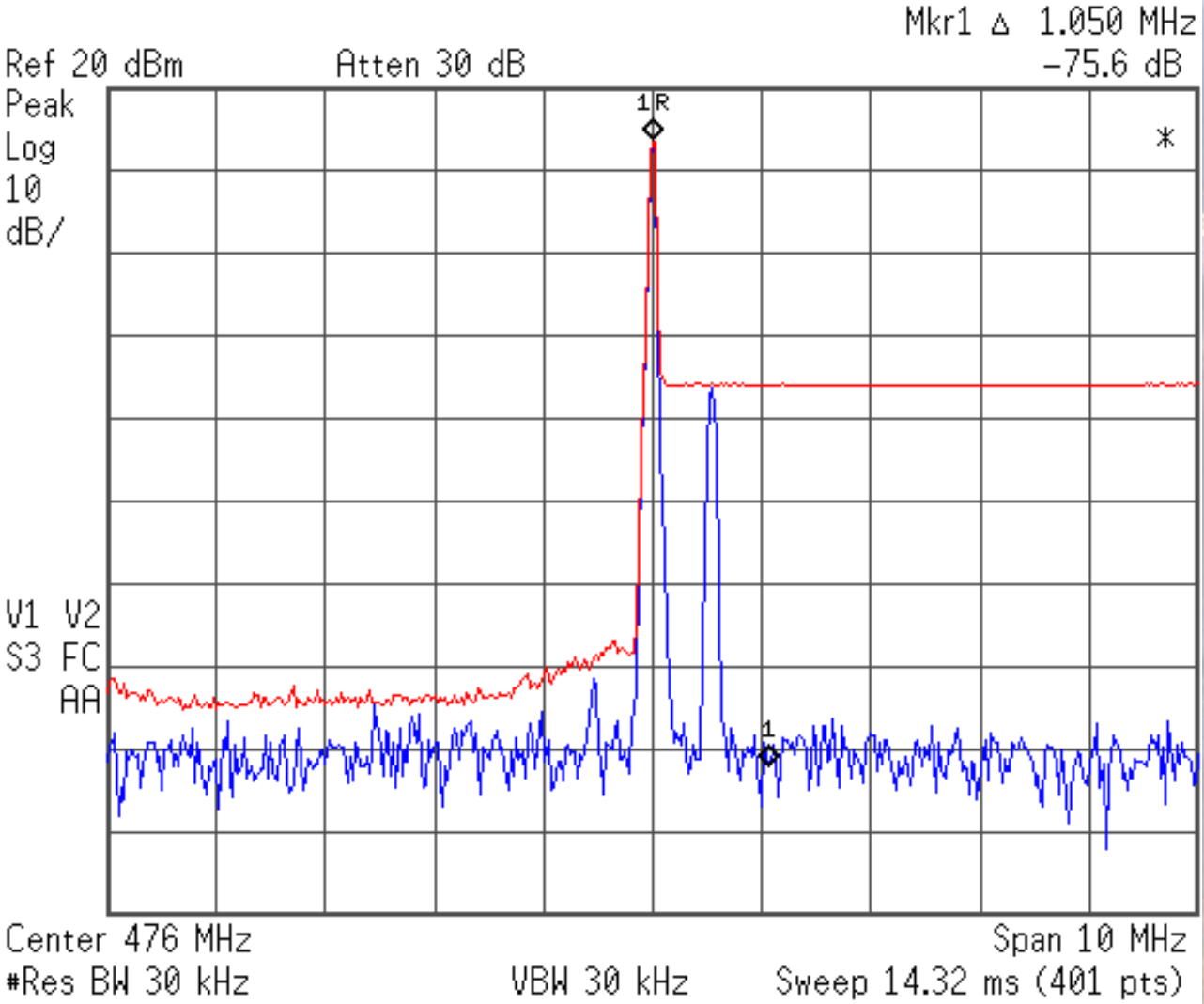

Small/Large Singal

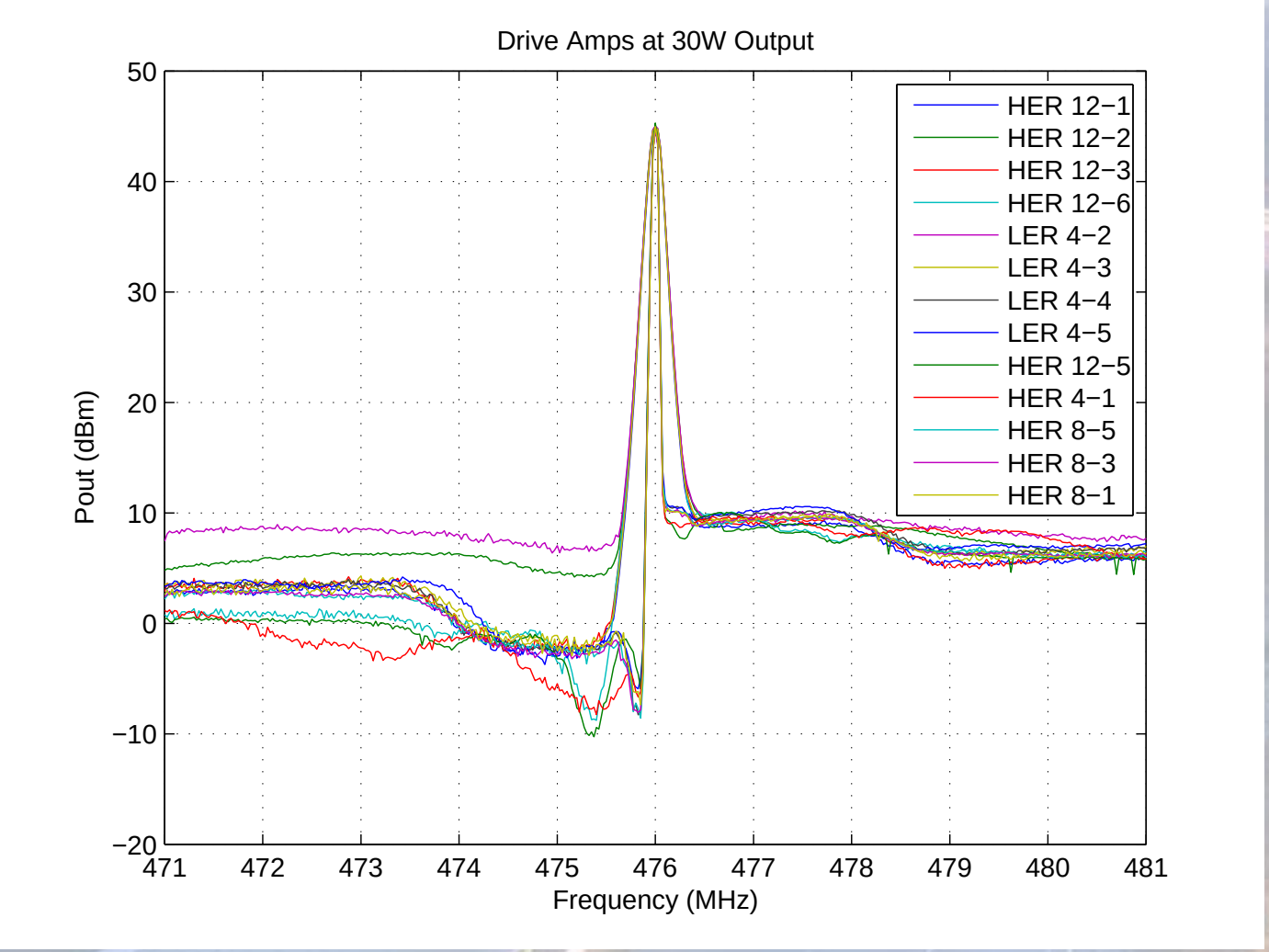

Small/Large Signal

In this case, AmpC was a class A amplifier powered off 220V AC.

Amp B was a class AB amplifier powered of 120V.

We chose amp B based upon “good enough” performance and much less expensive price

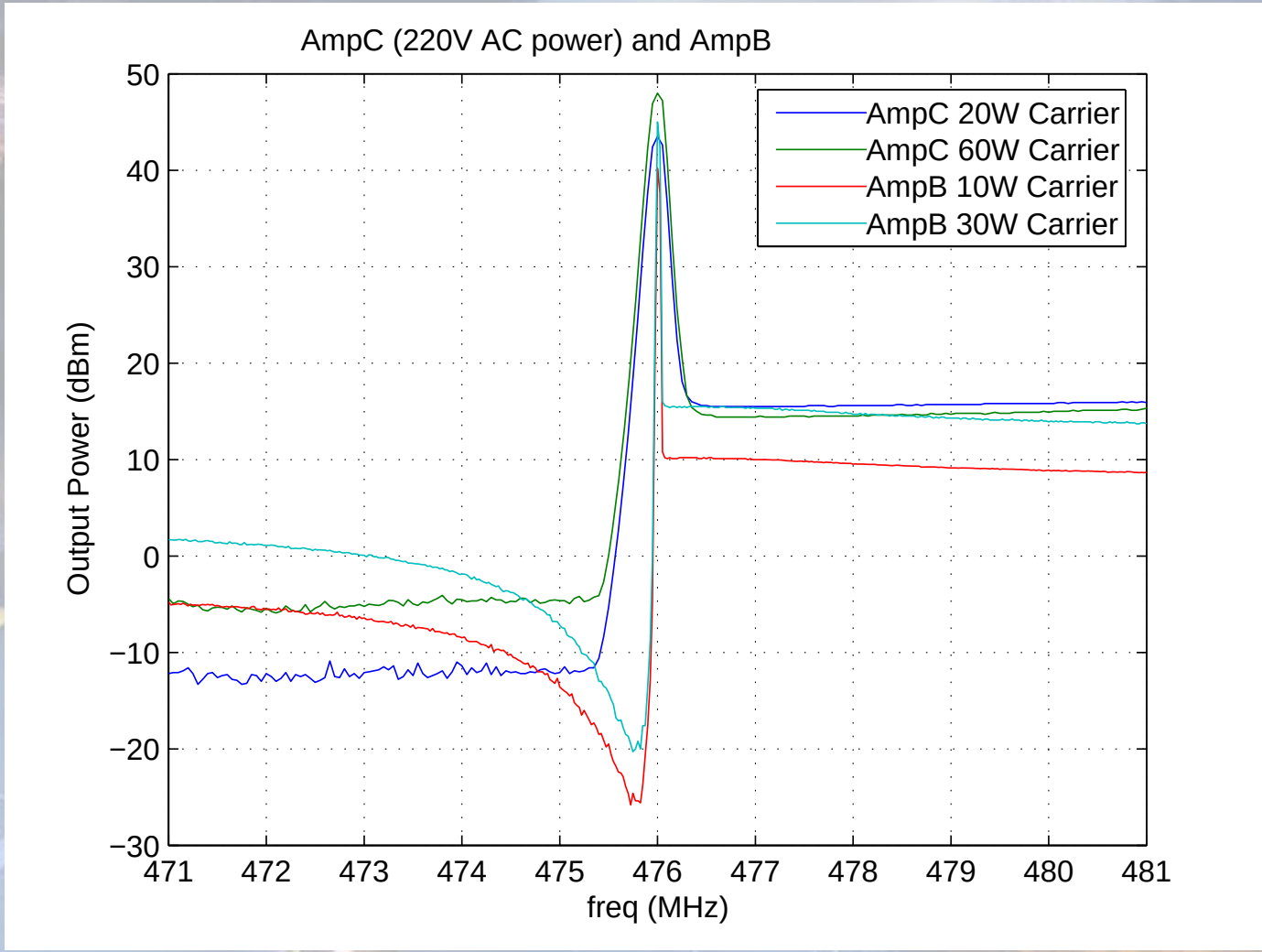

The round about way to a solution

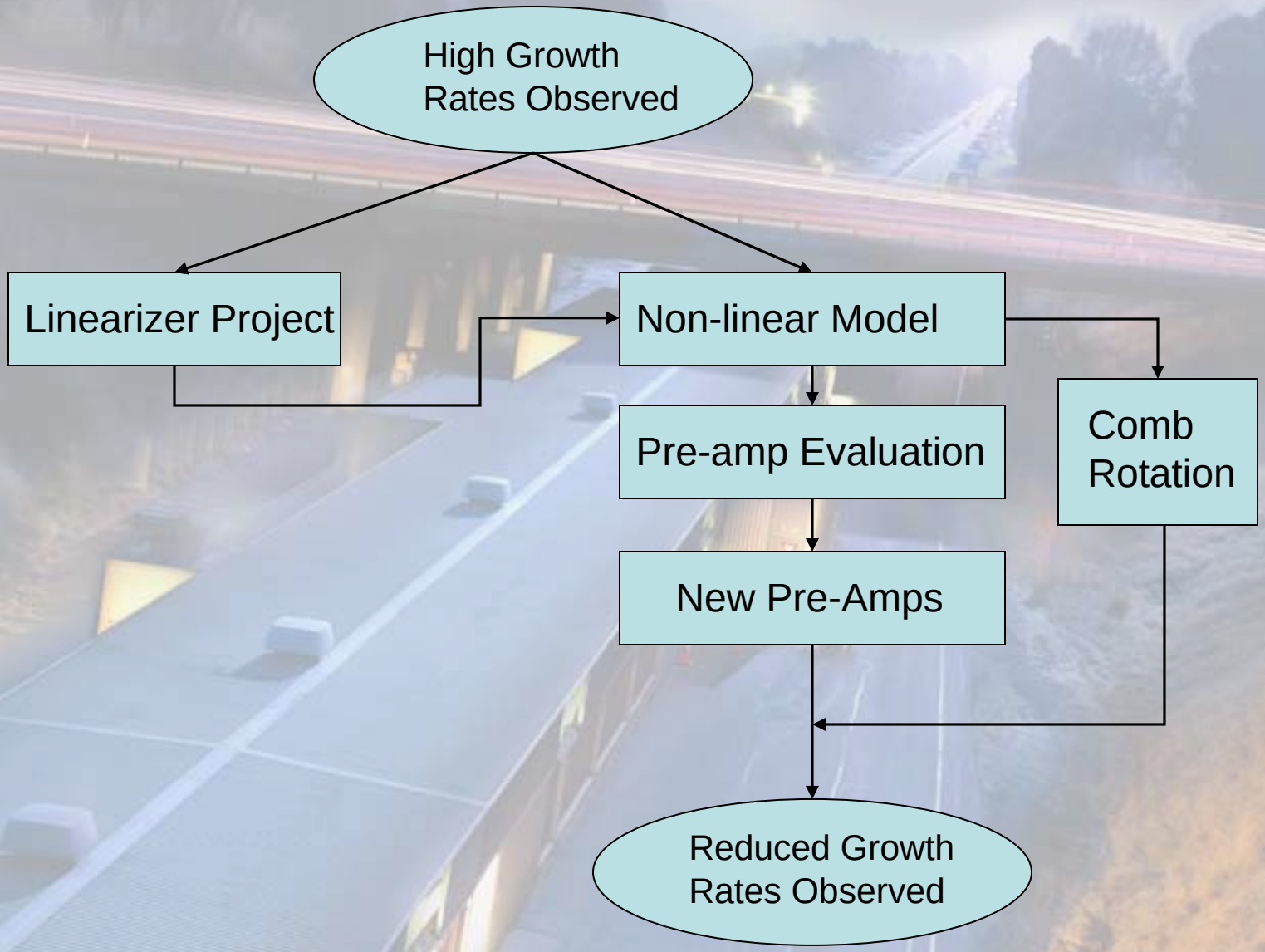

Resolution

- In the End, we bought 17 new amplifiers (1 for each station and 2 spares)
- The effective growth rates have been reduced (See Claudio Rivetta's talk)
- This path led us to various new insights into how to configure the system for maximum performance
  - Comb rotation
  - Gain and phase margin trade off vs. beam stability

Future Directions

- PEP-II will continue to run until October ‘08. Aggressive current increase plans will demand constant vigilance on the part of the RF team
- We are planning on collaboration with the LHC commissioning since the LLRF systems share many commonalities

The PEP-II RF TEAM

High Power RF

Alan Hill, Heinz Schwarz, Vojtech Pack, Al Owens, Ron Akre

Low Level RF

John Fox, Claudio Rivetta, Kirk Bertsche, Mike Browne, John Dusatko, David Brown, Bill Ross

High Voltage

Marc Larrus, Dick Cassel, Paul Bellomo, Serge Ratkovsky

Control Software

Mike Laznovsky

Accelerator Dept

John Seeman, Mike Sullivan, Uli Wienands, William Colocho, Franz-Josef Decke, Alan Fisher, Stan Ecklund, Mat Boyes

Management

Ray Larsen, Sami Tantawi