The LHC Low Level RF

Status and Commissioning Results

Andy Butterworth, Daniel Valuch, Donat Stellfeld, Frederic Dubouchet, Gregoire Hagmann, Iouri Kojevnikov, Joao Bento, John Molendijk, Jorge Sanchez Quesada, Jose Noirjean, Maria Elena Angoletta, Philippe Baudrenghien, Philippe Perrin, Pierre Maesen, Ragnar Olsen, Serge Kouzue, Urs Wehrle,Vittorio Rossi

CERN AB-RF-FB and AB-RF-CS

Reported by P. Baudrenghien

Outline

- Overview of the LHC RF
- Measured Performances of the Cavity Controller
  - The RF Feedback
    - Cavity field phase and amplitude noise. Lifetime (in hours)
    - Effective Cavity impedance. Instability threshold (in Amps)
  - The Klystron Polar Loop
- Development of the Beam Control
- Status of Installation and Calendar

1. Overview of the LHC RF

Cavities

- Two independent rings
- 8 RF cavities per ring at 400.790 MHz [1]:
  - Super Conducting Standing Wave Cavities, single-cell, R/Q = 45 ohms, 6 MV/m nominal
  - Movable Main Coupler (20000 < Q_L < 180000)
    - 1 MV /cavity at injection with Q_L = 20000
    - 2 MV/cavity during physics with Q_L = 60000
  - Mechanical Tuner range = 100 kHz

Driver+Klystron CW

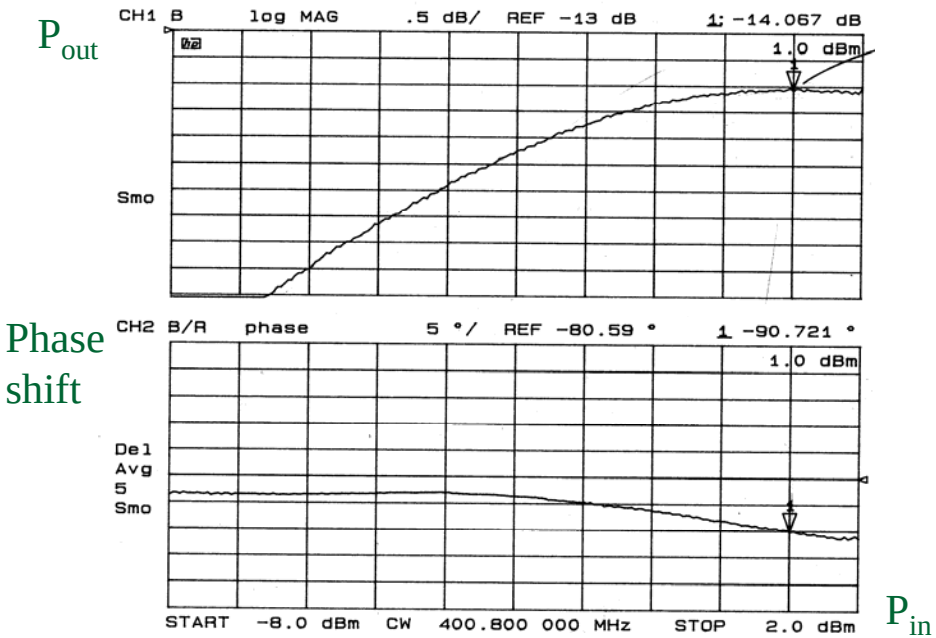

Klystron power sweep CW @ 400.8 MHz

- 1 klystron per cavity
  - 330 kW max (58 kV, 8.4 A)
  - 130 ns group delay (~ 10 MHz BW)
  - CW gain 39 dB @ 200 kW, 36 dB @ 300 kW
  - In operation < 200 kW CW

Driver + Klystron Frequency Sweep

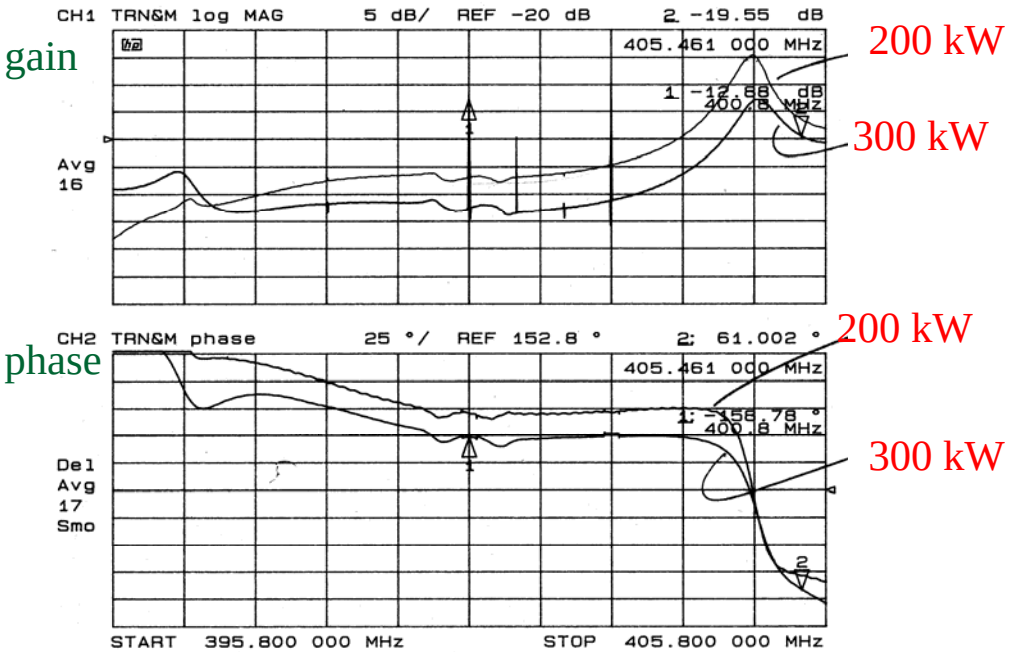

Klystron freq response

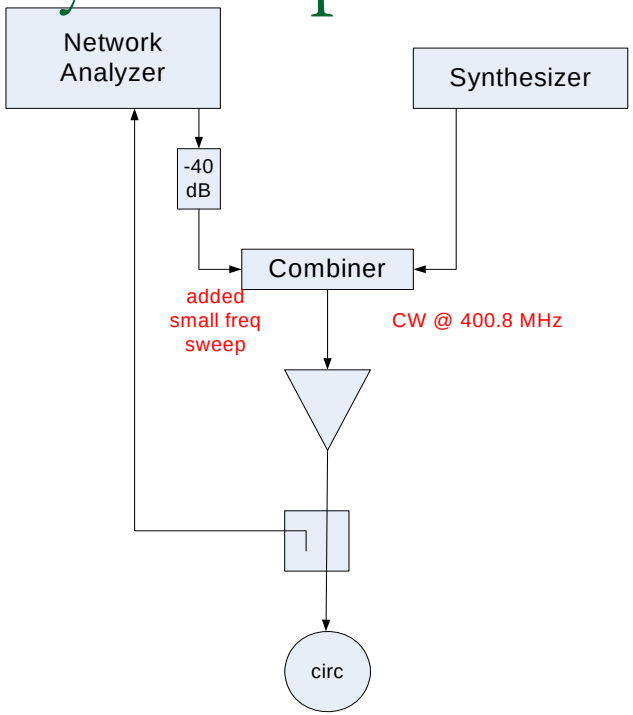

Freq response measurement set-up

- Small signal frequency response with CW power 200 kW and 300 kW
- Gain drops by ~5 dB
- Phase shift ~ 25 degrees @ 400 MHz
- Strong (20 dB) resonance around 404.8 MHz (bunching cavity)
- Acceptable for inclusion in a feedback loop…

Layout

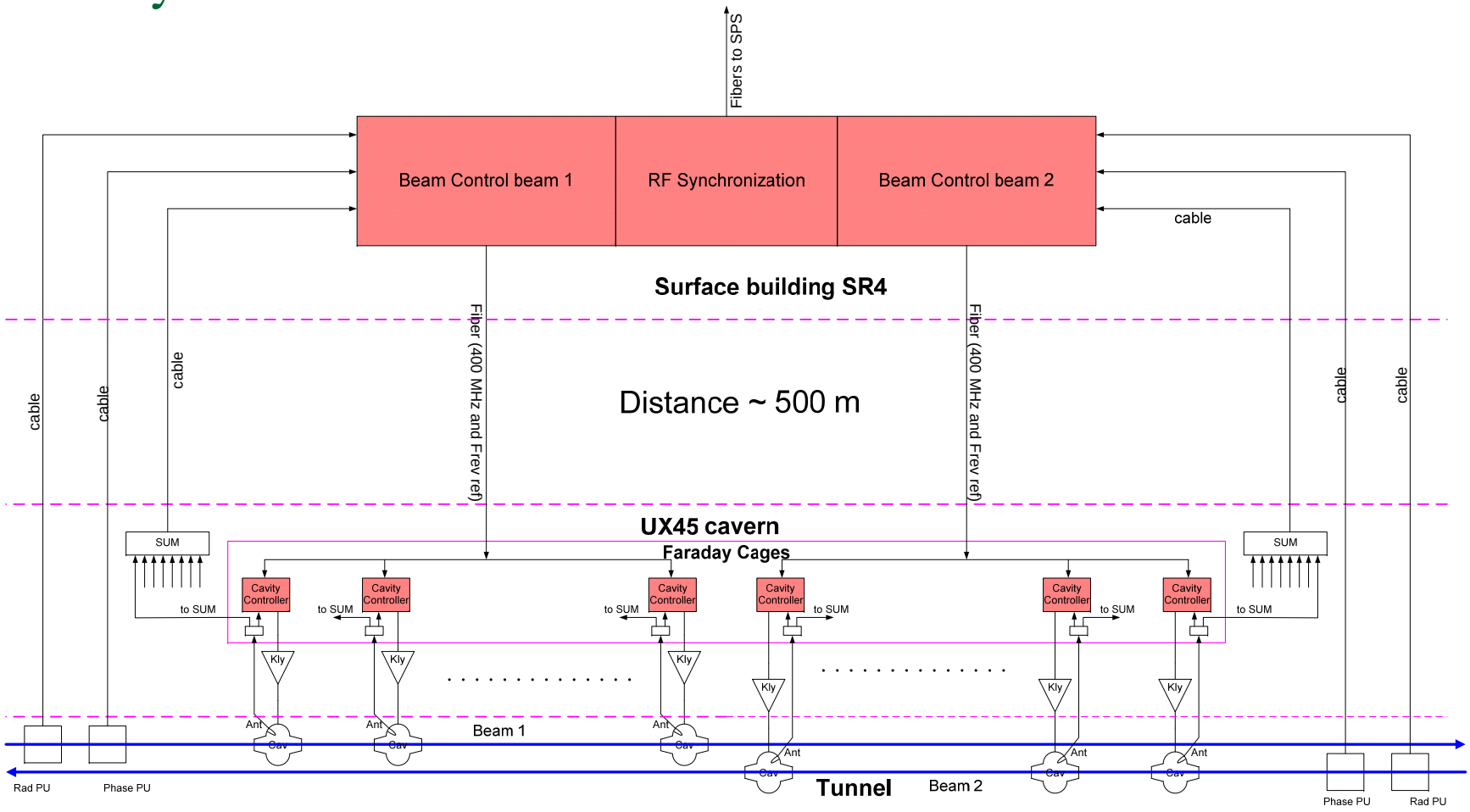
Fibers to SPS
Beam Control beam 1
RF Synchronization
Beam Control beam 2
cable
Surface building SR4
Fiber (400 MHz and Frev ref)
Fiber (400 MHz and Frev ref)
Distance ~ 500 m
cable
cable
cable
cable
cable
UX45 cavern
Faraday Cages
SUM
SUM
Cavity Controller
to SUM
Kly
Ant
Cav
Beam 1
Tunnel
Beam 2
Rad PU
Phase PU
Phase PU
Rad PU

2. Commissioning the Cavity Controller

Cavity Controller Loops [2]

- RF Feedback Loop: Reduces the cavity impedance at the fundamental (by 20 linear for Q=20000, by 180 at Q = 180000). Precision of RF voltage, transient beam loading and longitudinal stability
- Klystron Polar Loop: Compensates for the klystron gain/phase changes. (HT drifts and ripples).
- 1-T Feedback: Adds factor 10 reduction on the revolution frequency side-bands. (Transient beam loading + longitudinal stability)
- Tuner Loop: Minimizes klystron current. (Half detuning)
- Set Point: Customizes the voltage for each bunch. (Each bunch slightly displaced with respect to a constant spacing [3])

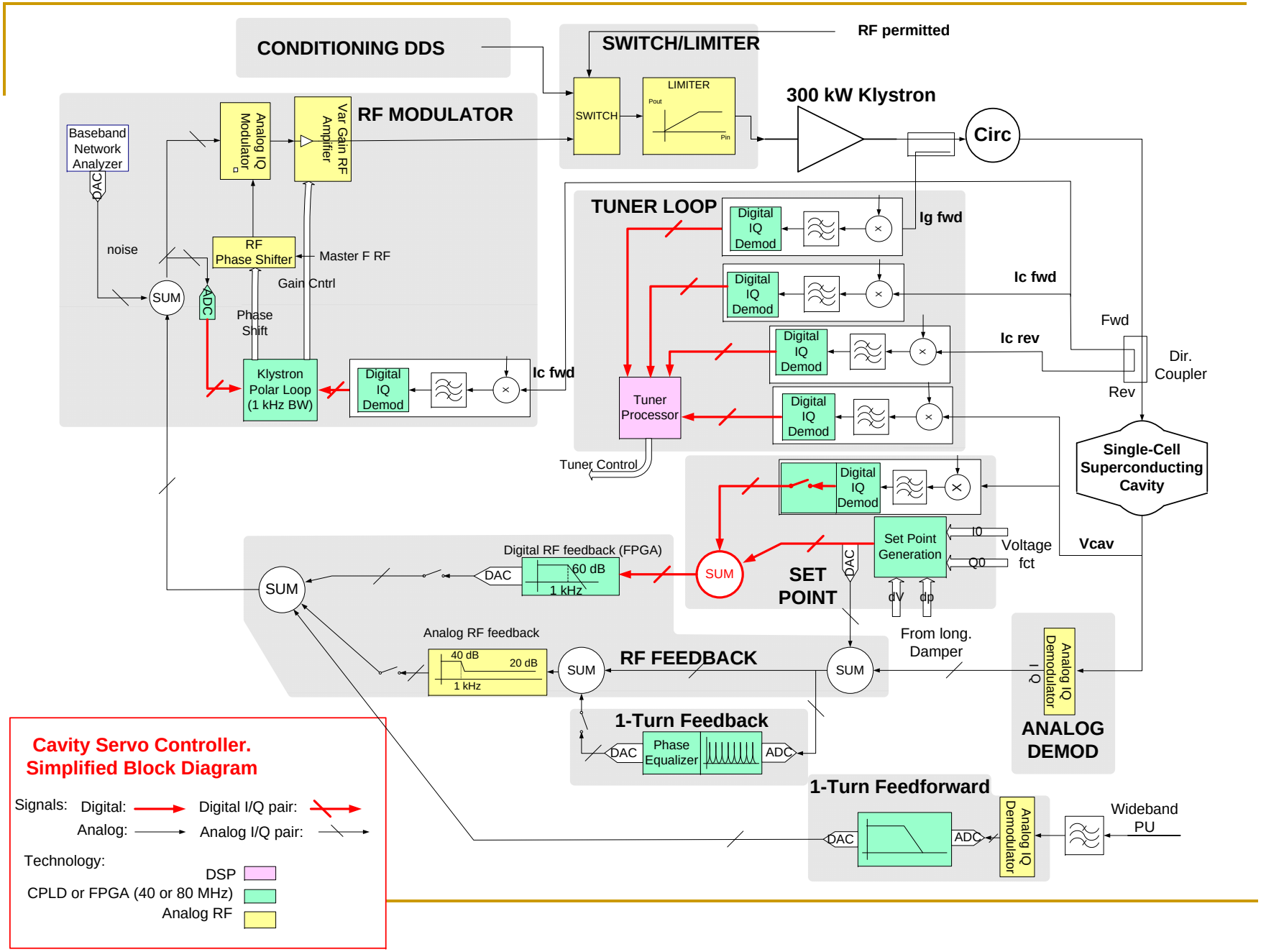
CONDITIONING DDS
SWITCH/LIMITER
RF permitted
SWITCH
LIMITER
Pout
Pin
300 kW Klystron
Circ
RF MODULATOR
Baseband Network Analyzer
DAC
Analog IQ Modulator
Var Gain RF Amplifier
noise
RF Phase Shifter
Master F RF
Gain Cntrl
SUM
ADC
Phase Shift
Klystron Polar Loop (1 kHz BW)
Digital IQ Demod
Ic fwd
TUNER LOOP
Ig fwd
Ic fwd
Ic rev
Fwd
Rev
Dir. Coupler
Tuner Processor
Tuner Control
Single-Cell Superconducting Cavity
Vcav
Voltage fct
Set Point Generation
I0
Q0
dV
dp
SET POINT
Digital RF feedback (FPGA)
60 dB
1 kHz
Analog RF feedback
40 dB
20 dB
RF FEEDBACK
From long. Damper
Analog IQ Demodulator
I Q
ANALOG DEMOD
1-Turn Feedback
Phase Equalizer
1-Turn Feedforward
Wideband PU
Cavity Servo Controller. Simplified Block Diagram
Signals: Digital: Digital I/Q pair:
Analog: Analog I/Q pair:
Technology:
DSP
CPLD or FPGA (40 or 80 MHz)
Analog RF

2.1. Performances of the RF Feedback

RF Feedback Open Loop

- 20 dB gain increase at lower frequencies
- Optimal Open-Loop gain = 20 (Q=20000), 120 linear (Q=180000)
- Notches at +-4.3 MHz offset. Compensates for the klystron bunching cavity resonance.
- 20 dB (10 linear) gain increase in 4 kHz band around centre frequency for precision

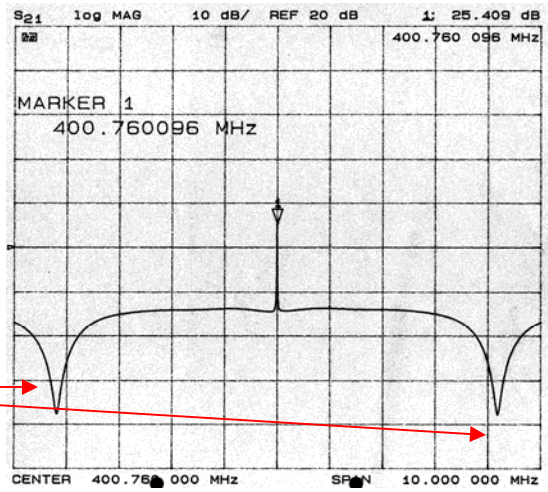

Full Fdbk OL response 10 MHz band

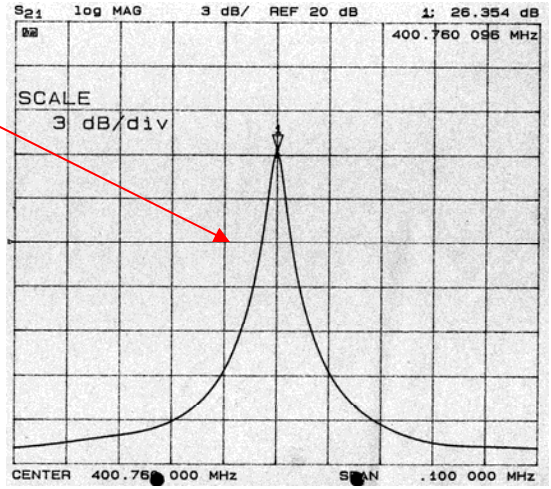

Dig Fdbk OL response 10 kHz band

Noise reduction with RF feedback

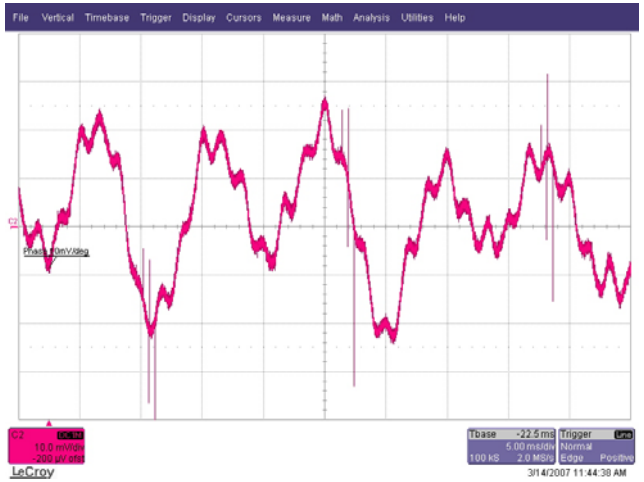

Phase
Vcav/Ref

Open Loop 10 mV/div -> 5 dg pk-pk, 5 ms/div (File PhaseMeasOpen 14 March 2007)

Closed Loop 2 mV/div -> 0.1 dg pk-pk, 5 ms/div (PhaseMeasAtt_0A 14 March 2007)

- Phase noise Vcav vs ref.
- SM18 test stand, March 2007
- Calibration: 10 mV/dg @ 400 MHz
- Q=60000, 1 MVacc, 35 kW

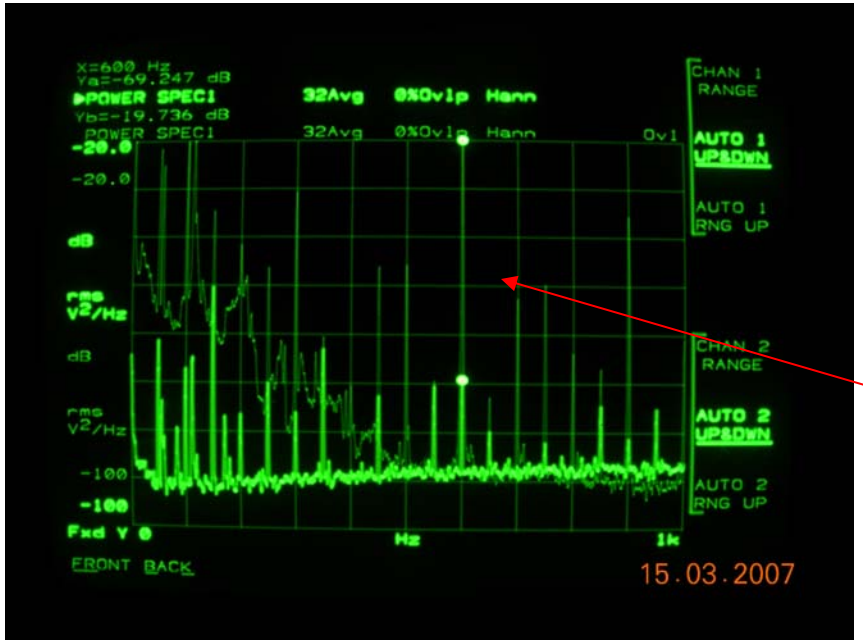

Open Loop vs Close Loop. 50 dB reduction @ 600 Hz
(File PhaseNoise3 15 March 2007)

- Power Spectral Density of cavity phase noise (Vcav vs Ref) with and without RF feedback
- ZLW1 mixer and Spectrum Analyzer
- 300 mV/dg @ 400 MHz
- 50 dB reduction of 600 Hz line

Expected lifetime (Joachim Tuckmantel [4])

- **RF feedback alone** (further improvement with Klystron Polar Loop)
  - Coast at 7 TeV/c with 16 MV, 2.5 eVs (f_{s0}=23 Hz).
    - **Blow-up rate below the 24 h synchrotron radiation damping time.**
    - 1 ps rms white noise just compensates synchrotron radiation damping. We measure 2.4 10^{-2} ps rms from DC to f_{rev} =11250 Hz .
  - Crossing the 50 Hz f_s during ramp: during ~ 1 min, 50 Hz falls inside fs band. Dangerous
    - **0.2 % rms emittance increase**
    - If noise is increased by 10 linear, we get 27 % emittance increase with bunch centre reduced in population
  - Coast at 450 GeV/c with 8 MV, 0.7 eVs (f_{s0}=63 Hz).
    - 50 Hz lines multiples do not hit the populated synchrotron frequency band -> no significant effect observed
    - 1 ps rms white noise now gives 0.1 % loss after 1 hour.

Step response

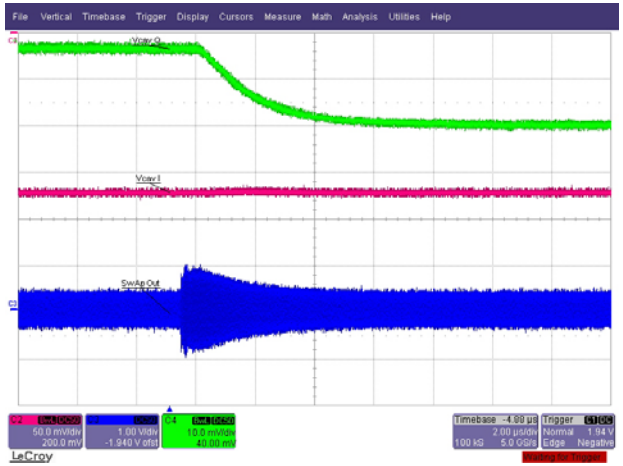

Vcav Q

Vcav I

Ig

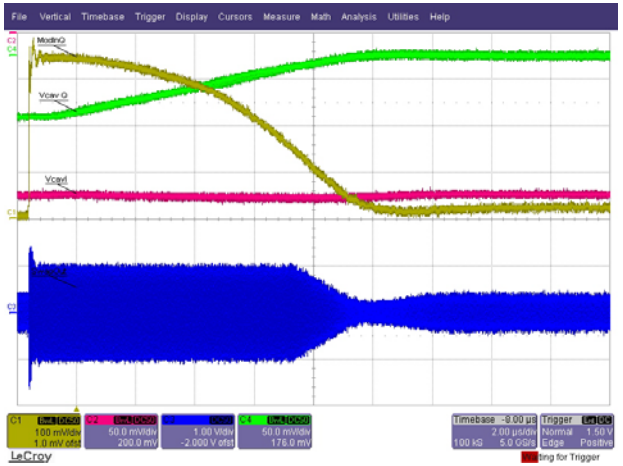

100 kV in 3 μs, 2 μs per div
(File VcavStep100kV_Q 14 March 2007)

400 kV in 10 μs, 2 μs per div
(File StepQ6 15 March 2007)

- 1 MV in I, step in Q
- Q=60000, 1 MV asks for ~ 40 kW
- Observe Vcav I and Q plus klystron drive @ 400 MHz
- Linear regime: 70 kV in 1 μs

Small Signal Freq Resp (Fdbk close)

Gain

Phase

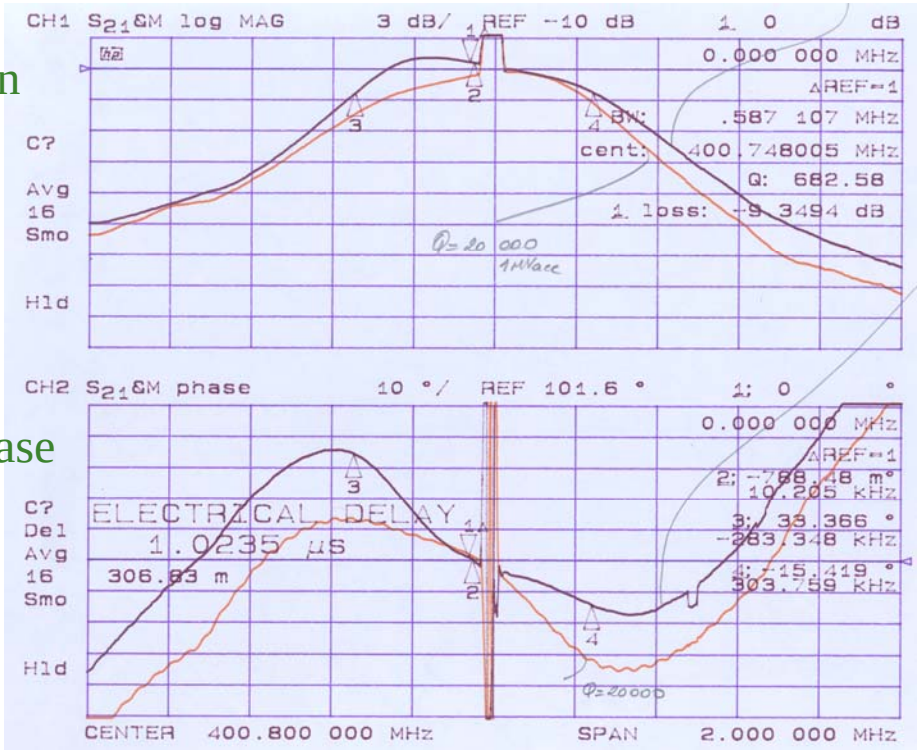

Q=20000

Q=180000

Centre 400.8 MHz, 2 MHz span

- Red: 1 MVacc, Q=20000, G=20
- Blue: 2 MVacc, Q=180000, G=120
- **Close Loop Q = 700**, 600 kHz -3 dB Bw, independent of cavity Q

Longitudinal Instability threshold

- With RF feedback alone we get 45 kohm/cavity. This gives a stable current limit [7] of
  - 1/6 th nominal (0.56 A DC or 1.1 10^{11} per bunch) for 0.7 eVs up to 7 TeV
  - 1/3 rd nominal for 1 eVs up to 7 TeV
  - 2 times nominal for optimal blow-up 0.6-2.5 eVs during ramp. In optimal blow-up the emittance should increase proportional to the square root of the energy: From 0.63 eVs at 450 GeV to 2.5 eVs at 7 TeV. Controlled emittance blow-up must be done with phase and amplitude noise injected in the 400 MHz cavities. To be optimized …
- 1-T feedback adds a further 20 dB reduction in ~ 1 MHz, 2-sided BW

See poster by V. Rossi

Limiter on transient: Switch&Protect module

Developed by T. Rohlev

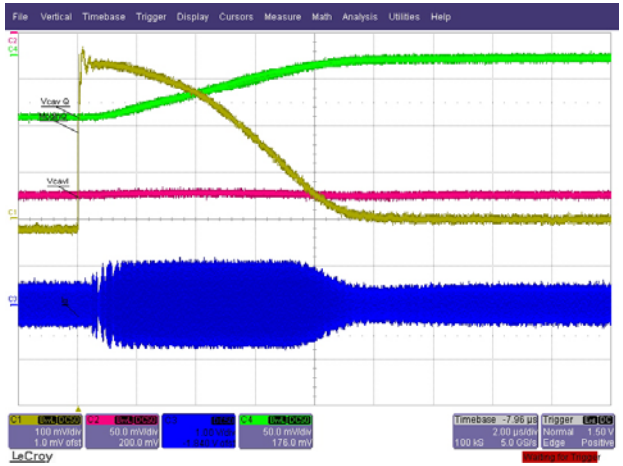

Vcav Q

Vcav I

Mod in Q

Ig

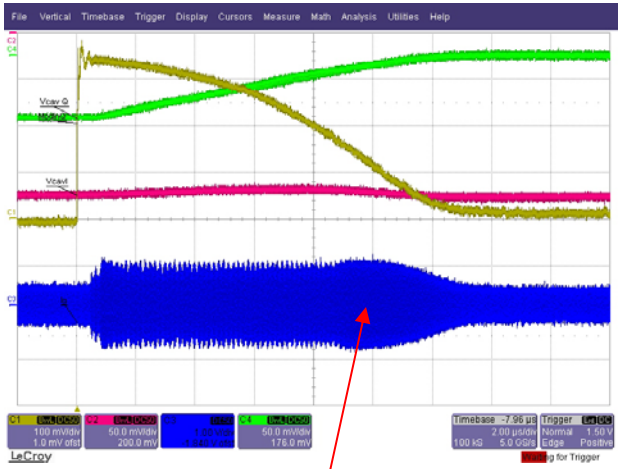

Limiter ON
(File StepQ9 15 March 2007)

Limiter disabled
(File StepQ10 15 March 2007)

- 1 MV in I, step in 400 kV in Q
- Q=60000, 1 MV asks for ~ 40 kW
- Observe Vcav I and Q, Mod in Q and klystron output
- Without limiter it takes more time to fill cavity

2.2. Performances of the Klystron Polar Loop

Adjusting the Klystron loop gains

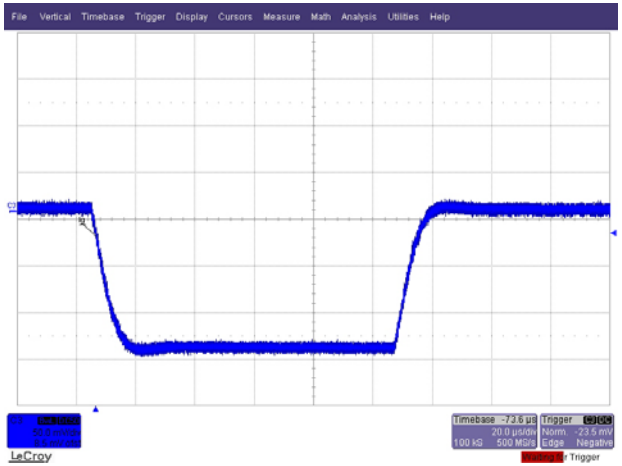

Gain Cntrl

Phase Cntrl

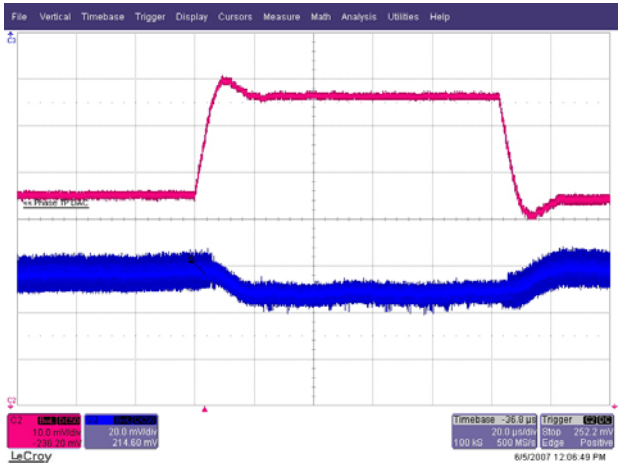

Phase control: Response to a 90 degrees phase shift. 20 μs /div

Gain control: Response to a step in *klystron gain*. Bottom trace = phase control. 20 μs /div

- Gain and phase loops react in ~ 10 μs. (Reminder: RF fdbk time constant ~ 1 μs, Tuner loop time constant ~1 s).
- Klystron Polar loop is automatically switched OFF if Switch&Protect module limits the drive.

Static behavior (phase)

- Phase shift @ 400 MHz function of klystron HV
- Klystron Polar Loop open. Theory: 8.4 degree @ 400.8 MHz per percent HV drift @ 50 kV

  52.9 kV -> 34 degree @ 400.8 MHz

  51.9 kV -> 17.4 degree @ 400.8 MHz

  50.9 kV -> 0 degree @ 400.8 MHz

  49.8 kV -> -36.3 degree @ 400.8 MHz

  47.8 kV -> -74.4 degree @ 400.8 MHz
- Klystron Polar Loop close

  52.9 kV -> -0.1 degree @ 400.8 MHz

  51.9 kV -> 0.0 degree @ 400.8 MHz

  49.9 kV -> 0.0 degree @ 400.8 MHz

  47.9 kV -> 0.0 degree @ 400.8 MHz

Static behavior (gain)

- Keep modulator in constant, observe klystron output power @ 400 MHz function of klystron HV and Icath.

	Loop open	Loop closed
Icath=6.4 A		
HV	**Pg**	**Pg**
51.5 kV	123 kW	109 kW
46.4 kV	117 kW	109 kW
41.3 kV	102 kW	109 kW
HV=50 kV		
I cath	**Pg**	**Pg**
4.4 A	44 kW	109 kW
5.1 A	67 kW	109 kW
5.8 A	94 kW	109 kW
6.3 A	126 kW	109 kW

Compensation for HV ripples (phase)

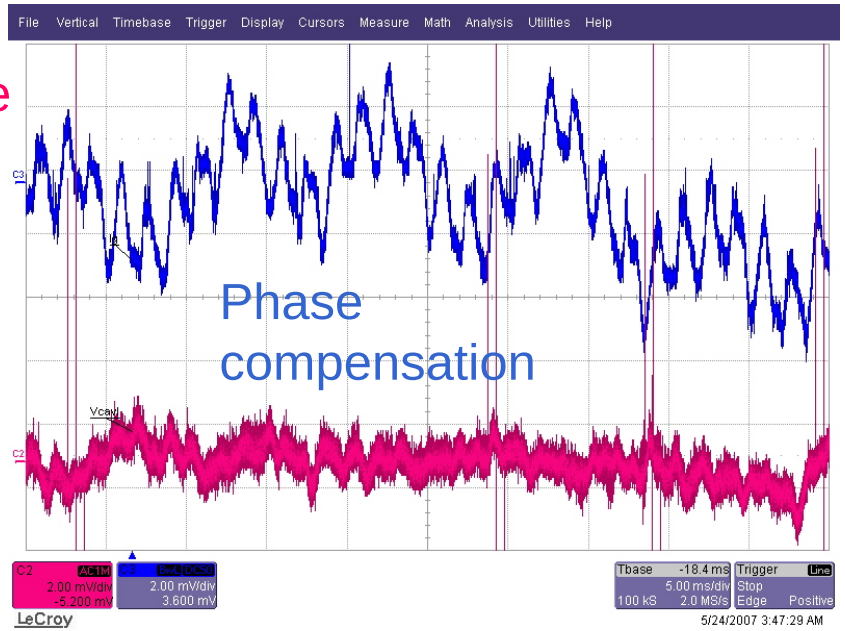

Loop open. Phase noise Ig-Ref: Mainly 100 Hz and 600 Hz due to HV ripples. Calib 10 mV/dg @ 400 MHz. ~3.5 dg pkpk (10 mV/div, 5 ms /div)

Loop closed. Red trace = phase noise Ig-Ref. Calib 10 mV/dg @ 400 MHz. ~0.2 dg pkpk (2 mV/div, 5 ms /div). Blue trace = phase compensation.

- Measured with HP8508 Vector voltmeter
- Calibration: 10 mV/dg @ 400 MHz

Spectrum of klystron output phase noise

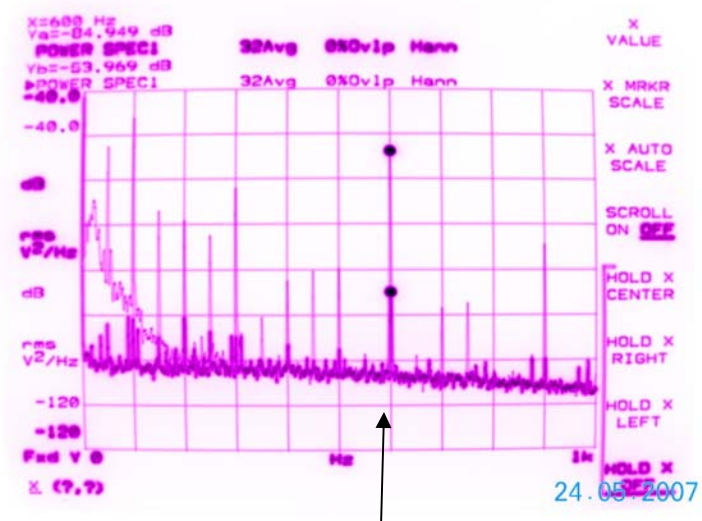

PSD in dBV^2/Hz, 10 dB/div, DC to 1 kHz. Phase noise Ig-Ref: Bright trace = klystron loop On, background trace = loop off. Measured reduction 30 dB @ 600 Hz

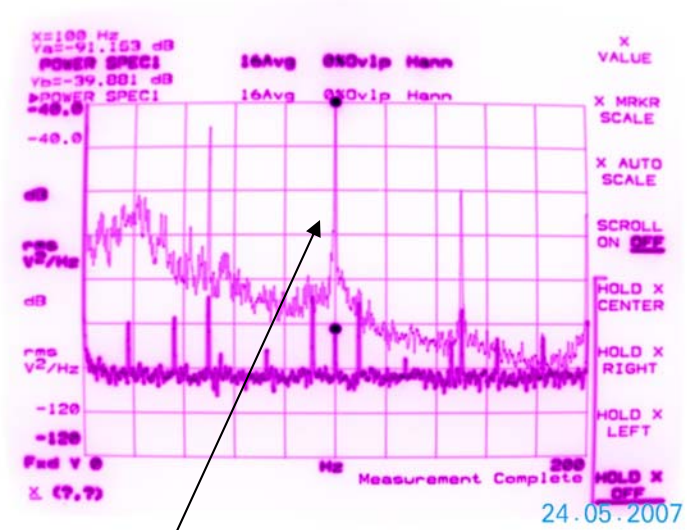

PSD in dBV^2/Hz, 10 dB/div, DC to 200 Hz. Phase noise Ig-Ref: Bright trace= klystron loop On, background trace = loop off. Measured reduction 50 dB @ 100 Hz

- Measured with HP8508 Vector voltmeter plus HP3562A spectrum analyzer
- Calibration: 10 mV/dg @ 400 MHz
- Observe 30 dB reduction @ 600 Hz and 50 dB reduction @ 100 Hz

Compensation for HV ripples (gain)

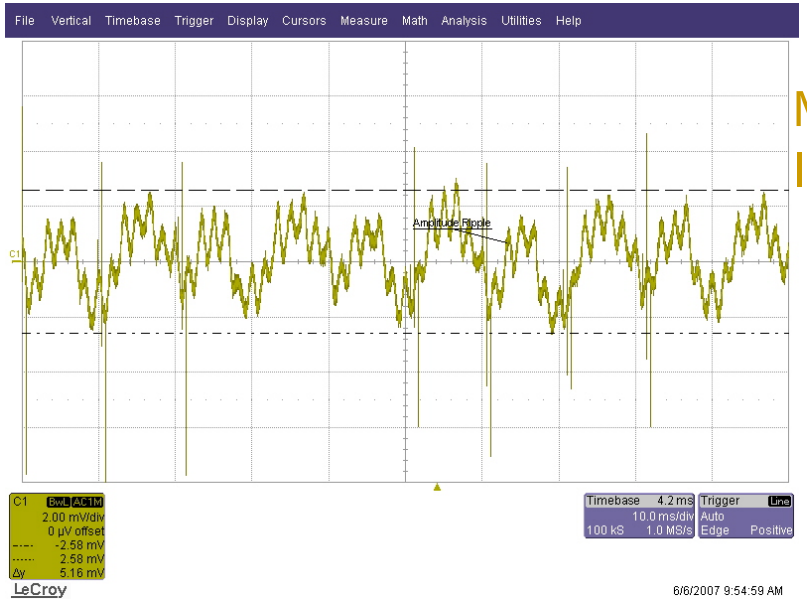

Modulus Ig

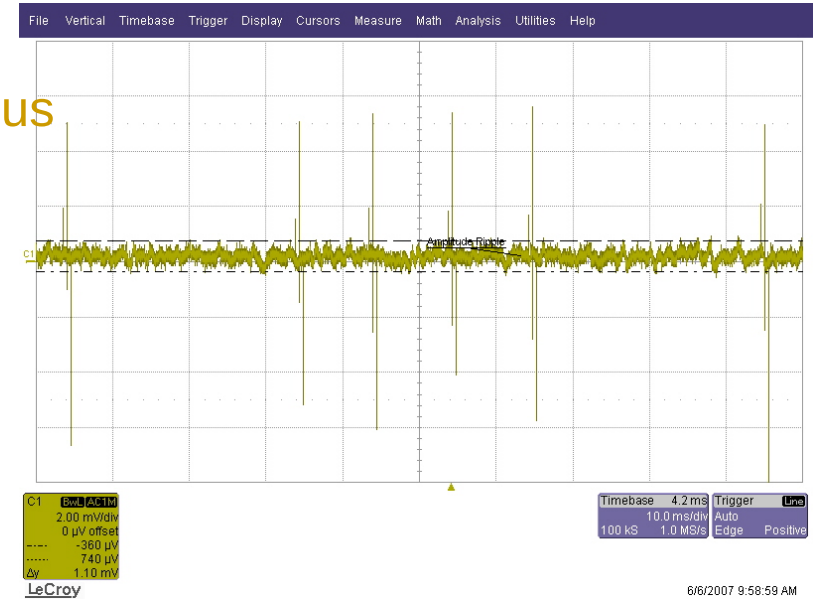

Loop open. Amplitude noise Ig: 42 Vpkpk ripple on a 3 kV klystron output (50 ohm). (2 mV/div, 10 ms /div)

Loop closed. Amplitude noise Ig. (2 mV/div, 10 ms /div)

- Measured with HP8508 Vector voltmeter

Spectrum of klystron output amplitude noise

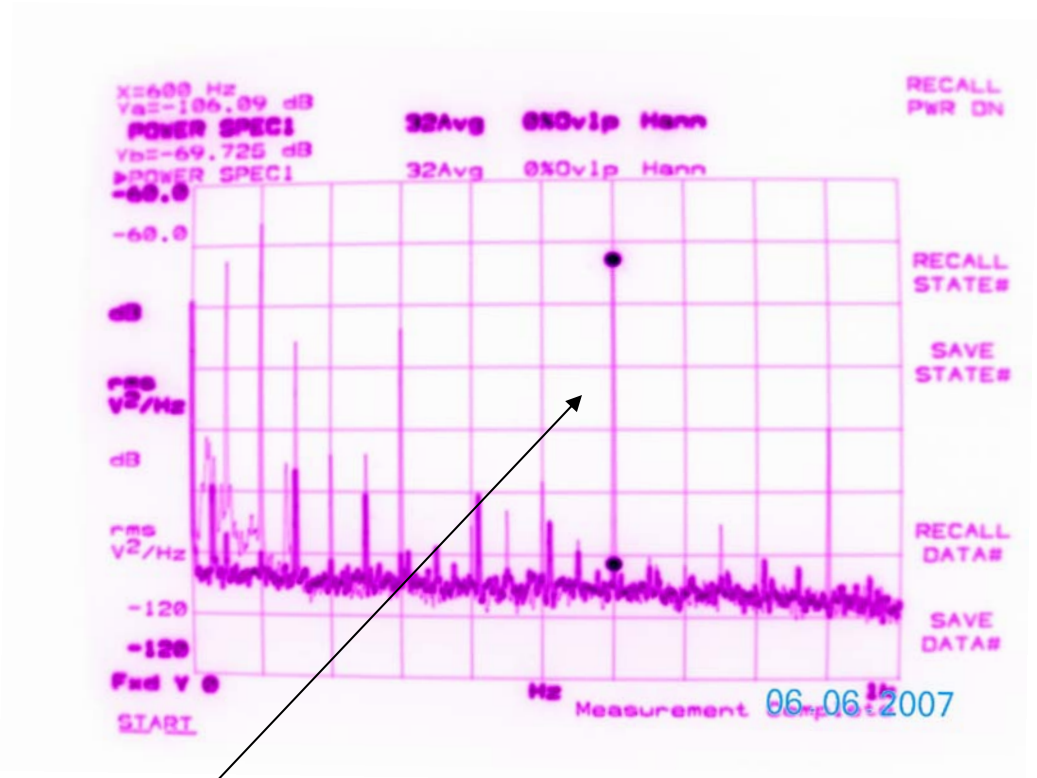

PSD in dBV^2/Hz, 7 dB/div, DC to 1 kHz. Amplitude noise Ig-Ref: Bright trace= klystron loop On, background trace = loop off. Measured reduction 35 dB @ 600 Hz

- Measured with HP8508 Vector voltmeter plus HP3562A spectrum analyzer
- Observe 35 dB reduction at 600 Hz

See poster by J. Molendijk & P. Baudrenghien

2.3. The 1-T Feedback

See poster by V. Rossi

3. The Beam Control

Beam Control

- Slow phase, radial and synchro loops
- One system per ring
- Located on the surface (SR4)
- Generates the Master RF @ 400.8 MHz of fixed amplitude whose phase is adjusted continuously
- Update rate at the 11 kHz revolution frequency

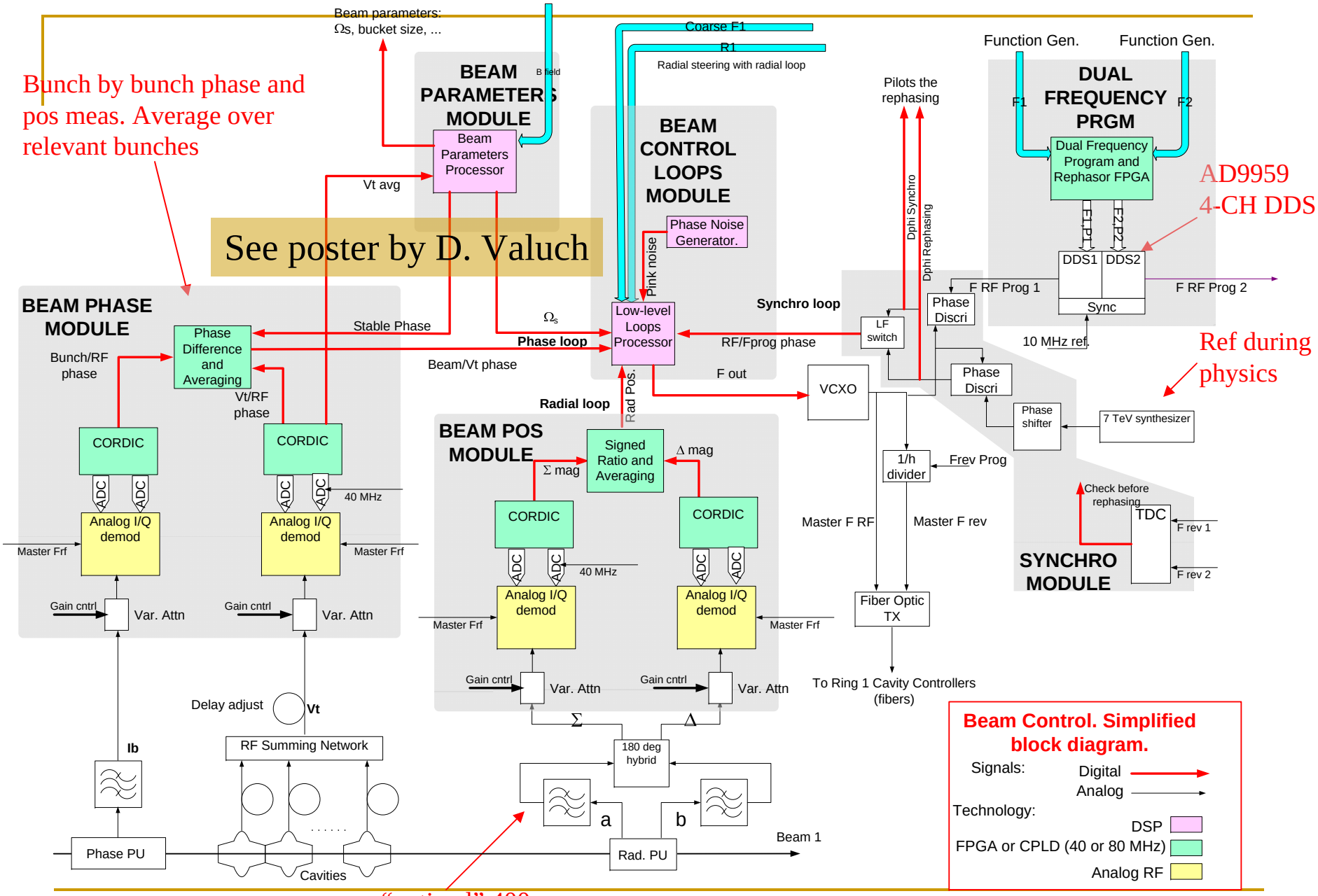
Bunch by bunch phase and pos meas. Average over relevant bunches
Beam parameters: Ωs, bucket size, ...
BEAM PARAMETERS MODULE
B field
Beam Parameters Processor
Vt avg
See poster by D. Valuch
Coarse F1
R1
Radial steering with radial loop
BEAM CONTROL LOOPS MODULE
Phase Noise Generator.
Pink noise
Low-level Loops Processor
Ωs
Synchro loop
Phase loop
RF/Fprog phase
F out
Radial loop
Rad Pos.
Pilots the rephasing
Dphi Synchro
Dphi Rephasing
LF switch
Phase Discri
Function Gen.
Function Gen.
F1
F2
DUAL FREQUENCY PRGM
Dual Frequency Program and Rephasor FPGA
F1,P1
F2,P2
DDS1
DDS2
Sync
F RF Prog 1
F RF Prog 2
10 MHz ref.
AD9959 4-CH DDS
Ref during physics
BEAM PHASE MODULE
Phase Difference and Averaging
Stable Phase
Bunch/RF phase
Vt/RF phase
Beam/Vt phase
CORDIC
CORDIC
ADC
ADC
40 MHz
Analog I/Q demod
Analog I/Q demod
Master Frf
Master Frf
Gain cntrl
Var. Attn
Gain cntrl
Var. Attn
Delay adjust
Vt
Ib
RF Summing Network
Phase PU
Cavities
BEAM POS MODULE
Signed Ratio and Averaging
Σ mag
Δ mag
CORDIC
CORDIC
40 MHz
Analog I/Q demod
Analog I/Q demod
Master Frf
Master Frf
Gain cntrl
Var. Attn
Gain cntrl
Var. Attn
Σ
Δ
180 deg hybrid
a
b
Rad. PU
Beam 1
VCXO
1/h divider
Frev Prog
Master F RF
Master F rev
Fiber Optic TX
To Ring 1 Cavity Controllers (fibers)
Phase shifter
7 TeV synthesizer
Check before rephasing
TDC
F rev 1
F rev 2
SYNCHRO MODULE
"optimal" 400 MHz BPF
Beam Control. Simplified block diagram.
Signals:
Digital
Analog
Technology:
DSP
FPGA or CPLD (40 or 80 MHz)
Analog RF

4. Status of Installation and Calendar

State of the LLRF project

- **Cavity Controller**: series production and installation. Conditioning and tuner already installed on 8 lines. RF feedback and Klystron Polar Loop will follow in November
- **Beam Control**: development nearing completion.
- **RF Synchronisation** (injectors plus experiments): series production.

Volume

- 20 racks in UX45 plus 15 racks in SR4
- ~ 50 special LLRF VME crates plus 5 standard VME crates
- ~ 500 NIM/VME cards of 36 different makes
- Series of ~900 modules being tested: 1 person from January 2007 plus 1 person from May 2007
- 900 modules include transverse damper, spares, modules for developments/upgrade, modules for other machines
- One “do-it-all” design was not favored…

EDMS Number	Description	Type	Nbr series
EDA-00331	Tuner RF frontend	RF-VME-220	25
EDA-00481	Clock Distribution Front Panel	RF-VME-220	70
EDA-00560	Clock Generator	RF-VME-220	20
EDA-00572	Tuner Control	RF-VME-220	25
EDA-00586	RF Feedback	RF-VME-220	45
EDA-00594	Clock Distribution Main Board	RF-VME-220	70
EDA-01442	RFModulator / Klystron Polar loop	RF-VME-220	25
EDA-01150	LHC One Turn Feedback	RF-VME-220	25
EDA-01150	ADT Loop	RF-VME-220	10
EDA-01148	VME Trigger Unit (VTU)	RF-VME-220	70
EDA-01xxx	Crate Management Module	RF-VME-220	70
EDA-01339	Injection Pulse Generator	RF-VME-220	6
EDA-01128	Clock Generator Daughter Board (PLL380)	RF-VME-220	20
EDA-00189	Analog Demodulator RF Part	RF-VME-220	25
EDA-01494	Analog Demodulator	RF-VME-220	25
EDA-01330	Quad DDS (Conditioning)	RF-VME-220	25
EDA-01197	Wide-Band Demux	RF-VME-220	10
EDA-01198	Wide-Band Switch	RF-VME-220	10
EDA-01159	LHC LL RF Backplane	15 Slot x 4TE	70
EDA-01427	Beam Phase Measurement	RF-VME-220	6
EDA-01427	Beam Position Measurement	RF-VME-220	12
EDA-01216	Crate Current Measurement	Custom	70
EDA-01429	SetPoint	RF-VME-220	25
EDA-01333	DC to 100 MHz Distribution	NIM	20
EDA-01334	10 to 80 MHz Distribution	NIM	58
EDA-01335	80 to 420 MHz Distribution	NIM	33
EDA-01336	F-REV Distribution	NIM	33
EDA-01341	Switch and Protect	RF-VME-220	25
EDA-01445	VCXO	RF-VME-220	6
EDA-01539	Phase Synchro	RF-VME-220	6
EDA-01535	LL Loops Interface	RF-VME-220	6
EDA-01331	RF Fiber Optic Transmitter Analog (RF TX A)	VME-160mm	5
EDA-01332	RF Fiber Optic Receiver Analog (RF RX A)	VME-160mm	5
EDA-01380	RF Fiber Optic Transmitter Digital (RF TX D)	VME-160mm	35
EDA-01382	RF Fiber Optic Receiver Digital (RF RX D)	VME-160mm	35
EDA-00572	LL Loops DSP	RF-VME-220	6
			892

Cavities in LSS4

UX45

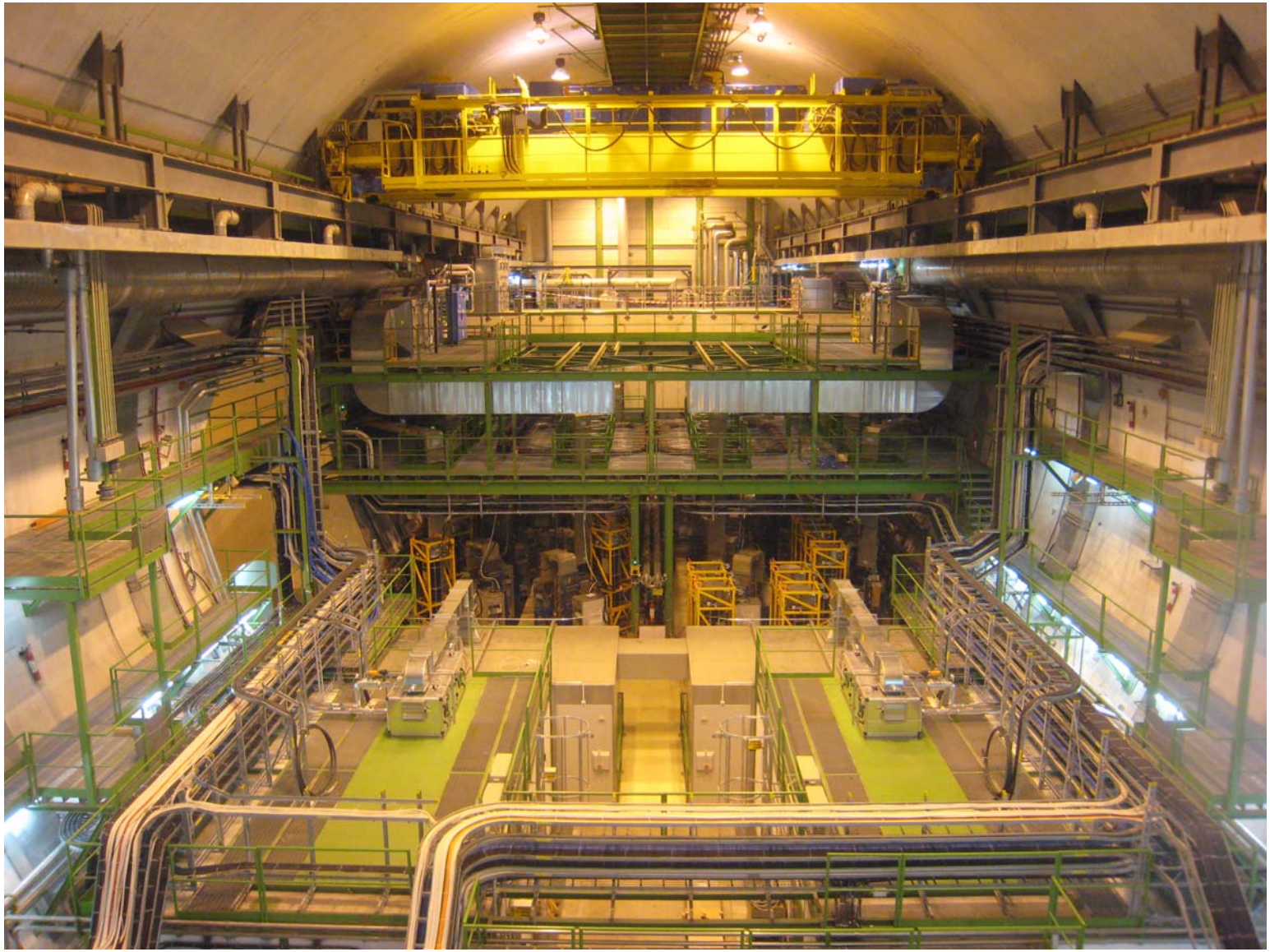

Waveguide platform

Klystrons

No access during beam-on!

Cavity Controllers in FC (air conditioned)

RF fdbk, and 1fdbk crate

Conditioning and Tuner crate

RF signals fan-out

Calendar

- In situ tests of klystrons with the LL electronics. **Now**
- Cavity cooling in octant 45. **Nov 1, 2007**
- Cavity Conditioning in UX45. **Nov 10, 2007**
- Cavity Loop Commissioning in UX45 (Tuner plus RF feedback). **End Nov 2007 ->**
- RF Synchronization SPS-LHC-EXP. **Jan-Feb 2008 ->**
- Finish developments for Beam control. **March 08**
- Beam Control & Transverse Feedback LL. with first beam **May 08**

References

[1] LHC Design Report, Vol 1, the LHC Main Ring, Chapter 6, CERN-2004-003-V1

[2] The LHC Low Level RF, P. Baudrenghien and al., EPAC 2006, Edinburgh

[3] Adaptive RF Transient Reduction for High Intensity Beams with Gaps, J.Tuckmantel, EPAC 2006, Edinburgh

[4] Simulation of LHC Bunches under Influence of 50-Hz multiple Lines on the Cavity Field, Joachim Tuckmantel, LHC Project Note-404, June 6, 2007

[5] Digital Design of the LHC Low Level RF: The Tuning system for the Superconducting Cavities, J. Molendijk, EPAC2006, Edinburgh

[6] The Tuning Algorithm of the LHC 400 MHz Superconducting Cavities, P. Baudrenghien, CERN, AB-Note-2007-011

[7] Longitudinal beam parameters during acceleration in the LHC, E. Shaposhnikova, CERN, LHC Project-Note-242

Thank you…

RF Feedback Loop

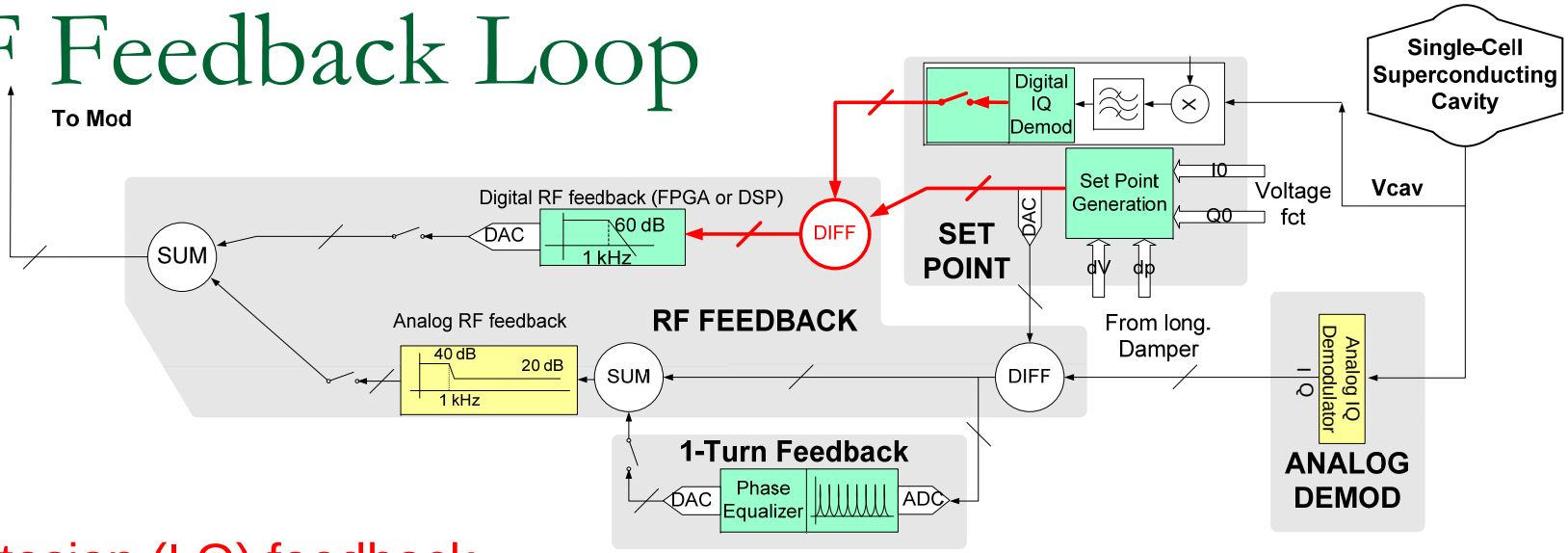

- Cartesian (I,Q) feedback
- Hybrid system: Digital and Analog paths in parallel
  - Digital path:
    - 2 kHz -3 dB BW.
    - Responsible for the precision at the exact (centre) 400.8 MHz frequency
    - Keeps precise accelerating voltage in the presence of tuning/coupling variations
    - Reduces low freq noise injected into cavity
  - Analog path:
    - AC coupled, 100 MHz BW. (~15 ns group delay)
    - Transient beam loading compensation. Responsible of all F_{rev} sidebands
    - Longitudinal beam stability
    - Total loop delay ~ 600 ns

Klystron Polar Loop

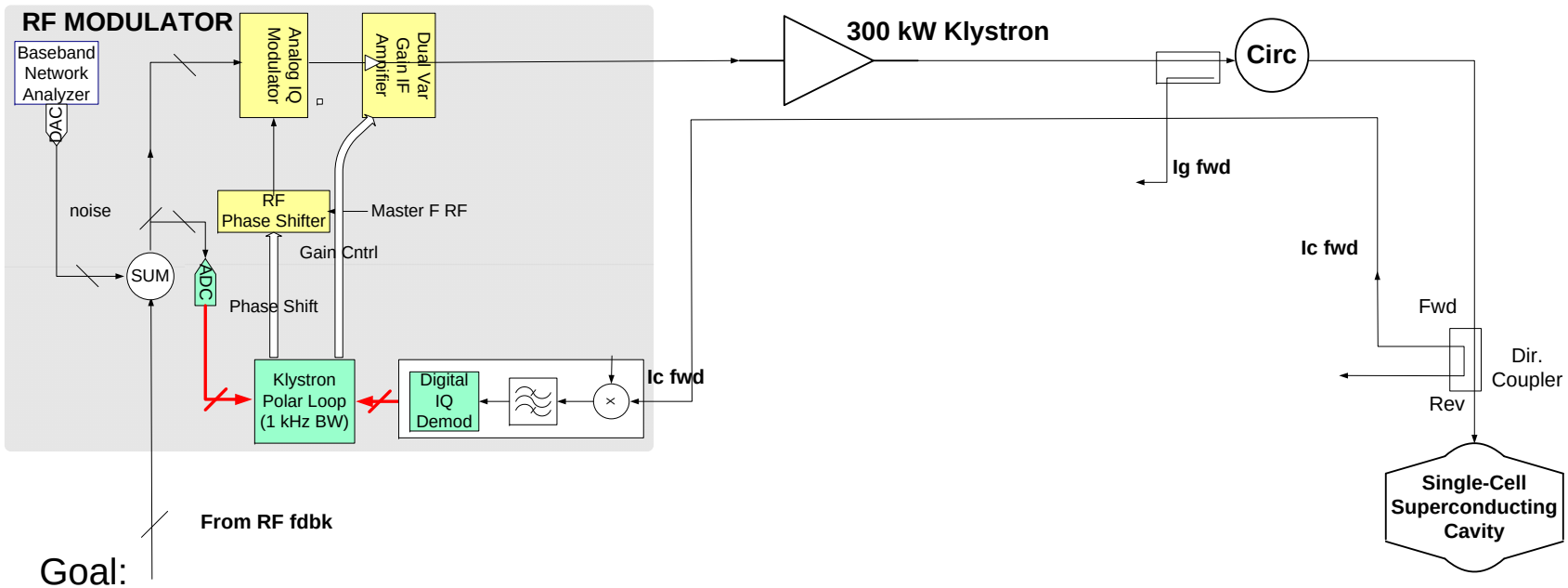

- Goal:
  - Keep RF feedback stable in presence of HT droop:1 % HT ripple -> 8.4 degrees @ 400.8 MHz
  - Compensate for 400 MHz phase and amplitude ripples due to HT ripples
- SM18 test set-up:
  - 4 degrees peak to peak ripple @ 400 MHz
  - 5 % RF power ripple @ 400 MHz
  - mainly 100 Hz and 600 Hz
- Correct with polar loop: VGA + Phase Shifter. Expect following performance
  - Perfect static compensation (Integrator in loop)
  - Compensation for ripples

Frequency	Reduction
50 Hz	46 dB
600 Hz	35 dB
11 kHz	0 dB

Synchro Loop

- A Dual DDS driven by function (magnetic field plus radial steering) generates 400 MHz Reference for each ring.
- For each ring a VCXO generates Master 400 MHz RF sent to Cavity Controllers (fiber optic links).
- A weak Synchro Loop locks the Master RF onto the DDS Reference.
- During physics the DDS output is replaced by a low noise Synthesizer.
- Synchro Loop is always ON except for MD when acceleration is performed with radial loop.

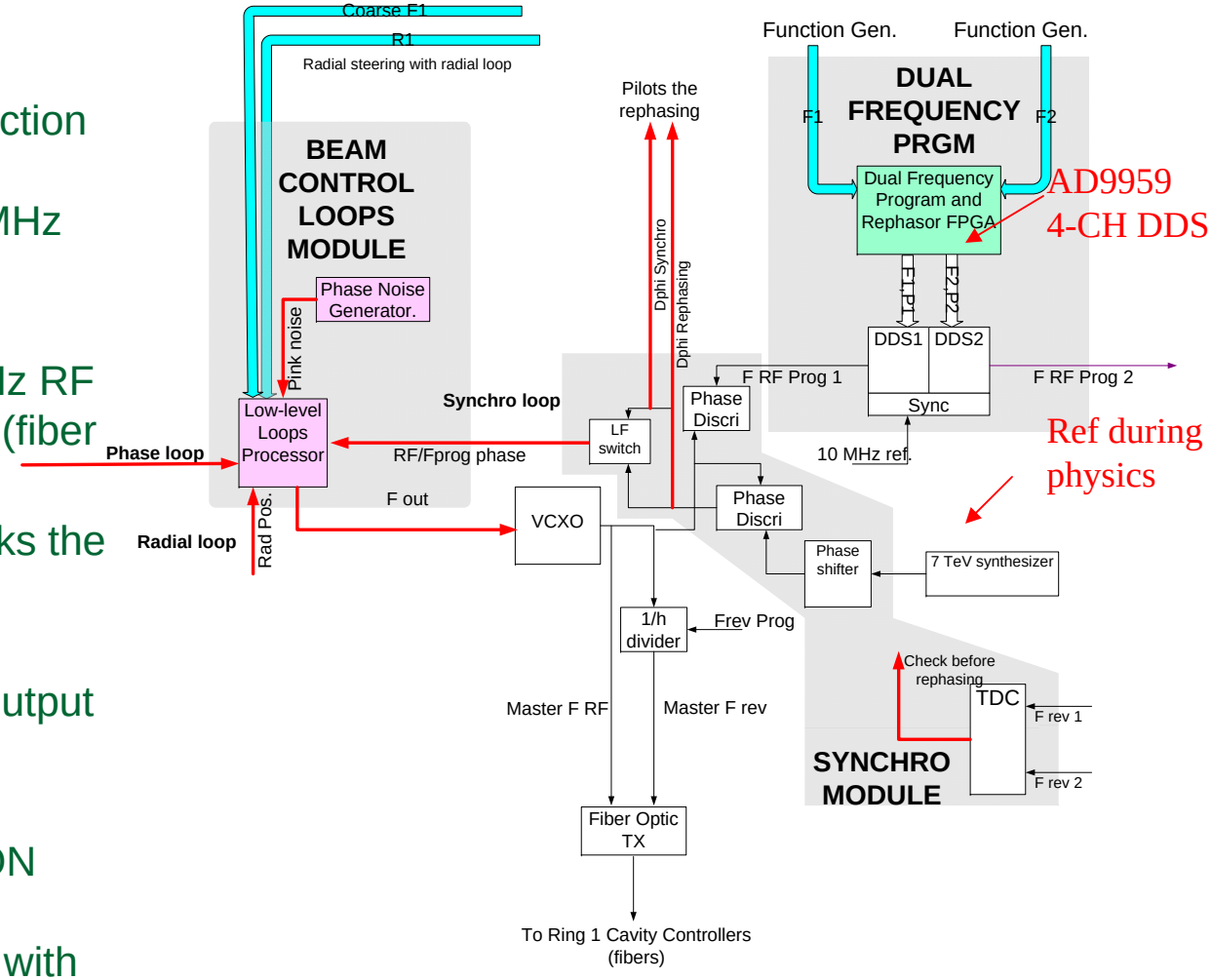

Phase Loop

1 Gbps serial links

Bunch heigth to Long damper

Bunch/RF phase To Long damper

Bunch by bunch phase and pos meas. Average over relevant bunches

See poster by D. Valuch

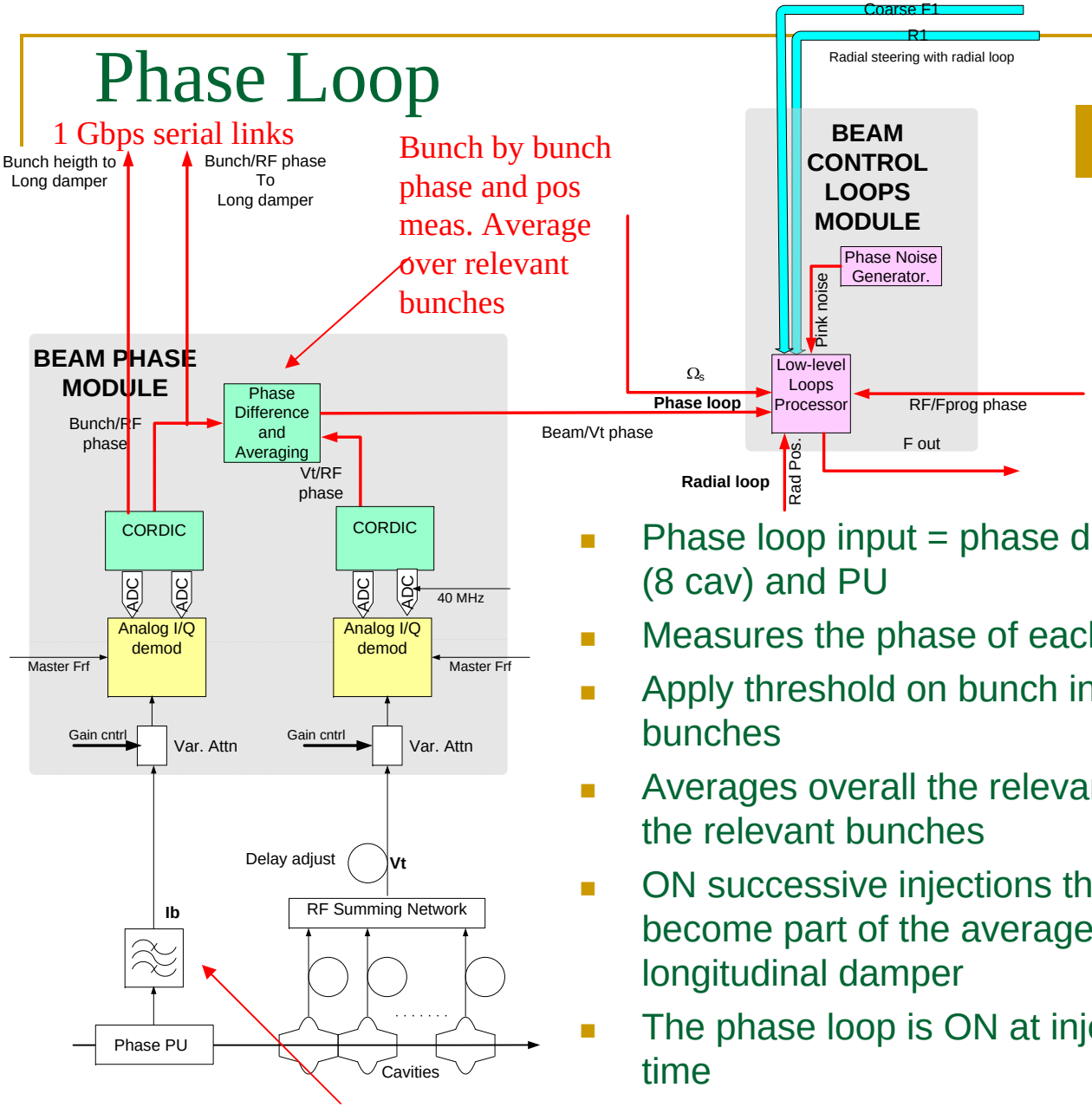

- Phase loop input = phase difference between cavity sum (8 cav) and PU
- Measures the phase of each bunch
- Apply threshold on bunch intensity to discard marginal bunches
- Averages overall the relevant bunches. A mask identifies the relevant bunches
- ON successive injections the newly injected bunches become part of the average only after stabilization by the longitudinal damper
- The phase loop is ON at injection and remains ON all the time

"optimal" 400 MHz BPF

Radial Loop

- Transverse position of each bunch measured at each turn
- Threshold and mask applied to give an average
- Averaged radial position can replace synchro loop during commissioning or MDs

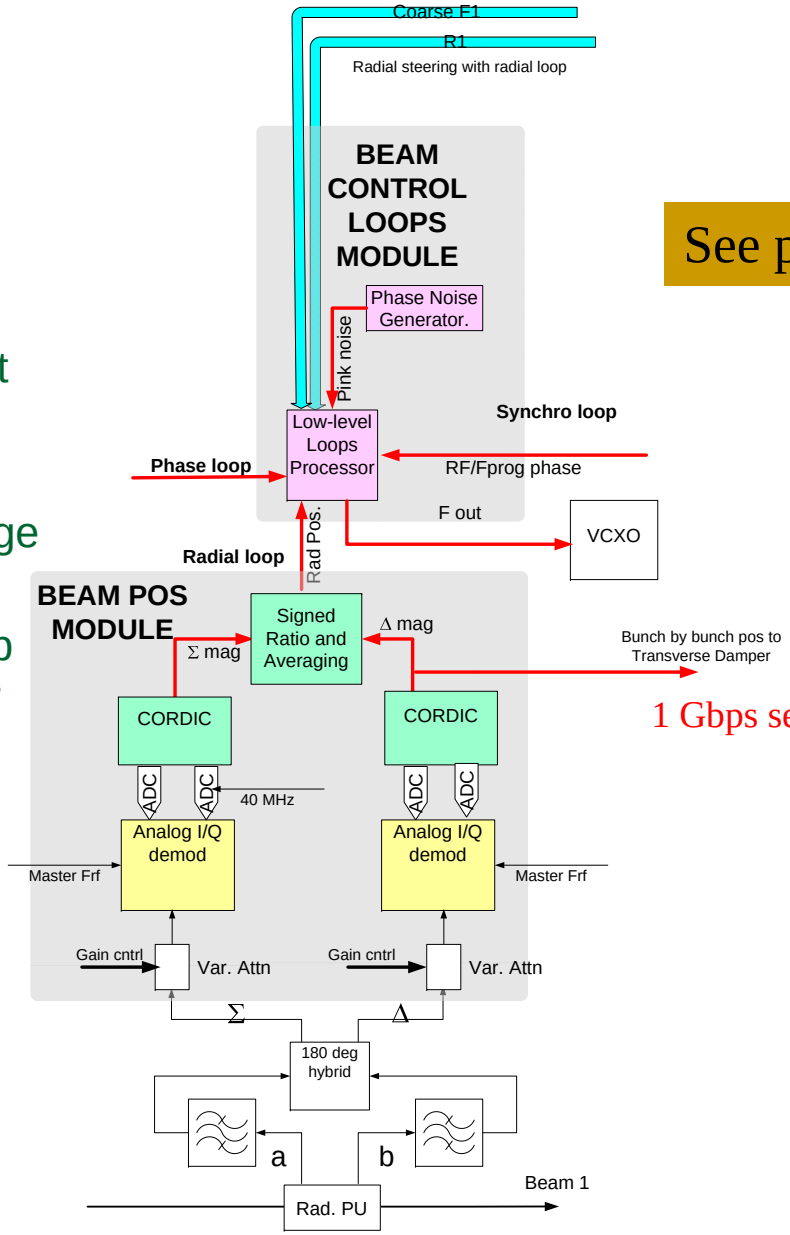

See poster by D. Valuch

1 Gbps serial links