The LLRF System Design for the European XFEL

Wojciech Jalmuzna
Tomasz Jezynski

The German Electron Synchrotron – DESY
(Deutches Elektronen-Synchrotron)
Hamburg, Germany

http://www.desy.de
email: tomasz.jezynski@desy.de
wojciech.jalmuzna@desy.de

Outline

- Introduction
- Requirements
- LLRF System based on ATCA
- Software for LLRF

Wojciech Jalmuzna - wojciech.jalmuzna@desy.de
Tomasz Jezynski - tomasz.jezynski@desy.de

Introduction

- Total length of the facility: 3.4 km, Accelerator tunnel: 2.1 km, Depth underground: 6 - 38 meters
- Wavelength of X-ray radiation: 6 to 0.085 nm
- ~1000 s.c. cavities (1.3 GHz), 30 RF station 30 MV/m(10 MW klystron)
- Required field stability : 10^{-5} in amplitude, 0.01° in phase
- Continuous operation is required: one maintenance day per month
- **One tunnel**

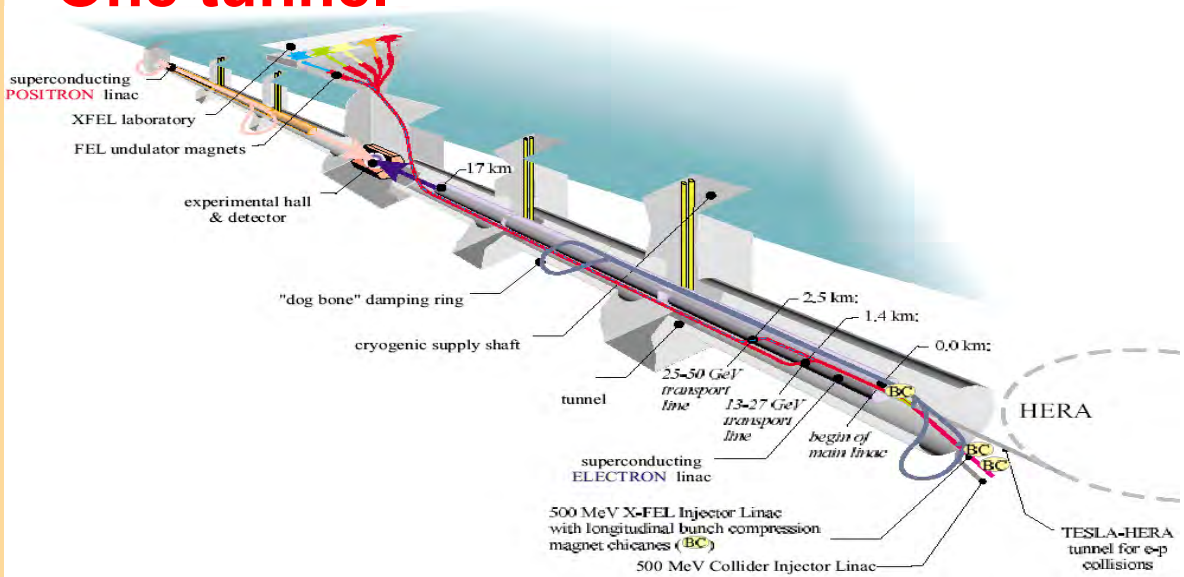

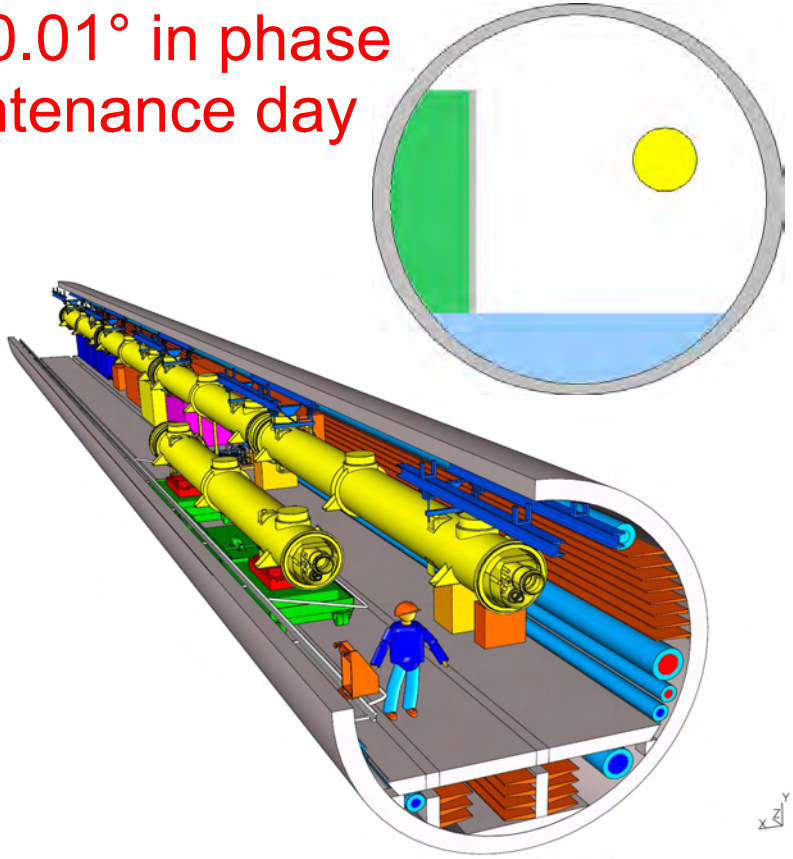

Wojciech Jalmuzna - wojciech.jalmuzna@desy.de
Tomasz Jezynski - tomasz.jezynski@desy.de

Introduction

The LLRF station

- **LLRF Controller**
  - **>100** analog inputs 1.3 GHz, 0dBm
  - Down-conversion required (IF 1-100 MHz, 14 bits, 50-100 MHz SF)
  - Logic
  - Up-converter / VM
- MO and distribution
- Transient detector
- Piezo controller and driver (in. & out.)
- System latency < 1µs (incl. cables)
- Low latency links to other modules, e.g.
  - Piezodriver 32 slow analog (Lorenz forces and microphonics)
  - Global Control System

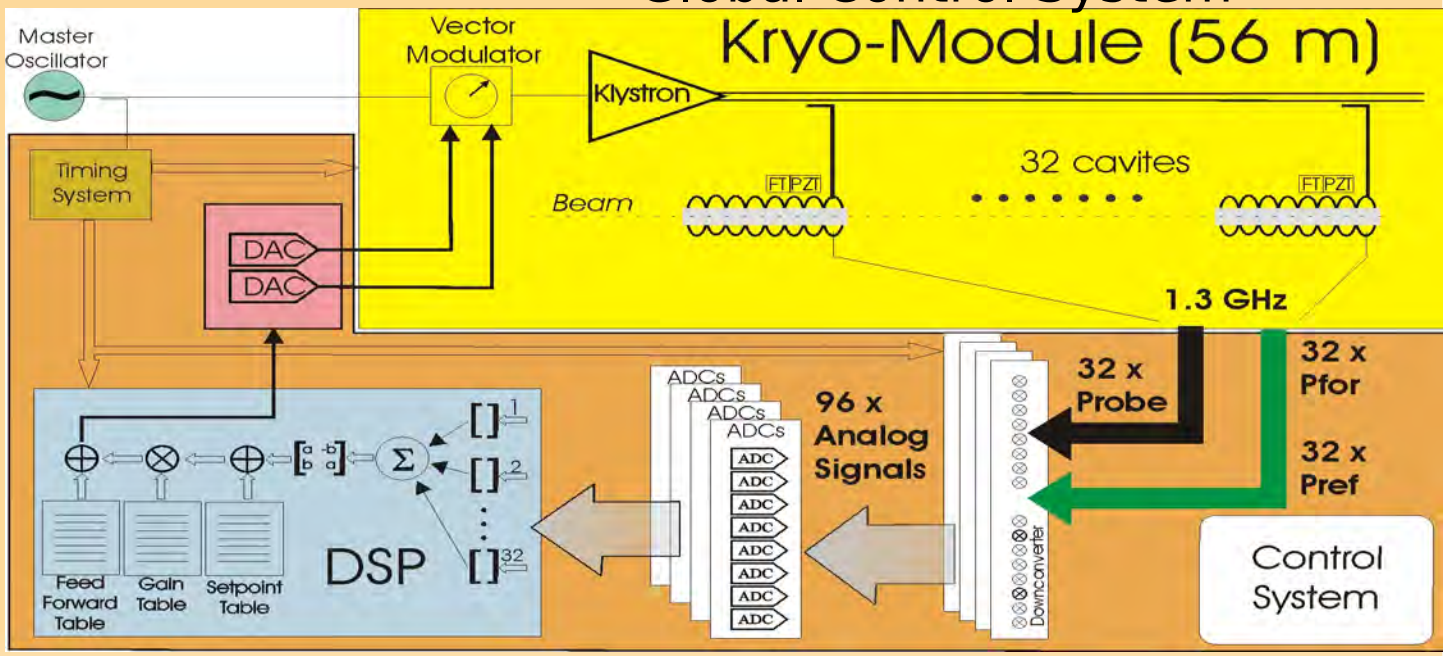

Wojciech Jalmuzna - wojciech.jalmuzna@desy.de
Tomasz Jezynski - tomasz.jezynski@desy.de

Requirements
(not all !)

- Scalable / Flexible (modularity - *partially upgradeable,* add new,not know during design,functionality)
- Reliable / Redundant (VM, timing, power,etc...)
- Components available in the next 20 years *(multi-vendor)*
- Fast and high resolution inputs, > 100 inp. a. ch. / RF St.
- Low latency *(fast communication links)*
- Support modern control algorithms ➡
- Limited number of different boards
- Low-cost version available *(monitoring)*
- Easy to maintain - ***No front panel connections***
- Reliability, operability and maintainability based on an average lifetime of 20 years with an average uptime in excess of 99%

Wojciech Jalmuzna - wojciech.jalmuzna@desy.de
Tomasz Jezynski - tomasz.jezynski@desy.de

Requirements
(not all !)

- Scalable / Flexible (modularity - *partially upgradea* design,functionality)
- Reliable / Redundant (VM, timing, power,etc...)
- Components available in the next 20 years
- Fast and high resolution inputs, > 100 inp.
- Low latency *(fast communication links)*
- Support modern control algorithms
- Limited number of different boards
- Low-cost version available *(monitoring)*

rotation matrix for gradient calibration
rotation matrix for loop phase
vector-sum calculation
field error calculation
feedback algorithm
feedforward algorithm
beam loading compensation
exception handling
beam phase measurement
gradient calibration
forward/reflected power calibration
cavity detuning
loaded Q measurement
adaptive feedforward
klystron linearisation
slow (motorized) frequency tuner control
fast (piezo) tuner control
waveguide tuner (phase and loaded Q) control
quench detection
exception handling
momentum management
field control parameter optimisation
availability optimisation
LLRF system diagnostics

- Easy to maintain - ***No front panel connections***
- Reliability, operability and maintainability based on an average lifetime of 20 years with an average uptime in excess of 99%

Wojciech Jalmuzna - wojciech.jalmuzna@desy.de
Tomasz Jezynski - tomasz.jezynski@desy.de

LLRF System

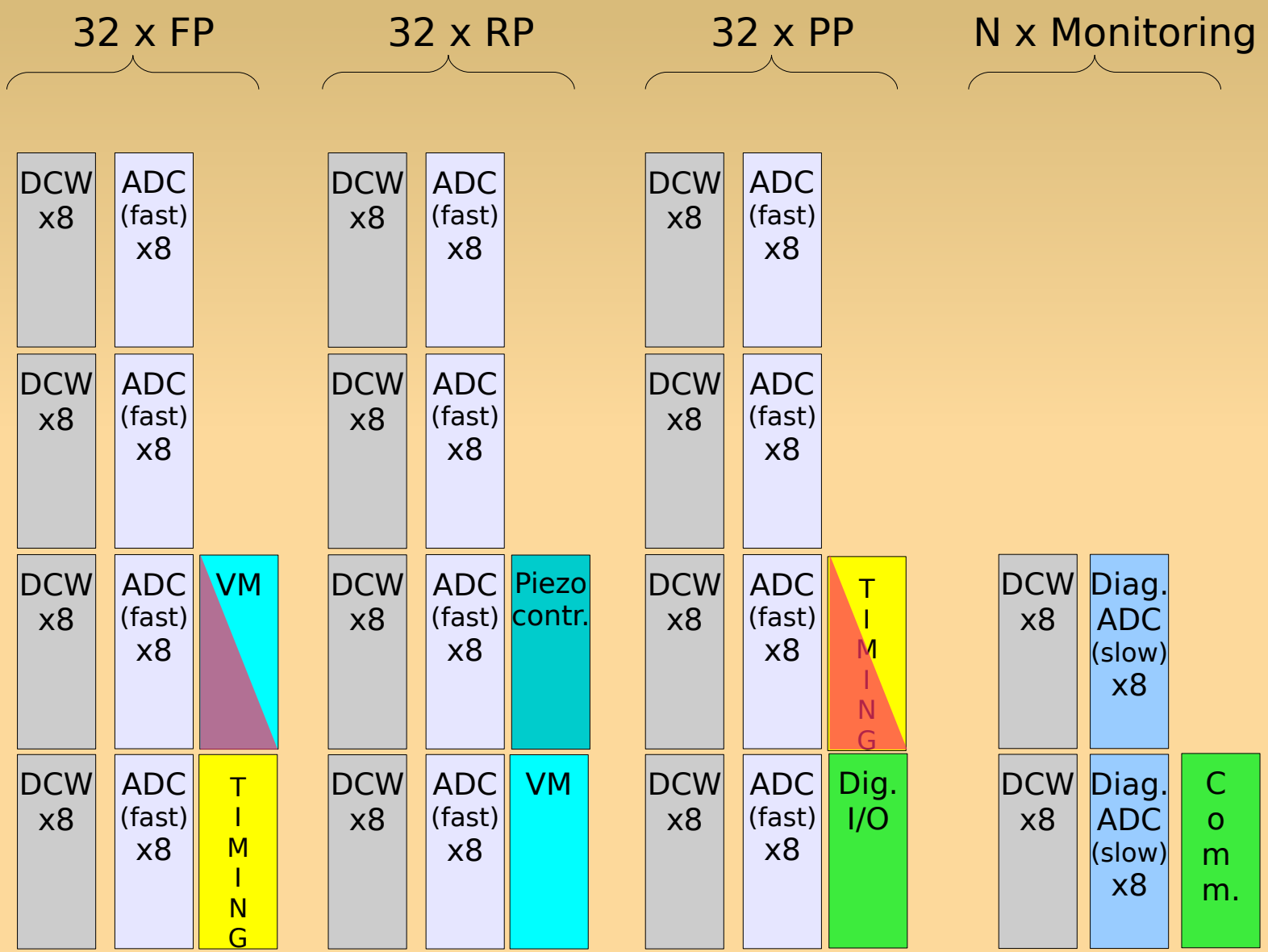

Wojciech Jalmuzna - wojciech.jalmuzna@desy.de
Tomasz Jezynski - tomasz.jezynski@desy.de

LLRF System

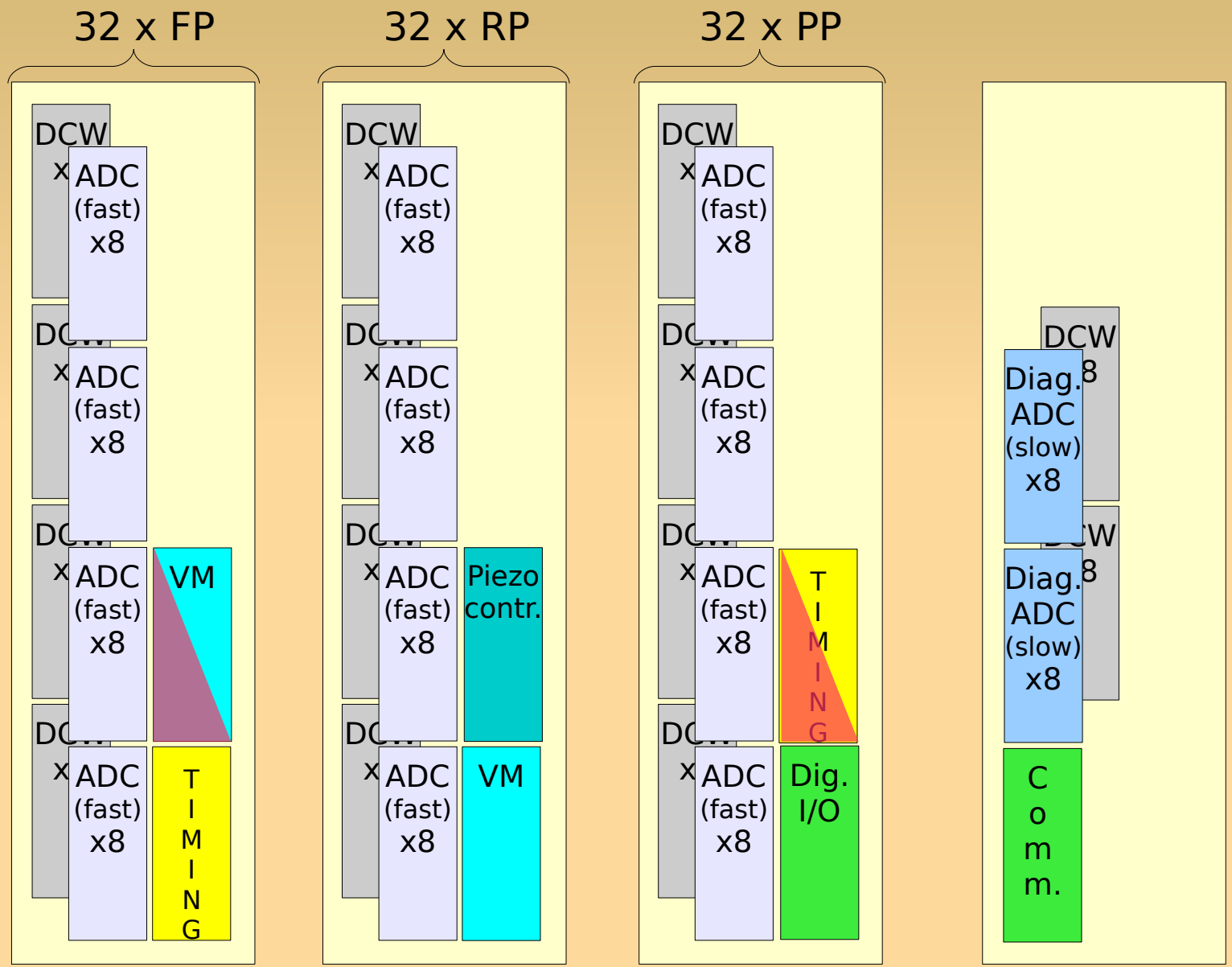

Wojciech Jalmuzna - wojciech.jalmuzna@desy.de
Tomasz Jezynski - tomasz.jezynski@desy.de

LLRF System Based on ATCA

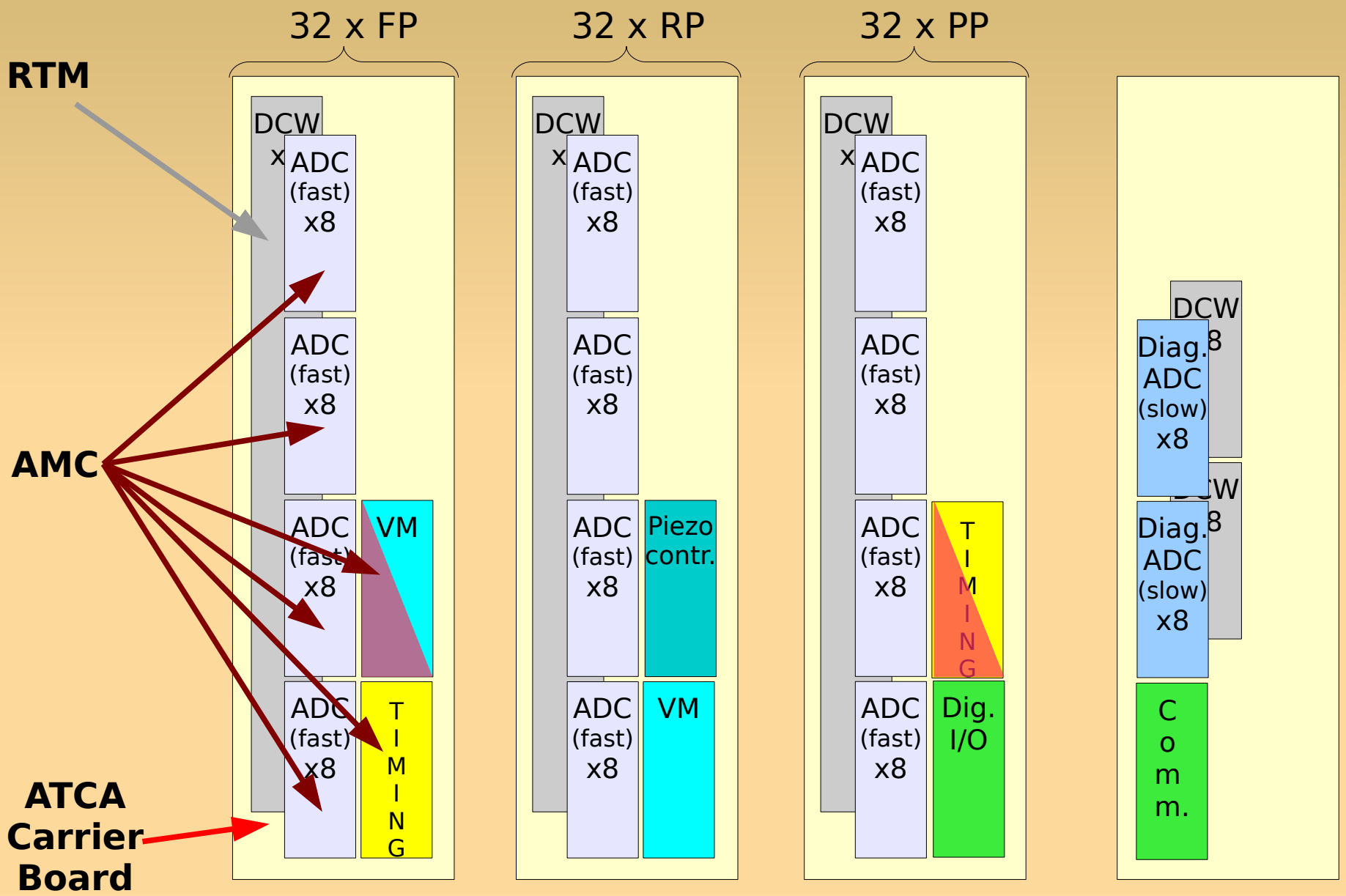

Wojciech Jalmuzna - wojciech.jalmuzna@desy.de
Tomasz Jezynski - tomasz.jezynski@desy.de

LLRF System Based on ATCA

- Scalable / Flexible (modularity - *partially upgradeable,* add new,not know during design,functionality)
- Reliable / Redundant (VM, timing, power,etc...)
- Components available in the next 20 years *(multi-vendor)*
- Fast and high resolution inputs, > 100 inp. a. ch. / RF St.
- Low latency *(fast communication links)*
- Support modern control algorithms
- Limited number of different boards
- Low-cost version available *(monitoring)*
- Easy to maintain - ***No front panel connections***
- Reliability, operability and maintainability based on an average lifetime of 20 years with an average uptime in excess of 99%

Wojciech Jalmuzna - wojciech.jalmuzna@desy.de
Tomasz Jezynski - tomasz.jezynski@desy.de

LLRF System Based on ATCA

Carrier Board:

- 6 x AMC bay
- LLRF signals in ZONE 3

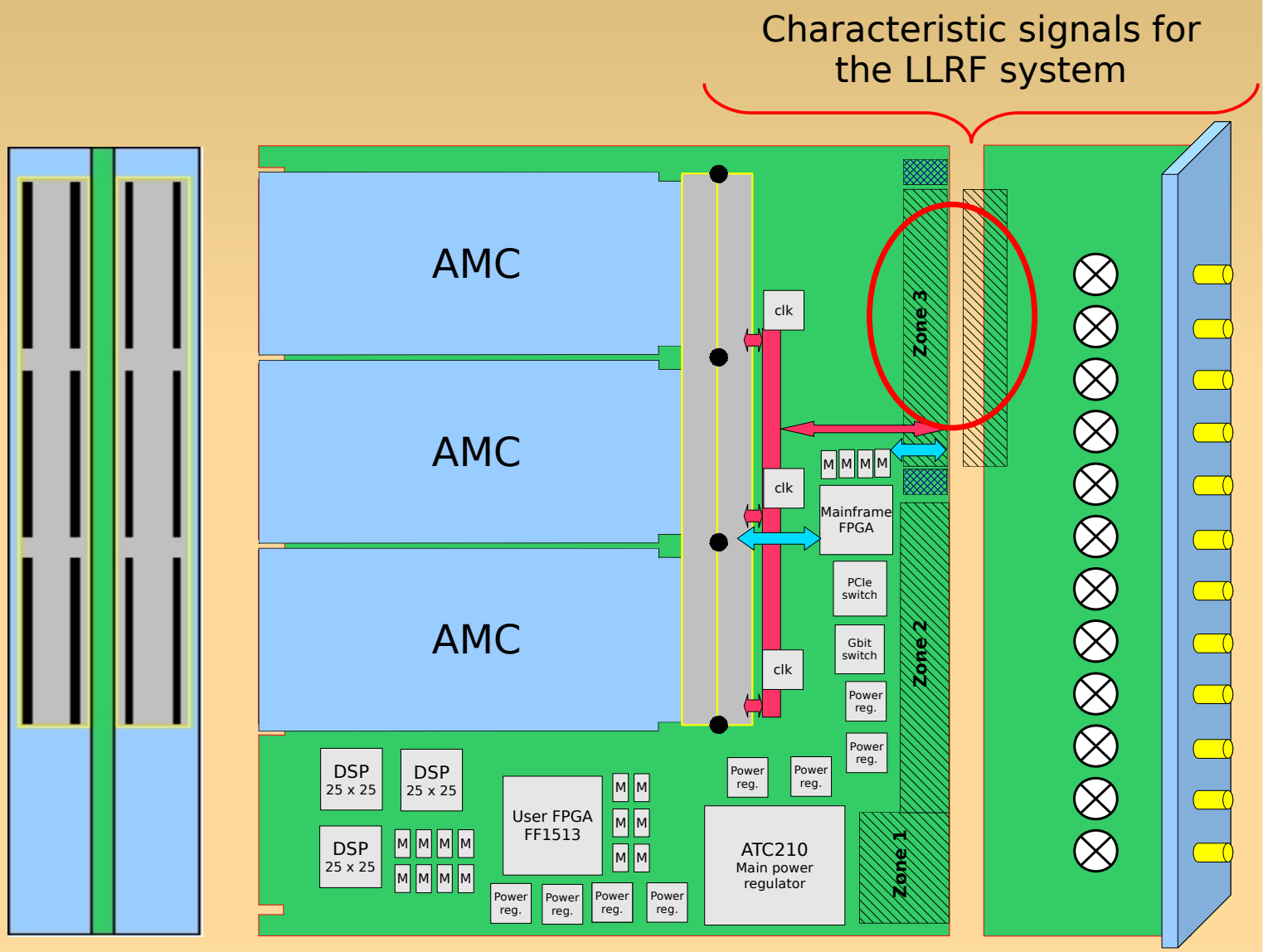

Wojciech Jalmuzna - wojciech.jalmuzna@desy.de
Tomasz Jezynski - tomasz.jezynski@desy.de

LLRF System Based on ATCA

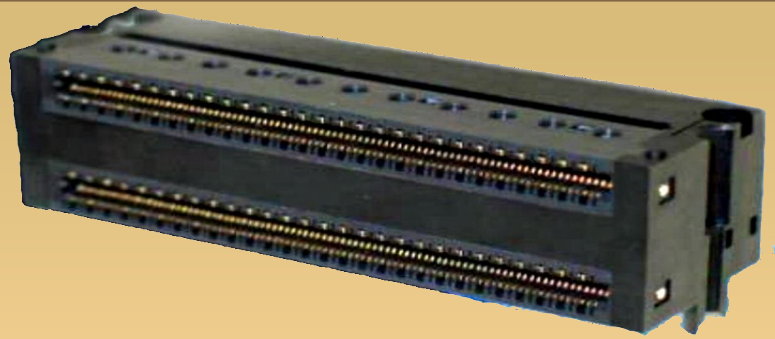

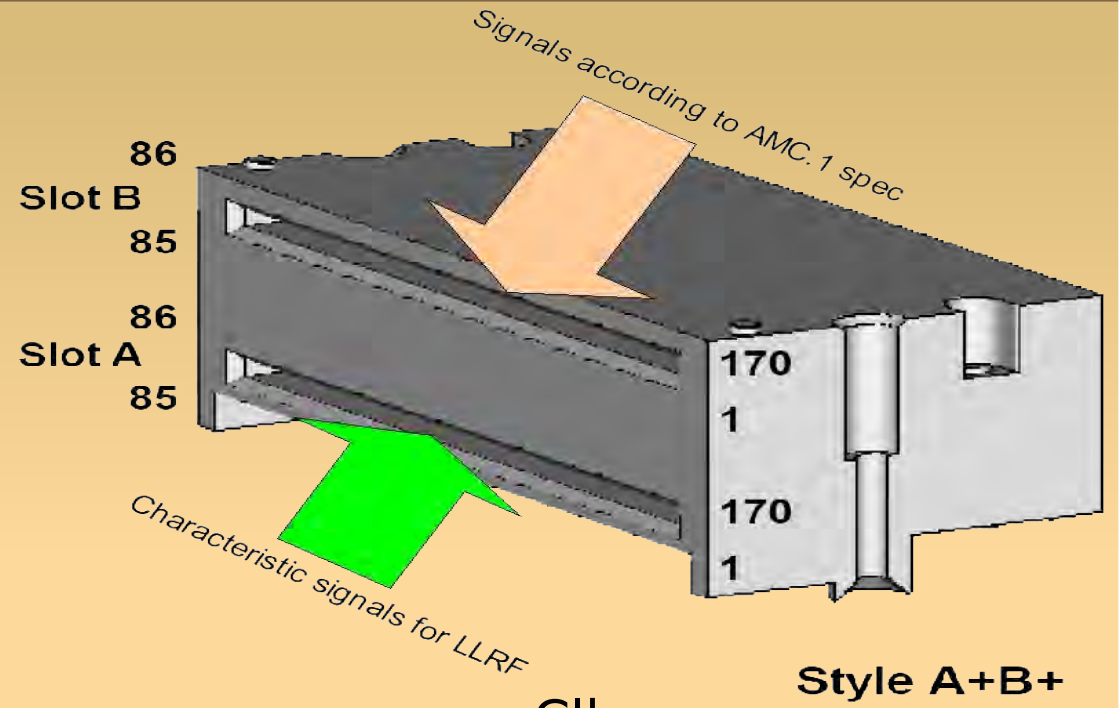

- Connector A+B+ (Yamaichi)
  - Attenuation: <1dB at 8GHz and <2dB at 12GHz
  - Return Loss: <20dB at 5GHz and <13dB at 8GHz

- Separation of analog and digitals signals

Analog signals

DSP signals

Clk. & Trig. signals

10 diff. pairs for low latency link

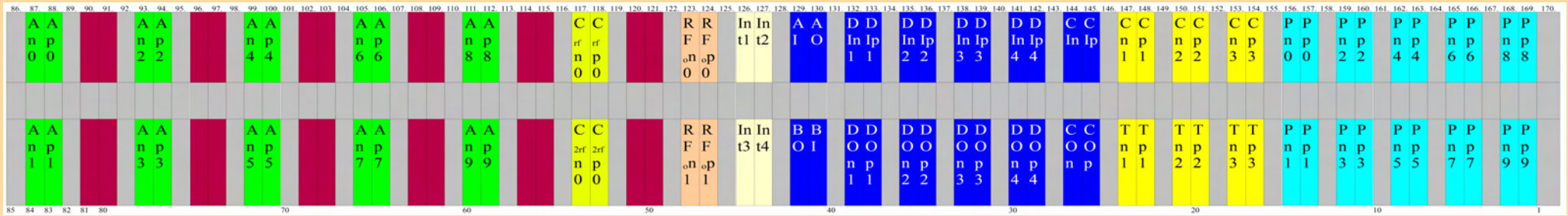

Wojciech Jalmuzna - wojciech.jalmuzna@desy.de
Tomasz Jezynski - tomasz.jezynski@desy.de

LLRF System Based on ATCA

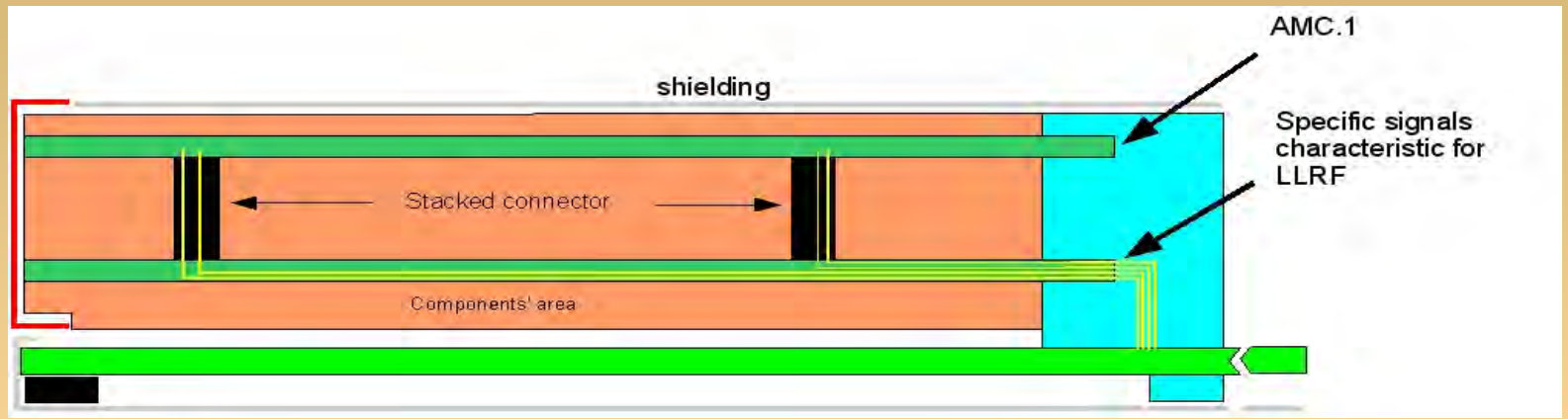

DESY-AMC

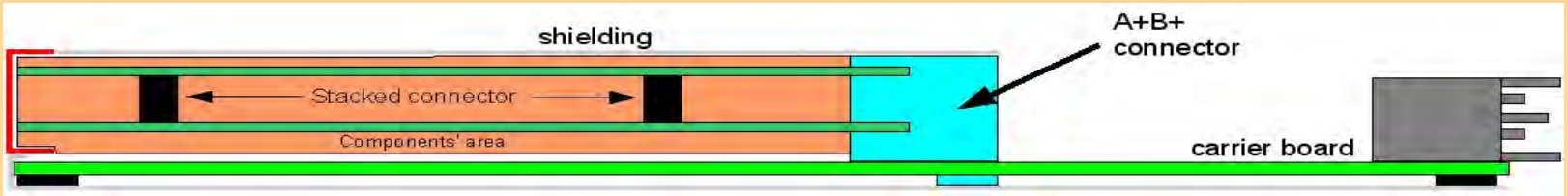

AMC half height

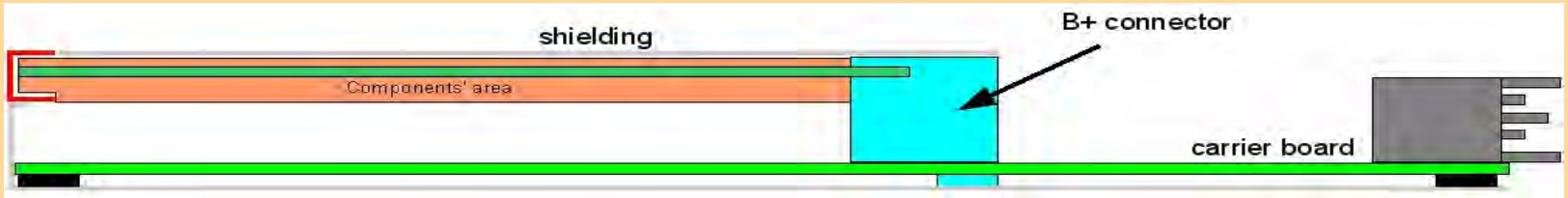

AMC full height

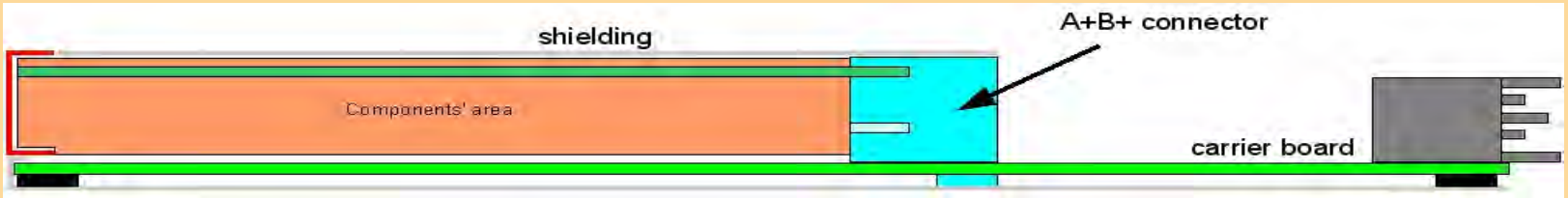

Wojciech Jalmuzna - wojciech.jalmuzna@desy.de
Tomasz Jezynski - tomasz.jezynski@desy.de

LLRF System Based on ATCA

- **6 x** AMC.1 bays (half or full height)
- IPMI v. 1.5
- Xilinx FX4 (user FPGA)
- 3 x TigerSHARC
- Xilinx V5 (Firmware FPGA)
- <u>Standalone mode</u>
- Gigabit Ethernet on ZONE
- PCIEx on board

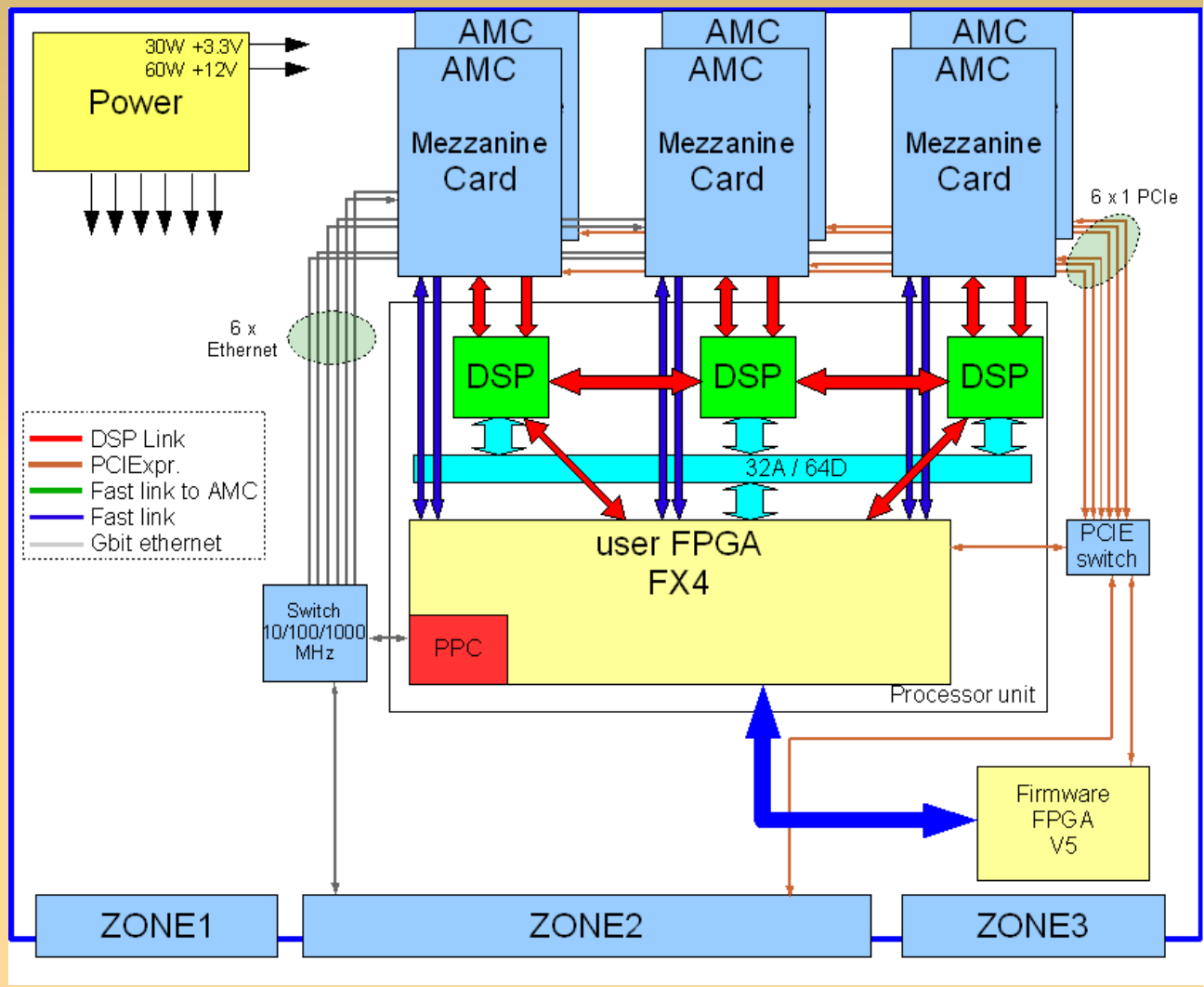

Wojciech Jalmuzna - wojciech.jalmuzna@desy.de
Tomasz Jezynski - tomasz.jezynski@desy.de

LLRF System Based on ATCA

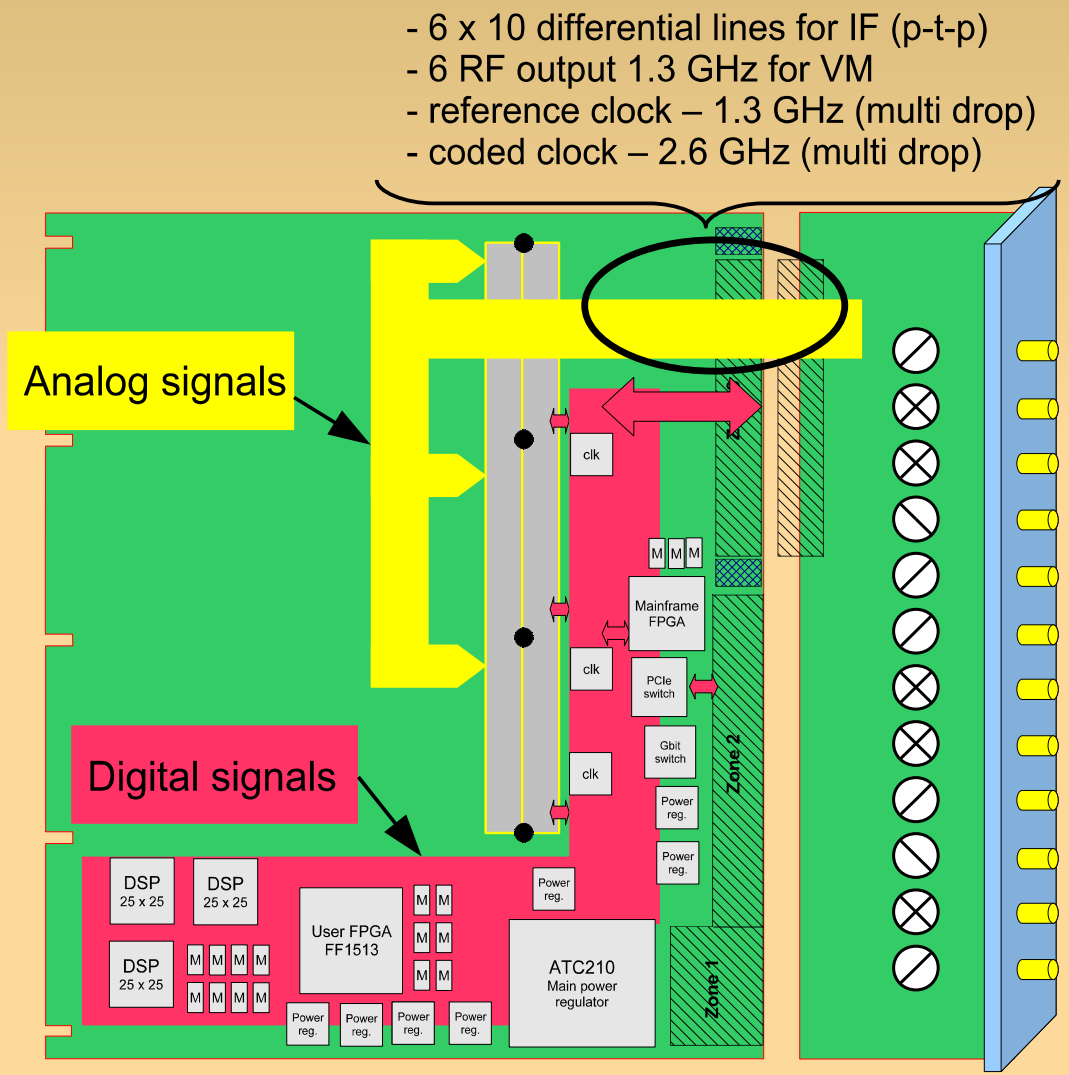

- Analog and digital lines are separated
- For analog signals and fast digital lines strip-lines are designed (isolation, EMI)

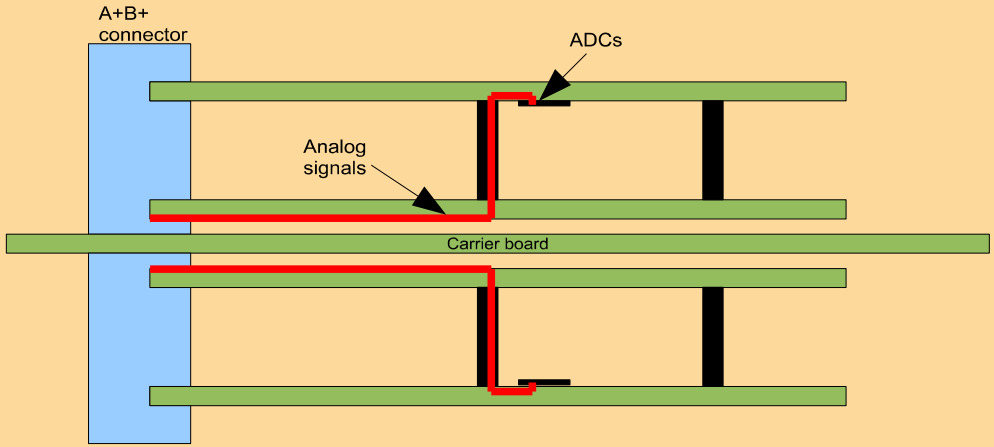

Wojciech Jalmuzna - wojciech.jalmuzna@desy.de
Tomasz Jezynski - tomasz.jezynski@desy.de

LLRF System Based on ATCA

Modules developed at DESY

AMC Boards:

- ADC 8 inputs SF < 100MHz (monitoring, piezo sensor)
- ADC (fast) 2-4 inputs (SF>500 MHz) – direct sampling, transient
- Timing module
- Digital up-converter
- Vector modulator
- Communication module
- Piezo controller
- Digital I/O

RTM Modules:

- 32 ch. down-converter

Wojciech Jalmuzna - wojciech.jalmuzna@desy.de
Tomasz Jezynski - tomasz.jezynski@desy.de

LLRF System Based on ATCA

3 x clock & 3 x trigger signals generated at any AMC slot must be distributed to each AMC slot and others carrier boards

- LVDS bus
  - bidirectional buffers
    - OE
    - DIR

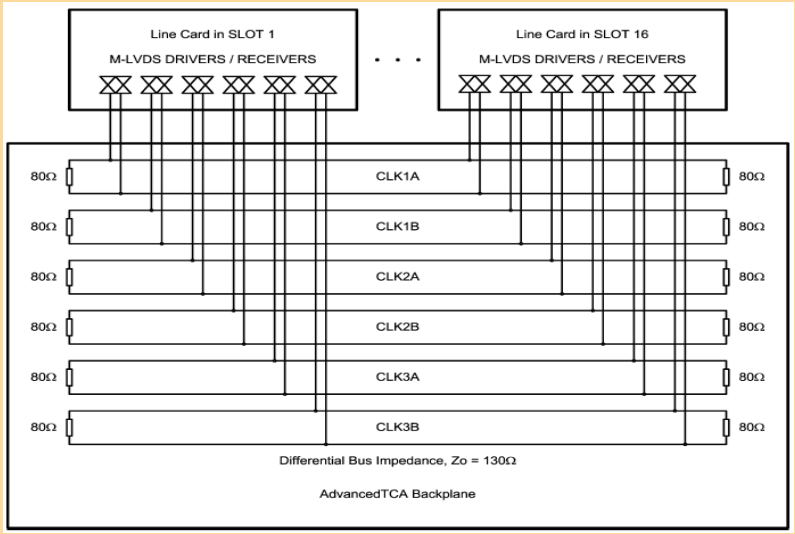

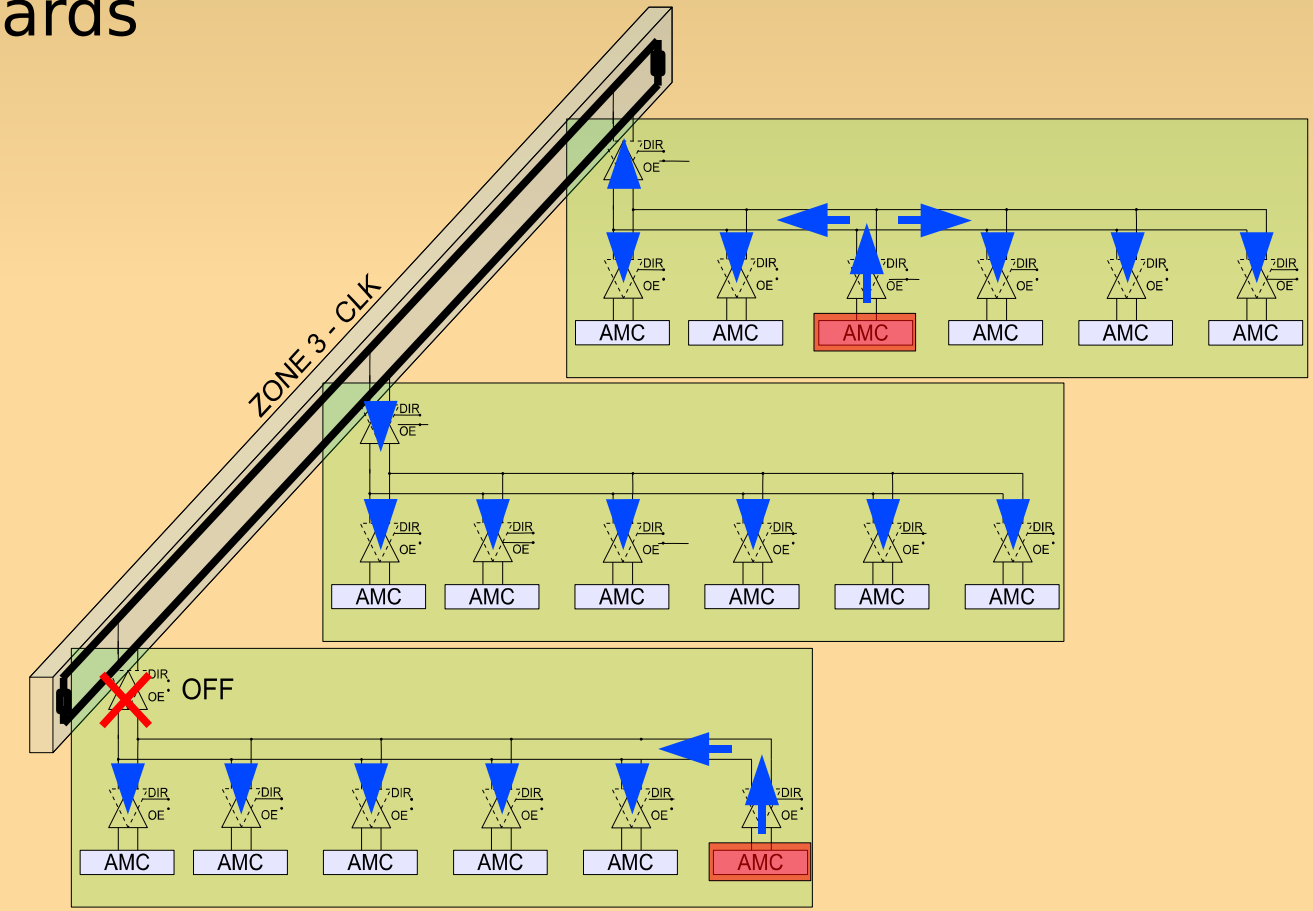

Wojciech Jalmuzna - wojciech.jalmuzna@desy.de
Tomasz Jezynski - tomasz.jezynski@desy.de

LLRF System Based on ATCA

ELMA
Your Solution Partner

µTCA ?

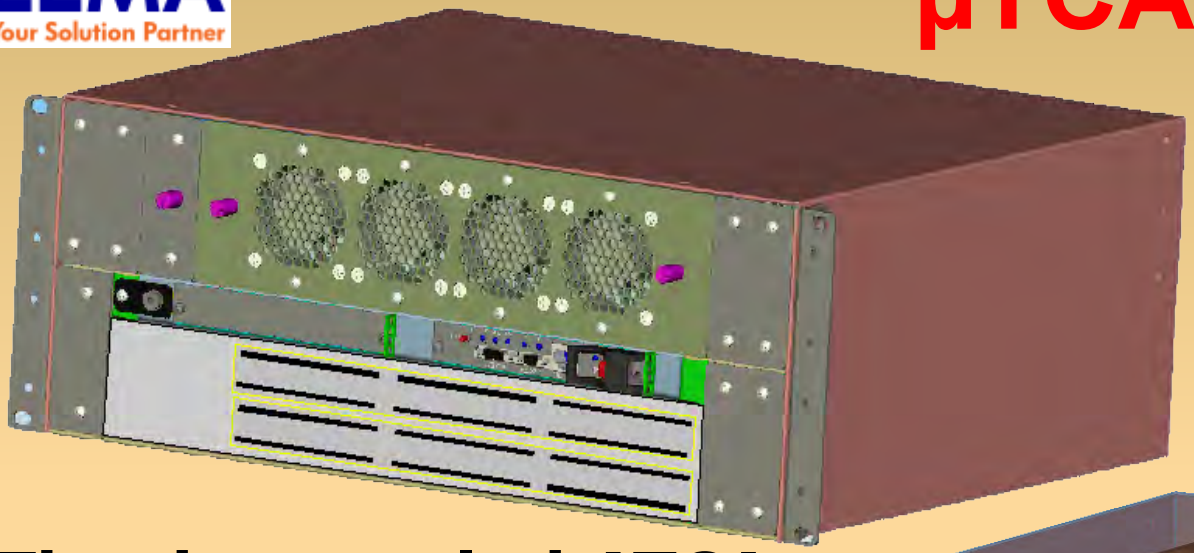

The dust sealed ATCA Chassis 4U

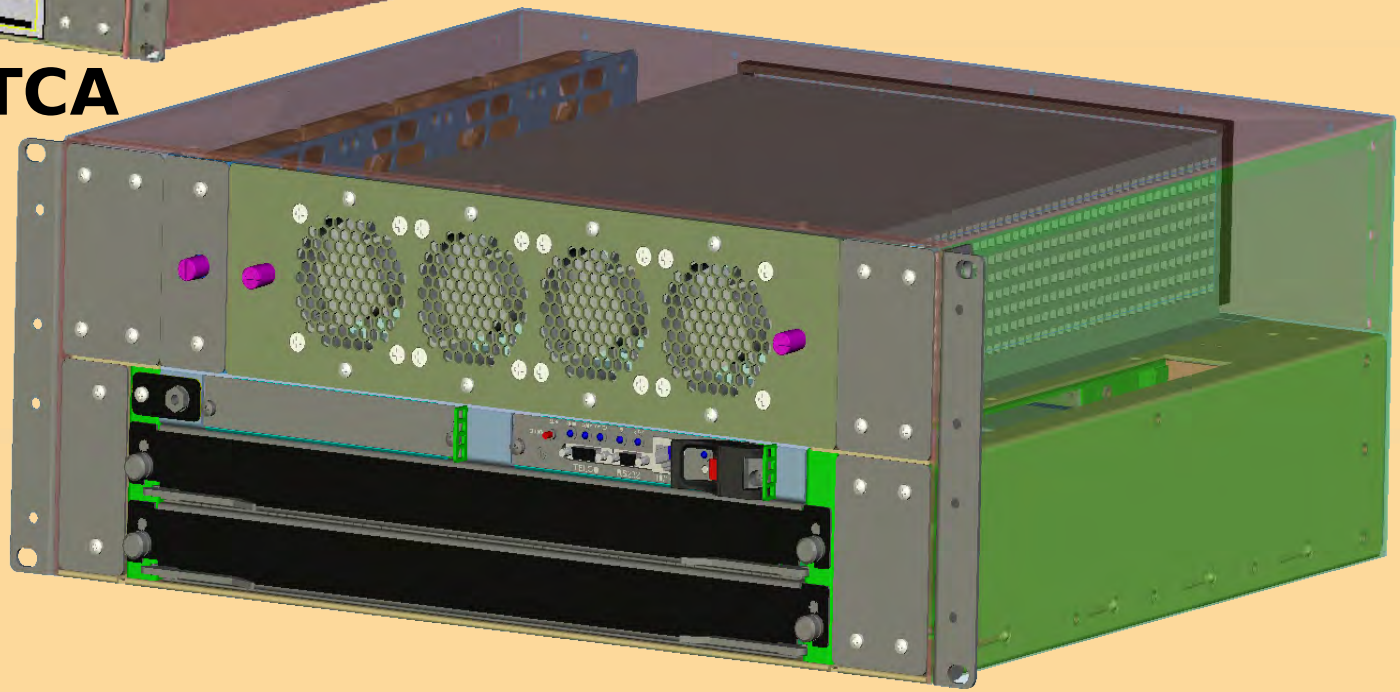

Wojciech Jalmuzna - wojciech.jalmuzna@desy.de
Tomasz Jezynski - tomasz.jezynski@desy.de

LLRF System Based on ATCA

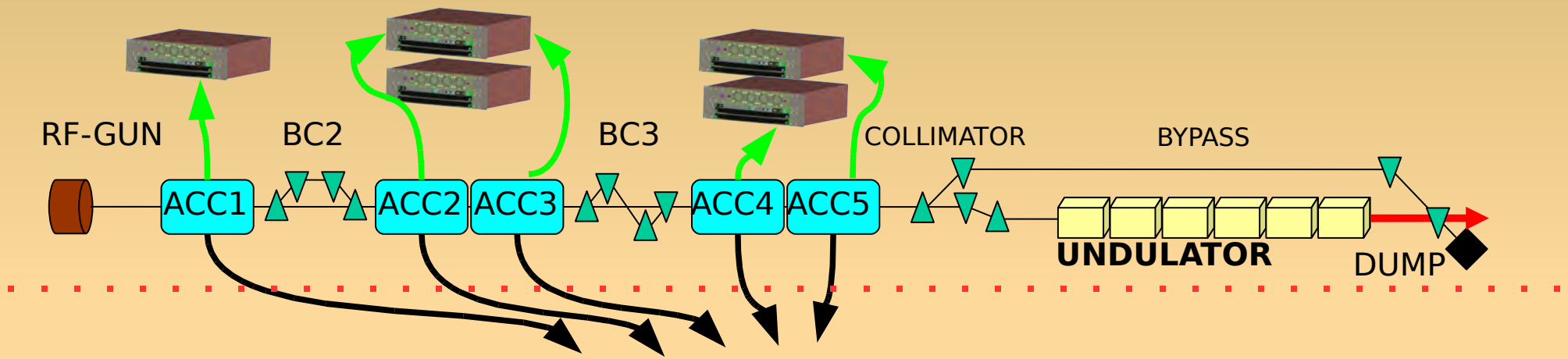

Wojciech Jalmuzna - wojciech.jalmuzna@desy.de
Tomasz Jezynski - tomasz.jezynski@desy.de

2007-2013 (7 years)

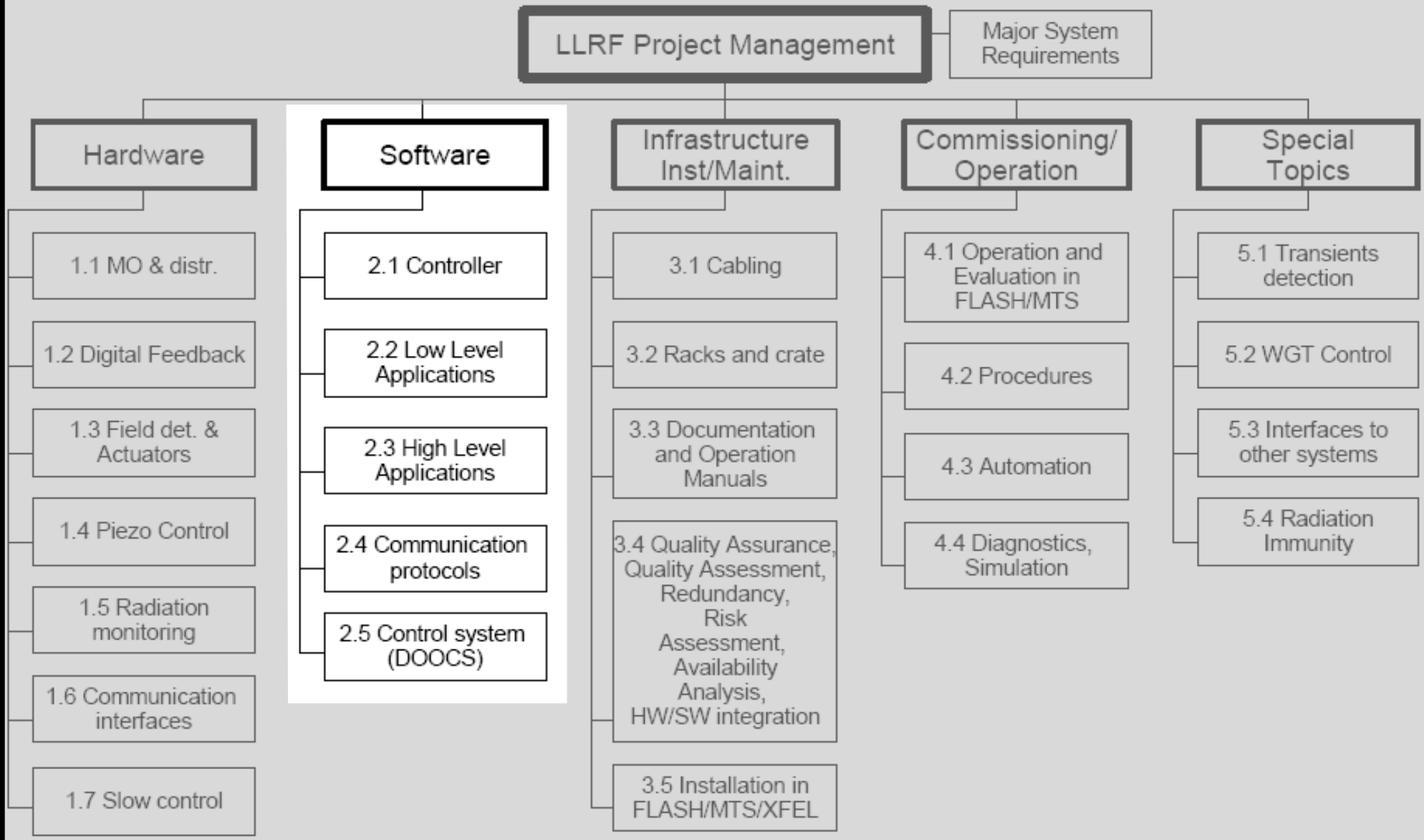

Algorithm Distribution

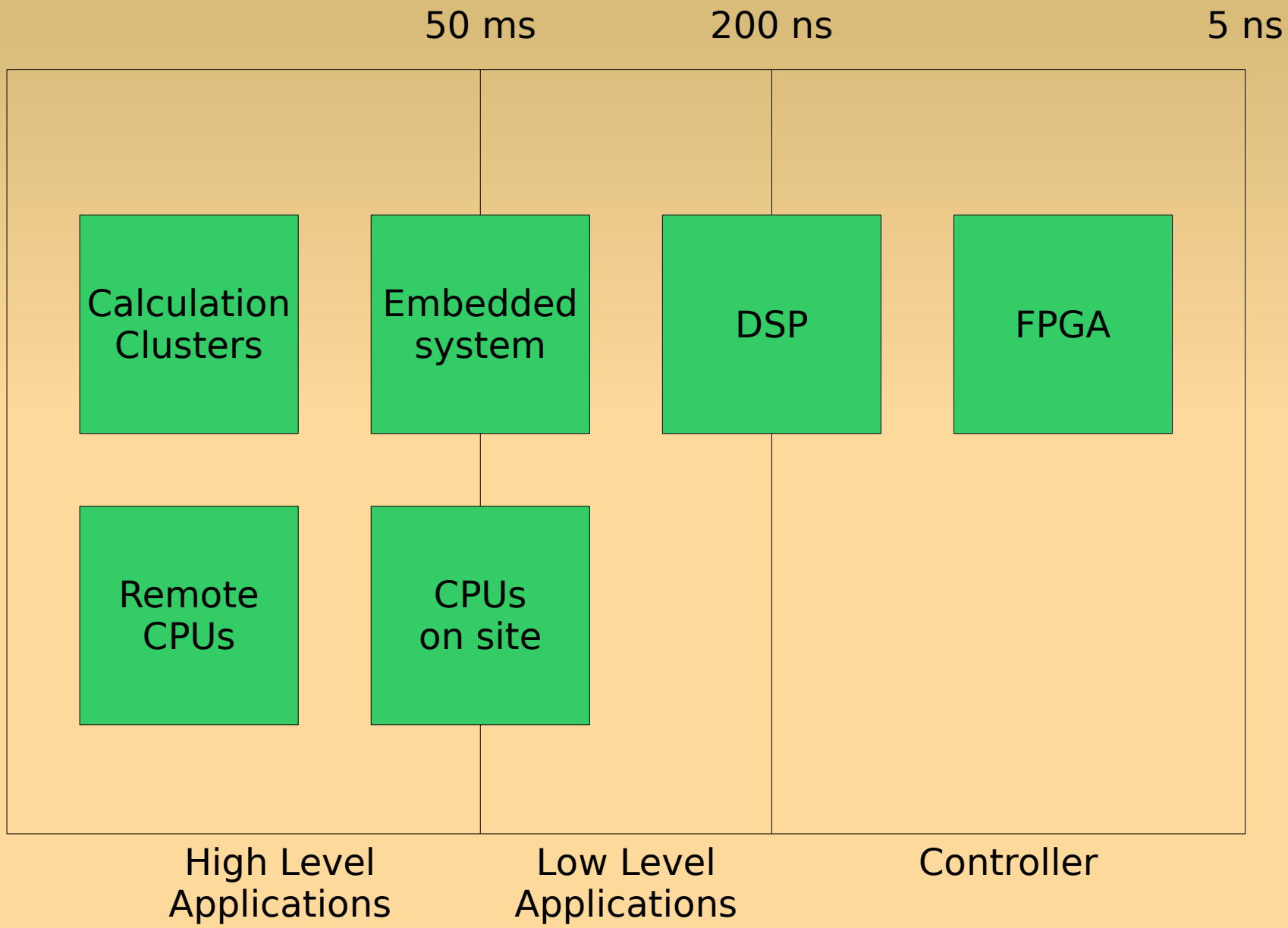

Wojciech Jalmuzna - wojciech.jalmuzna@desy.de
Tomasz Jezynski - tomasz.jezynski@desy.de

Controller

The controller is the only element of the system, which has direct influence on the RF station.

The main task of this application is to control vector sum of the cavities with a given precision.

To achieve that, its reaction time must be as short as possible.

Moreover it provides interfaces for other software components giving them possibility to change the RF field parameters.

Wojciech Jalmuzna - wojciech.jalmuzna@desy.de
Tomasz Jezynski - tomasz.jezynski@desy.de

Controller(2)

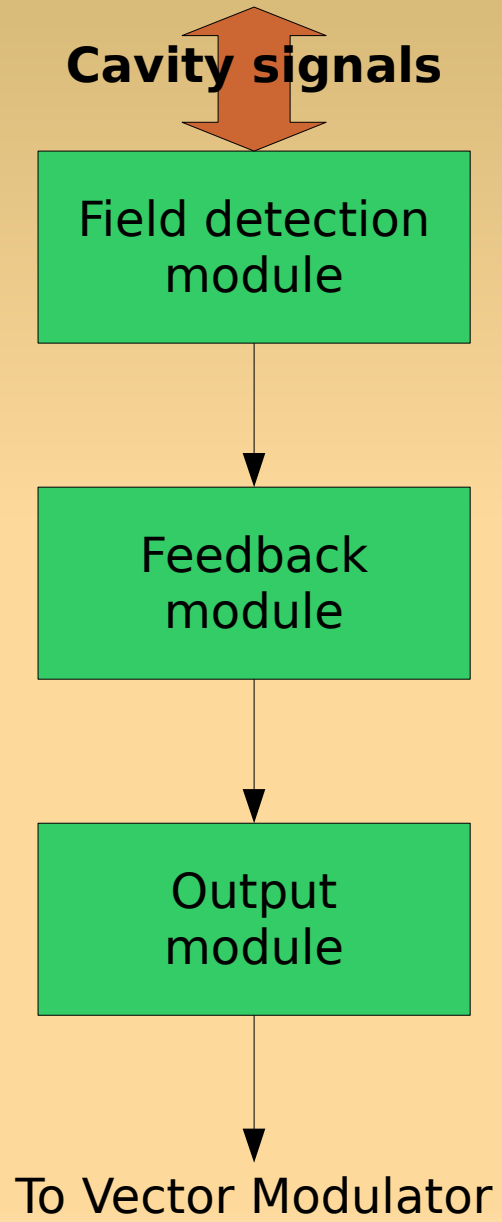

Computation Pipe of the controller

- detection of the components of the field
  - I-Q
  - Amplitude, Phase

- parametrized control function
  - P-I-D
  - MIMO

- output corrections
  - klystron chain linearization
  - beam load compensation
  - etc.

Wojciech Jalmuzna - wojciech.jalmuzna@desy.de
Tomasz Jezynski - tomasz.jezynski@desy.de

Controller(3)

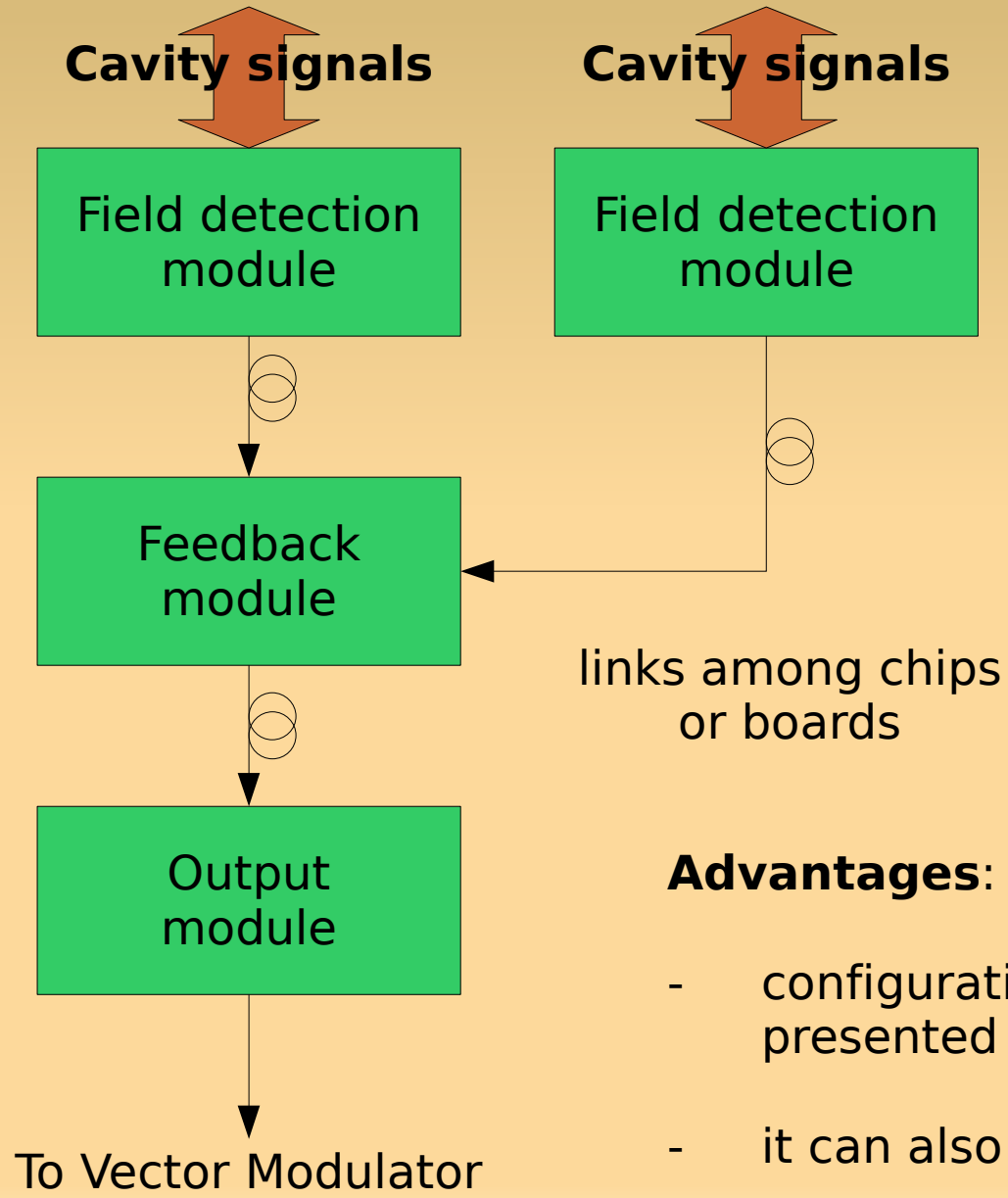

Other subsystem (DAQ, etc.) can be connected either as local or remote components

Advantages:

- configuration fits to the distributed system presented before
- it can also be used for centralized system

Wojciech Jalmuzna - wojciech.jalmuzna@desy.de
Tomasz Jezynski - tomasz.jezynski@desy.de

Controller(4)
supported features

Normal mode:
- I-Q field detection
- A-Q field detection
- Adaptive Feedforward
- klystron linearization
- beam load compensation
- embedded platform integration
- DSP processor support

The prototype version of the FPGA based controller have been permanently installed in ACC1 and is working more than 1 year

Measurement mode:
- Self Excited Loop (SEL) with output amplitude limiter and amplitude feedback
- frequency sweep mode

It is also possible to use CW mode.

Wojciech Jalmuzna - wojciech.jalmuzna@desy.de
Tomasz Jezynski - tomasz.jezynski@desy.de

Low Level Applications

This is the set of applications designed mostly to execute algorithms and measurements between pulses.

Parameters calculated during that time can be uploaded to the controller and used in the next pulse

It is also possible that this applications support controller during on-line operation.

In this case, only DSP processor can be considered – other elements of the system can not meet timing constraints

Wojciech Jalmuzna - wojciech.jalmuzna@desy.de
Tomasz Jezynski - tomasz.jezynski@desy.de

Low Level Applications(2)

This includes:

- Adaptive Feed-Forward
- System Identification
- Loop gain and loop phase calculation
- detuning and loaded Q calculation
- Vector sum calibration
- Beam Diagnostic
- Exception Detection and Handling

Wojciech Jalmuzna - wojciech.jalmuzna@desy.de
Tomasz Jezynski - tomasz.jezynski@desy.de

High Level Applications

This is the set of applications designed mostly to run in the background of working system with long execution intervals.

Parameters calculated by these algorithms are uploaded to the controller every few pulses.

The main execution platforms for these applications are control servers and computation cluster

Wojciech Jalmuzna - wojciech.jalmuzna@desy.de
Tomasz Jezynski - tomasz.jezynski@desy.de

High Level Applications(2)

This includes:

- Adaptive Feed-Forward
- Vector sum calibration
- Beam Diagnostic
- Automated frequency tuning
- Exception Detection and Handling
- RF-Gun control

Wojciech Jalmuzna - wojciech.jalmuzna@desy.de
Tomasz Jezynski - tomasz.jezynski@desy.de

Applications

The functionality of the low and high level applications overlaps.

So how can we know where to put given algorithm ?

It depends what are our timing constraints:
- if we want to execute given algorithm as fast as possible (during pulse or just between) it should be implemented as low level
- otherwise we implement it as high level

Wojciech Jalmuzna - wojciech.jalmuzna@desy.de
Tomasz Jezynski - tomasz.jezynski@desy.de

Communication Protocols

Low level protocols:
- Ethernet
- Gigabit Ethernet
- PCI Express

High level protocols:
- SOAP
- RPC/CORBA

Real time protocols:
- Low Latency Control Protocol
- FPGA-DSP protocol
- User defined protocols

Diagnostic protocols:
- JTAG
- IPMI
- Serial protocols

DOOCS based control system for LLRF

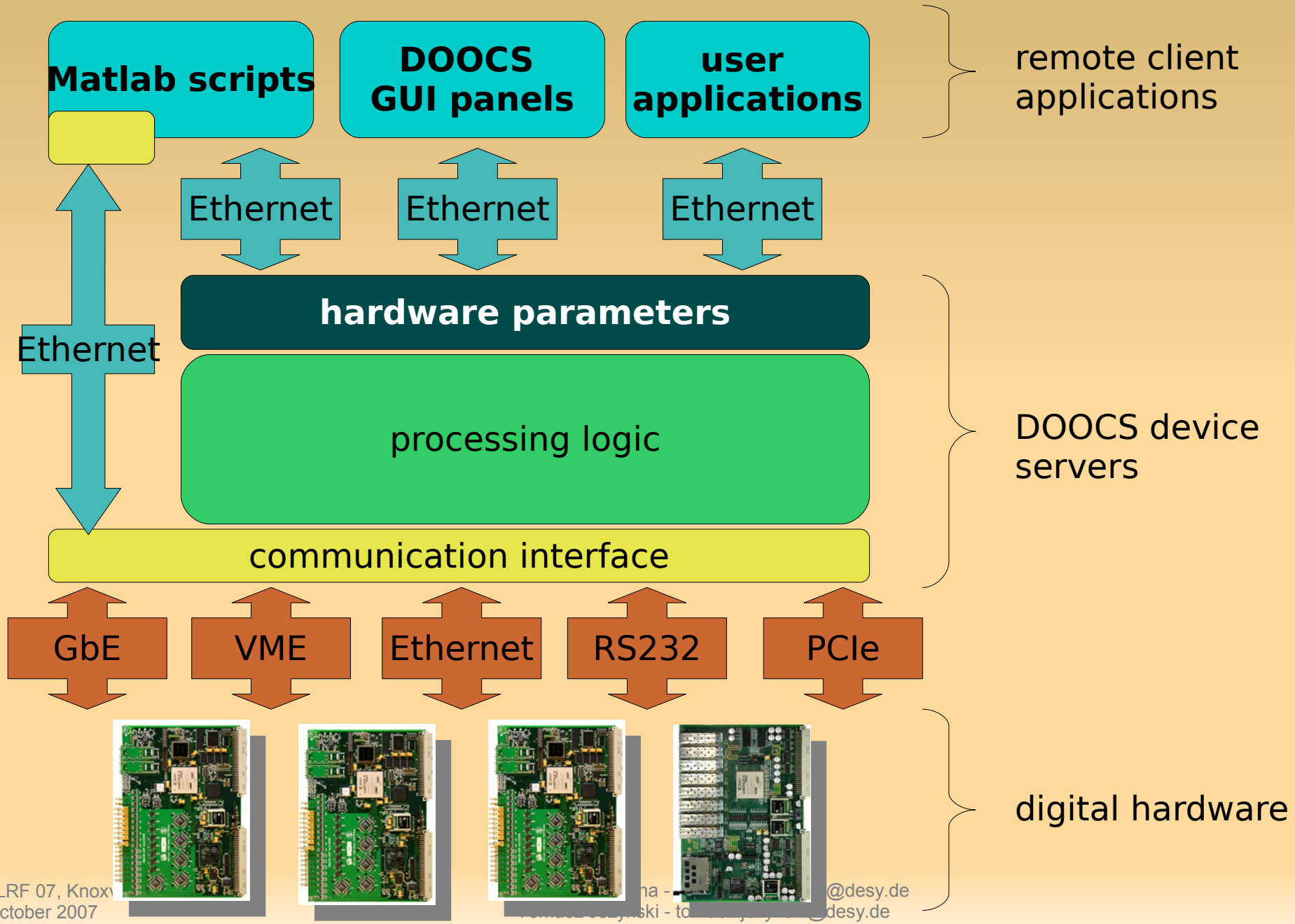

Tools, development, debugging

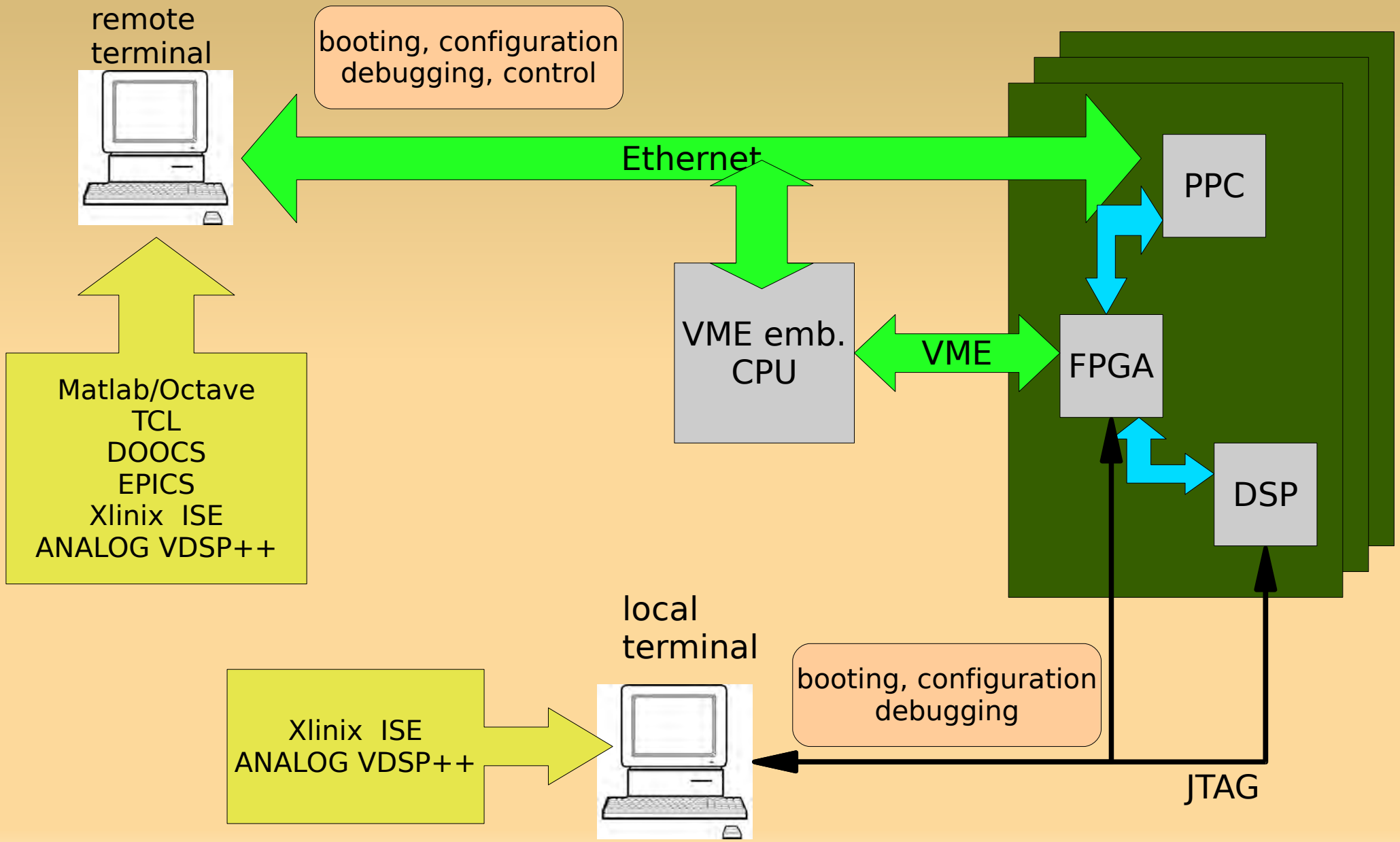

Wojciech Jalmuzna - wojciech.jalmuzna@desy.de
Tomasz Jezynski - tomasz.jezynski@desy.de

Automation

Ultimate role of the automation software:

- Maximization of the machine availability.
  - Automation of routine activities as startup, shutdown ...
  - Continuous monitoring of hardware's condition.
  - Human error minimalization.
  - Autorecovery from specific trips.
- Improvement of breakdown cause location.

Important software engineering challenges:

- Standardization of design, implementation and documentation of automation software for laser subsystem.
- Development of formal verification and testing procedures, thereby improvement of reliability, predictability and safety of the software.

Wojciech Jalmuzna - wojciech.jalmuzna@desy.de
Tomasz Jezynski - tomasz.jezynski@desy.de

Simulation

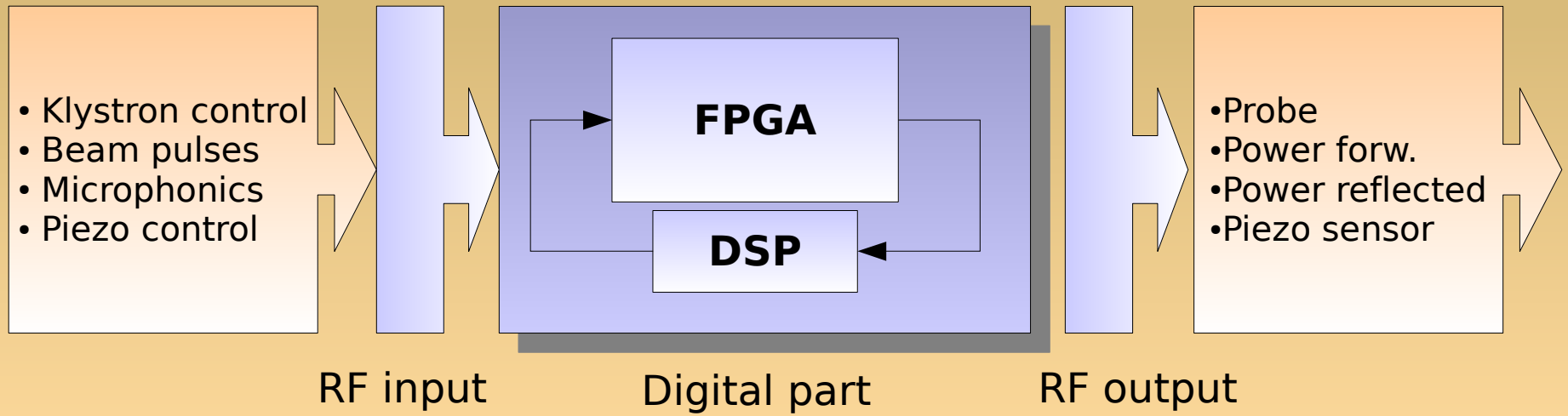

- RF input (1.3GHz)
- RF output (1.3GHz) for probe, forward and reflected power signal
- Real time operation
- Analog input for dedicated noise waveforms
- Analog input for beam signal
- Clock and trigger inputs for synchronization
- Multiple cavity simulation with independent parameters for each cavity
- 3 Mechanical modes and LFD for each cavity
- Thermal breakdown simulation (quenches)
- Klystron simulation (saturation, high voltage) Couplers (directivity)
- Waveguides
- Piezo sensor and actuator

Online simulation

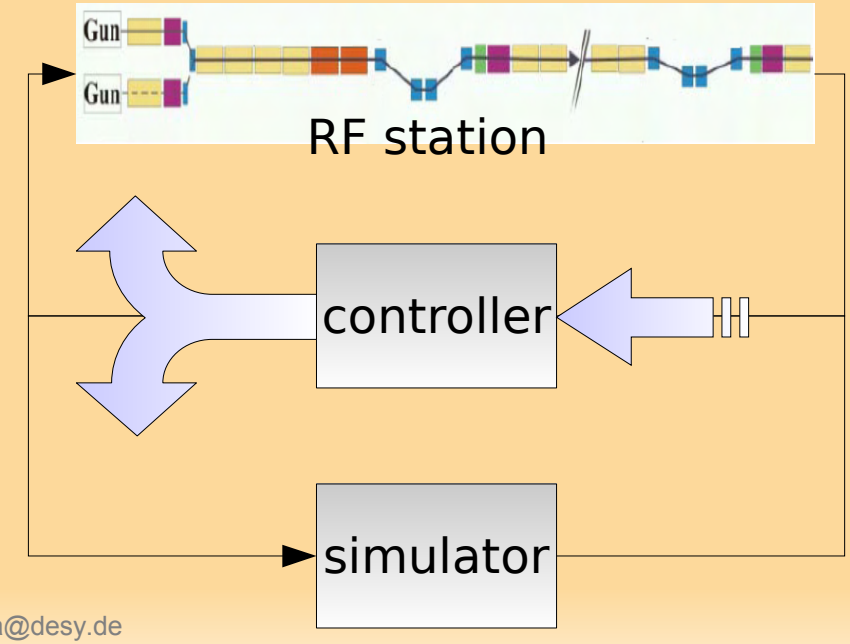

Wojciech Jalmuzna - wojciech.jalmuzna@desy.de
Tomasz Jezynski - tomasz.jezynski@desy.de

Thank you for your attention

Wojciech Jalmuzna - wojciech.jalmuzna@desy.de
Tomasz Jezynski - tomasz.jezynski@desy.de

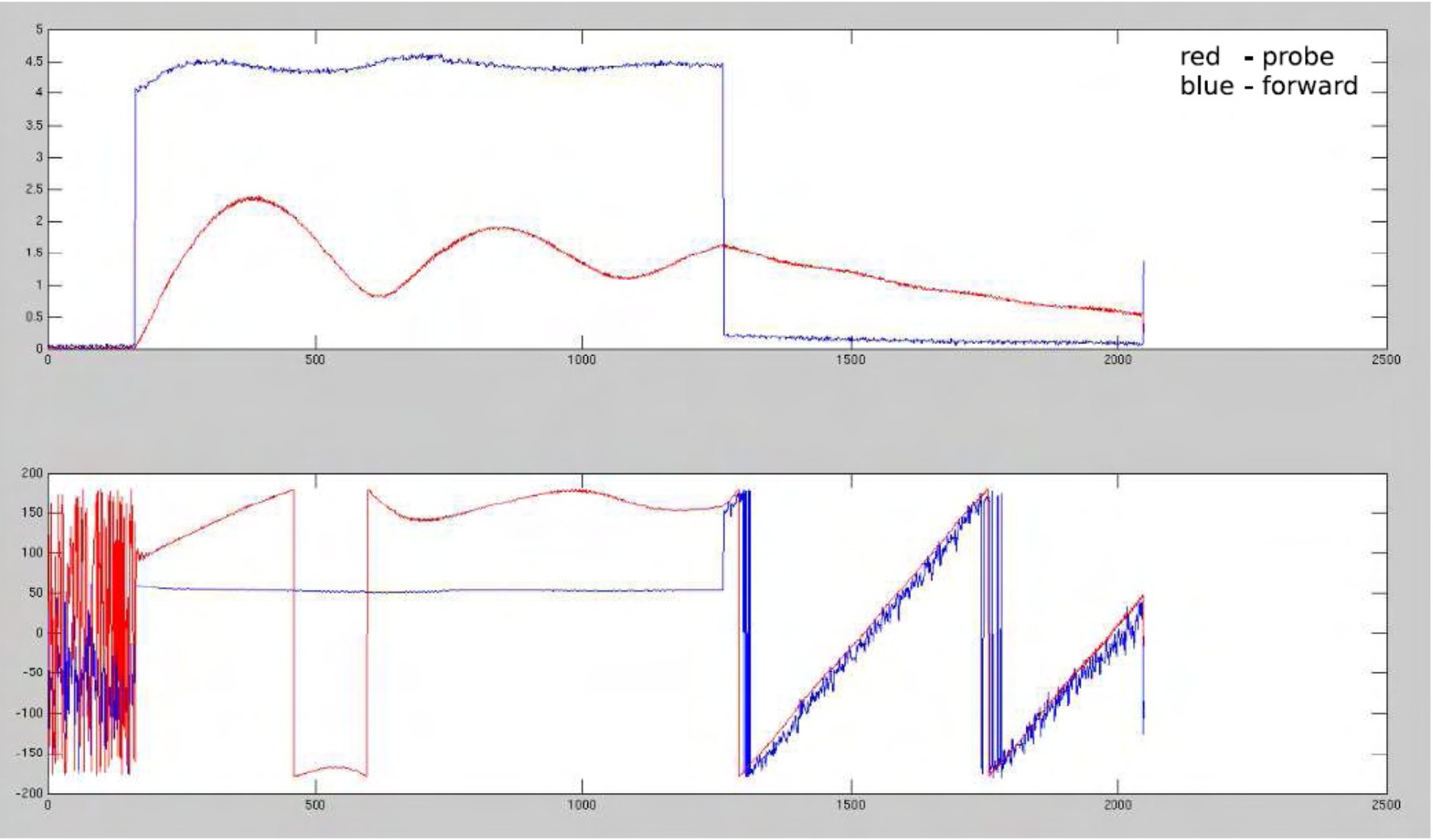

Wojciech Jalmuzna - wojciech.jalmuzna@desy.de
Tomasz Jezynski - tomasz.jezynski@desy.de

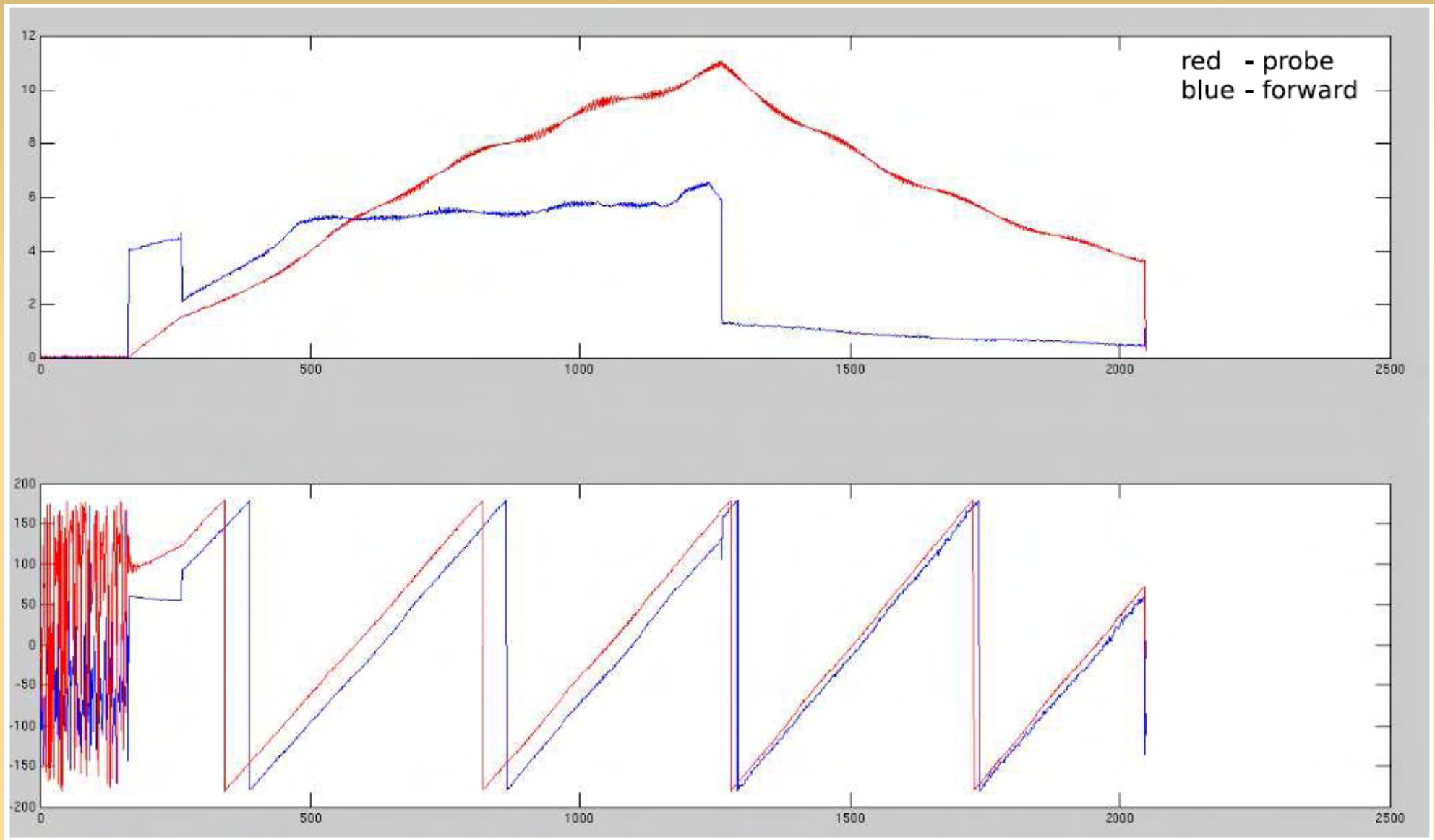

Wojciech Jalmuzna - wojciech.jalmuzna@desy.de
Tomasz Jezynski - tomasz.jezynski@desy.de

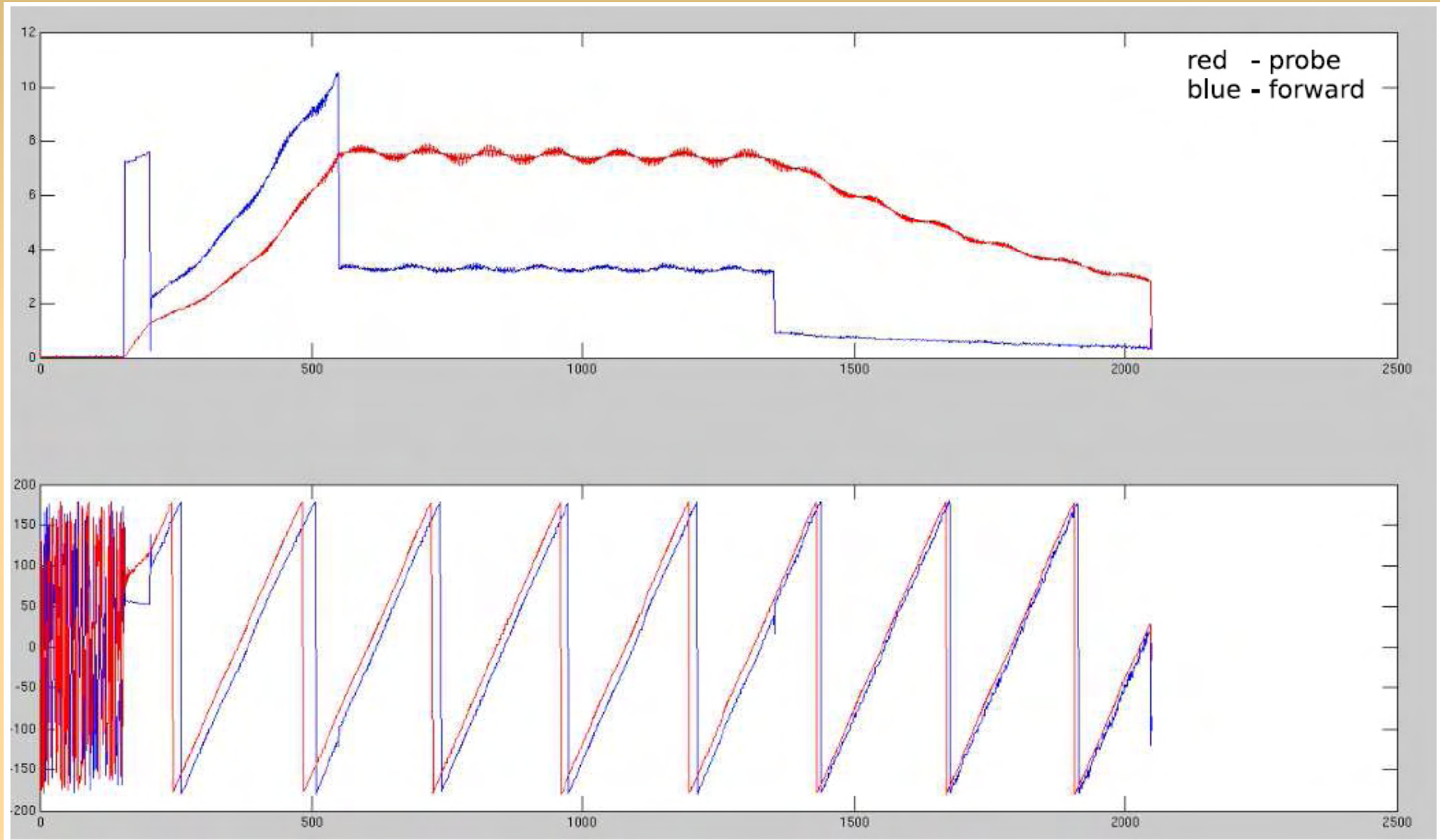

Wojciech Jalmuzna - wojciech.jalmuzna@desy.de
Tomasz Jezynski - tomasz.jezynski@desy.de