The Status of LLRF work at LANSCE

Mark Prokop
Los Alamos National Laboratory
Accelerator Operations and Technology Division
RF Engineering Group

21 October 2007

Overview

- LANSCE Facility and Systems
- LLRF Requirements
- LANSCE-R System
- Results and Status

LANSCE LLRF Team

- Sung-il Kwon
- Jerry Davis
- Steve Ruggles
- Philip Torrez

What is LANSCE?

- Los Alamos Neutron Science Center
- 800 MeV Proton Accelerator 1 MWatt beam 10% duty
- 7 Month Run Cycle 90% Availability
- 6 User Facilities operate simultaneously with interleaved beams
  - 2 Beam Species: H+, H-
  - Peak Currents from 0.1 to 21mA
  - 120 Hz
  - Simultaneous transport of both H+ and H- beams

LANSCE Facility

Ultra Cold Neutron (UCN) Area

RLW plant

Area A (inactive)

Used spare 1L target storage. Future MTS

Proton Radiography (pRad)

Cooling Towers

Side-coupled-cavity accelerator and equipment building (100-800 MeV)

Isotope Production Facility

Drift tube accelerator and equipment building (0.75-100 MeV)

Lujan Center

1L Target

WNR

Target 4

Target 2

Central Control Room

The LANSCE-R scope focuses on the core accelerator and excludes all experimental areas

Injector (0-0.75 MeV)

LANSCE

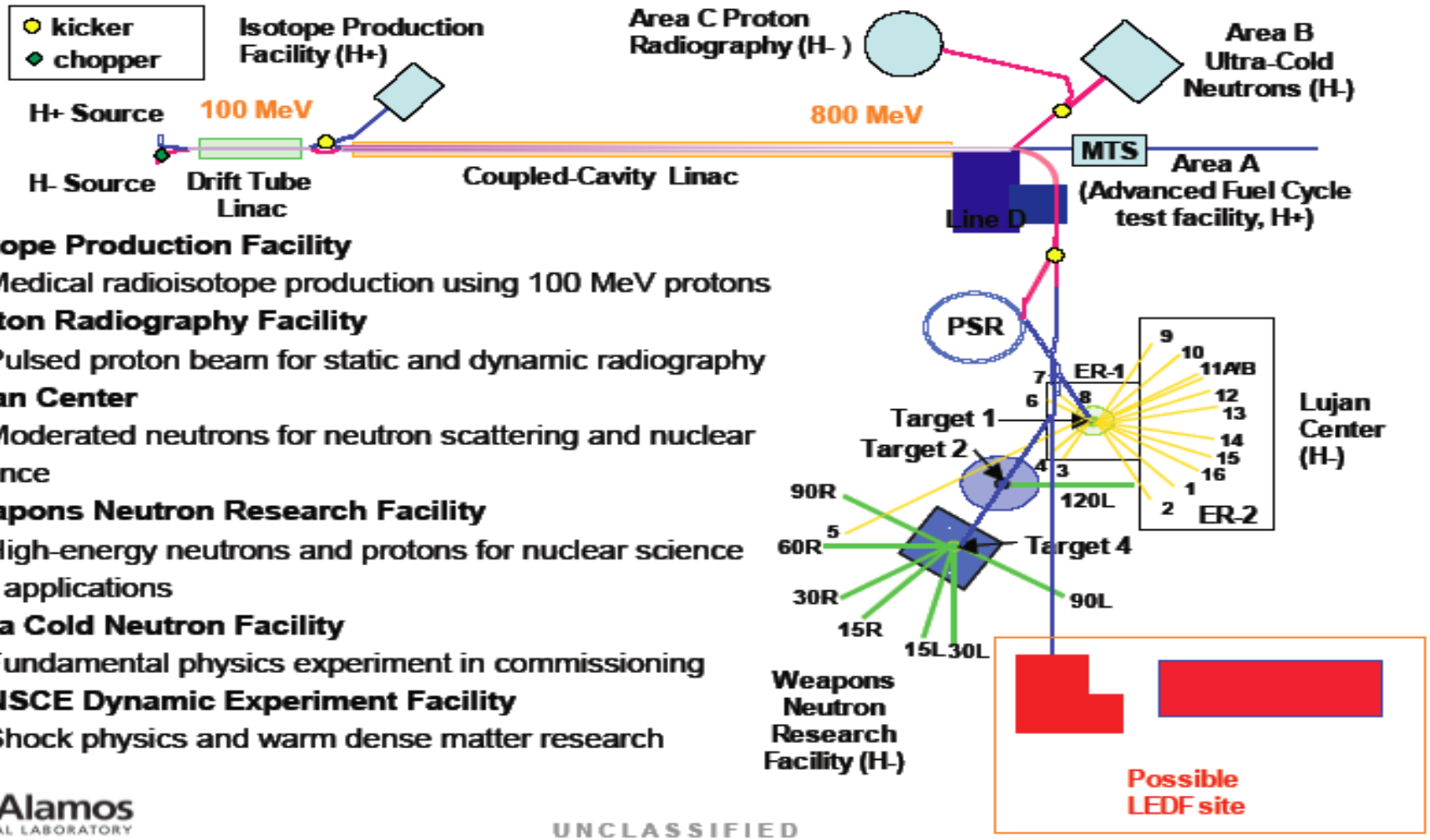

Isotope Production Facility

Medical radioisotope production using 100 MeV protons

Proton Radiography Facility

Pulsed proton beam for static and dynamic radiography

Lujan Center

Moderated neutrons for neutron scattering and nuclear science

Weapons Neutron Research Facility

High-energy neutrons and protons for nuclear science and applications

Ultra Cold Neutron Facility

Fundamental physics experiment in commissioning

LANSCE Dynamic Experiment Facility

Shock physics and warm dense matter research

Current LANSCE System

- 35+ years old
- Analog LLRF Control System
  - Video signal levels
  - Phase and amplitude controlled independently
  - All parameters for control system set via potentiometers (hand tuned)
  - Single set point for all beams
  - Beam Feed Forward (Toroid)
- Nonlinear control elements
  - PA modulator
  - CCL preamplifiers (Class C)
- LLRF Data only available locally on oscilloscopes

Future LANSCE Systems

- LANSCE-R upgrade
  - New RF Systems
  - Digital LLRF system
  - Integrated Resonance control
  - EPICS Accelerator Control System
  - FY09-FY14 Installation
  - $160 Million
- New Facilities
  - Materials Test Stand (MTS) Start FY12
  - Matter Radiation Interactions and Extremes (MaRIE) FY15

LINAC Pulse Characteristics by Experiment Area

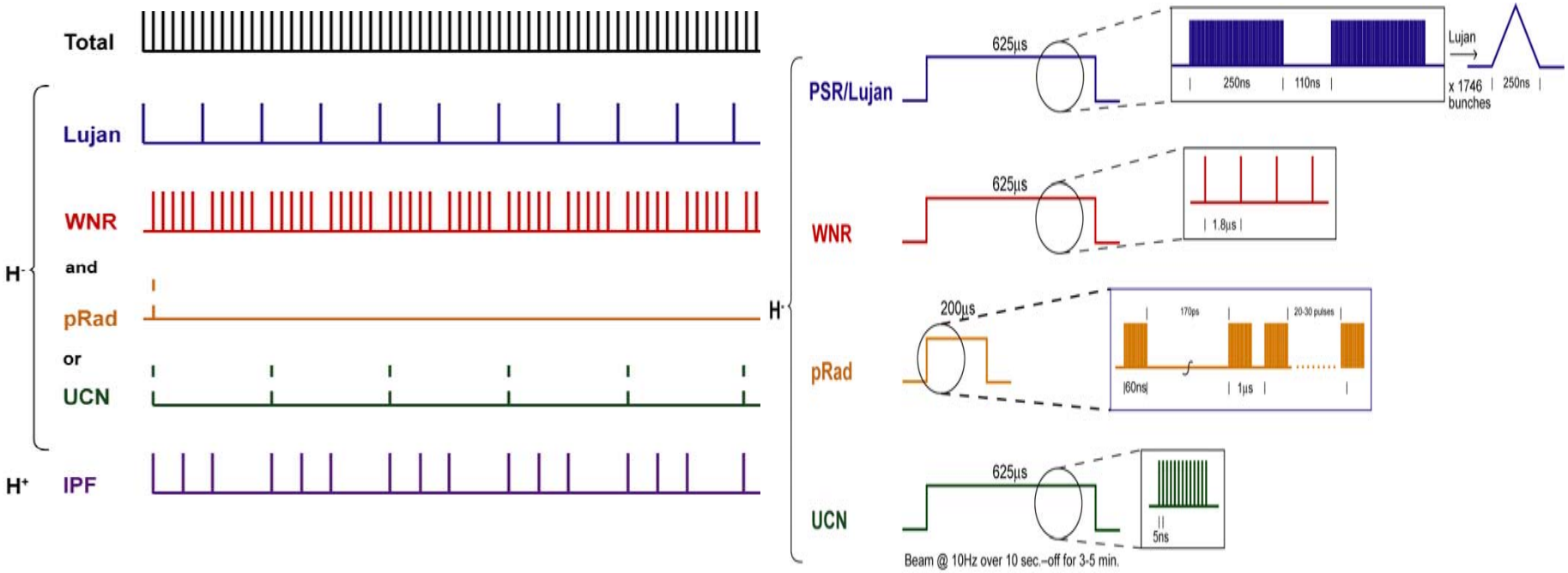

Super Pulse (1 Hz)

1	Lujan	WNR	WNR	WNR/IPF	WNR	UCN	Lujan. . .
2	Lujan	WNR	PRAD	WNR/IPF	WNR	WNR	Lujan. . .

…

⋮

Beam Types at LANSCE

- Current

Beam Type	Species	Peak Current (mA)	Gate (μs)	Rep Rate (Hz)	Chopping
IPF	H+	10-16.5	625	10-25	No
Lujan	H-	11-12	625-775	20	2/3
PRad	H-	0.1	300	1	60 ns
WNR	H-	0.1	625	100	1.8 us
UCN	H-	11-12	625	10	No

- Proposed

Beam Type	Species	Peak Current (mA)	Gate (μs)	Rep Rate (Hz)	Chopping
MTS	H+	16.5	625	60-90	No
MTS-R	H+	16.5	625	100	No
MTS-R+	H+	21	625-1250	100	No
PSR/WNR	H-	3-4	625	40	1.8 us

LANSCE Overview

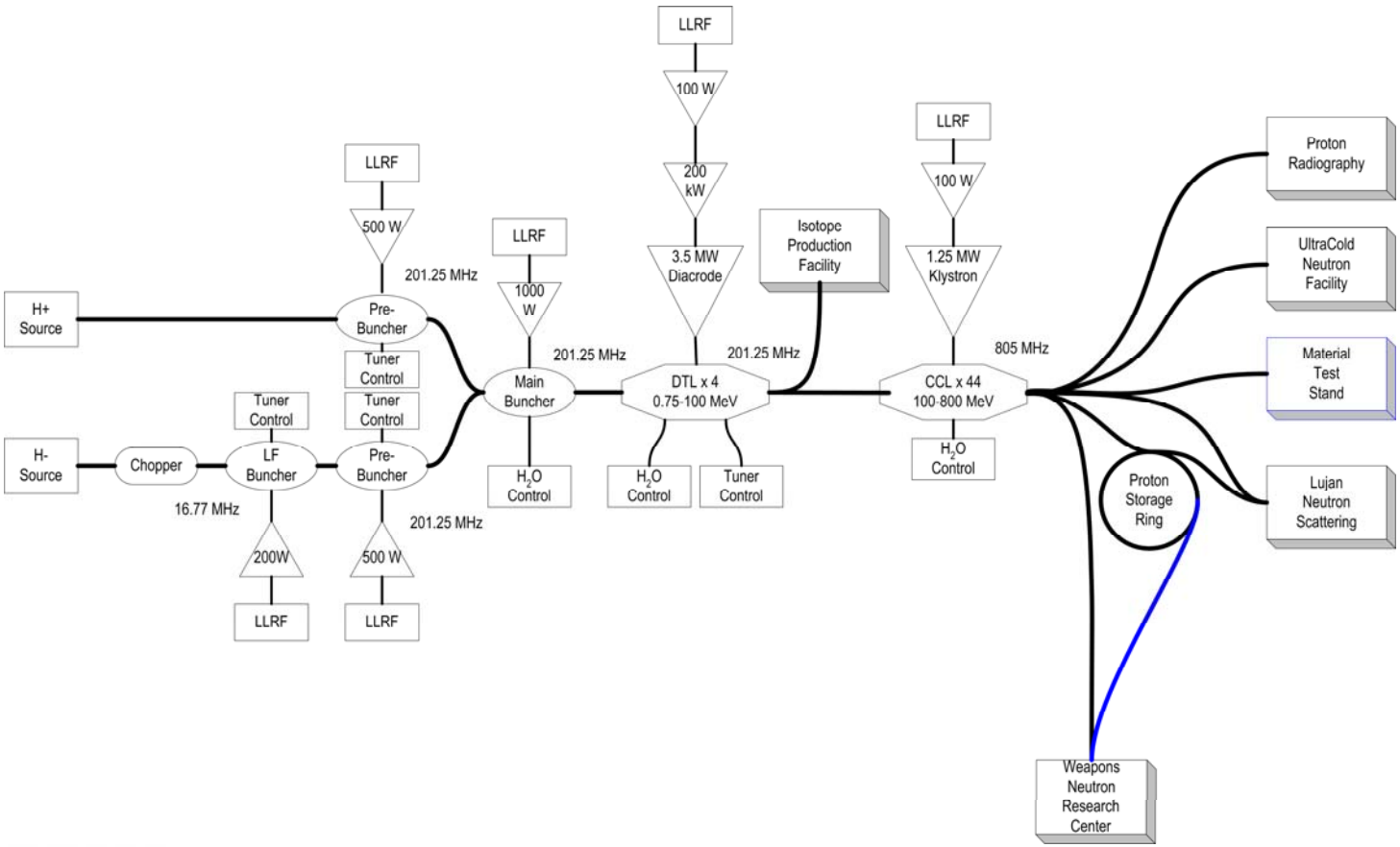

System Performance for LANSCE and LANSCE-R

Parameter	LANSCE	LANSCE-R
Peak Amplitude Errors	±1.00%	±0.1%
Steady-state Amplitude Errors	±0.2%	±0.05%
Peak Phase Errors	±1.5°	±0.2°
Steady-state Phase Errors	±0.5°	±0.1°
Peak DTL Resonance Error	±3 kHz	±300 Hz
Peak CCL Resonance Error	±10 kHz	±1 kHz

Phase and Amplitude Control

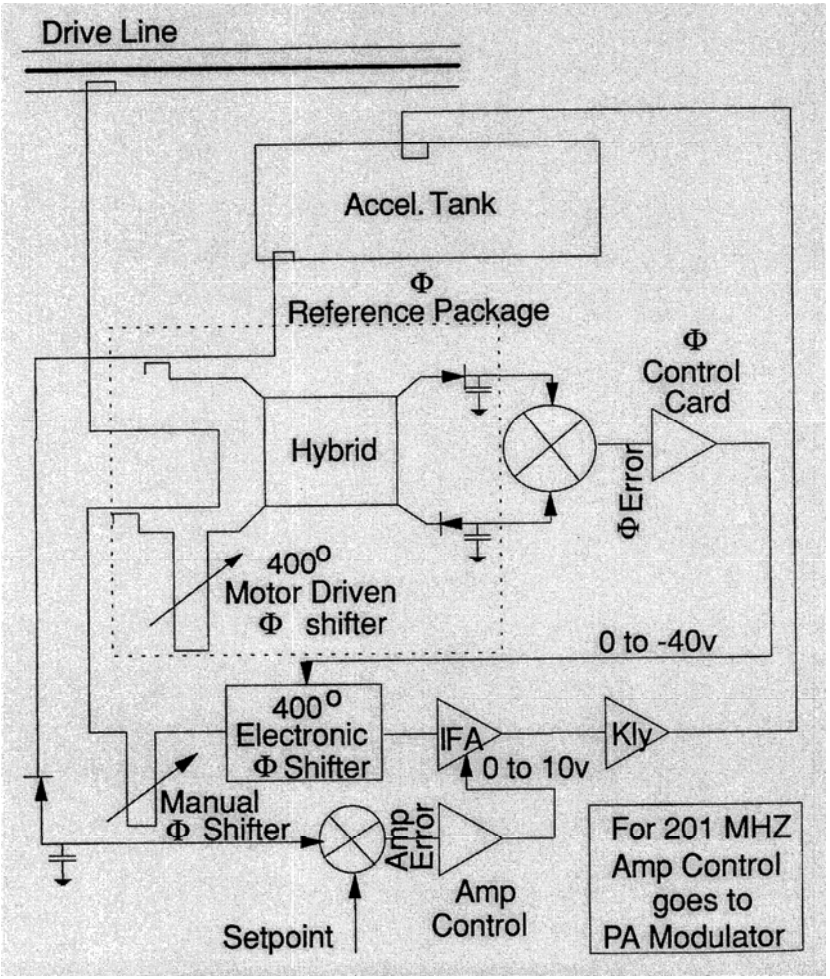

LANSCE LLRF Features

- Video Signal levels
- Op Amp-based PI Controller plus feed forward input
- Independent phase and amplitude controllers
- Mechanical Phase shifter reliability
- Electronic Phase shifter signal levels 0-40 Volts (400° range)

LANSCE :Field Amplitude and Phase Control Cards

- Each PC Board has Single Setting Proportional/Integral/Derivative (PID) Gains
- Cannot Accommodate Multiple Beams and Currents Without Compromise
- Obsolete Components
- Drifting and Offsets Must be Continually Checked, Components Failing
- Require Skilled Technicians to “Tune” the Loops When Beam Changes
- Limited Dynamic Range of Control
- Oscillation Frequent - Which can Destroy FPA, Cause Arcs at Window and DTL

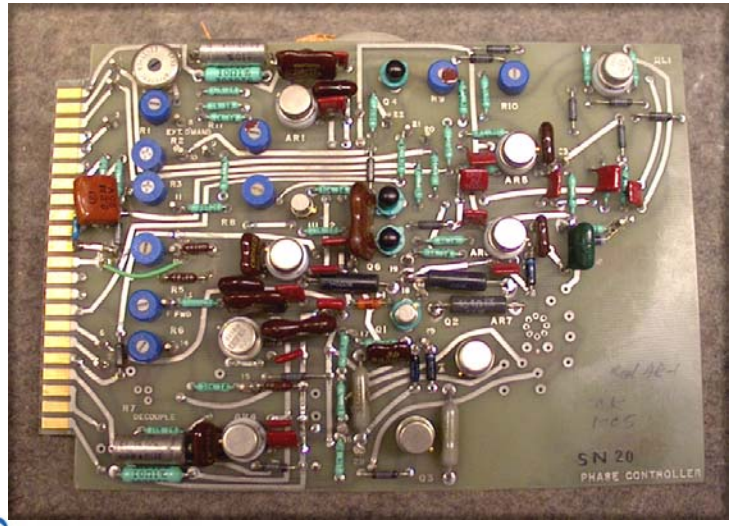

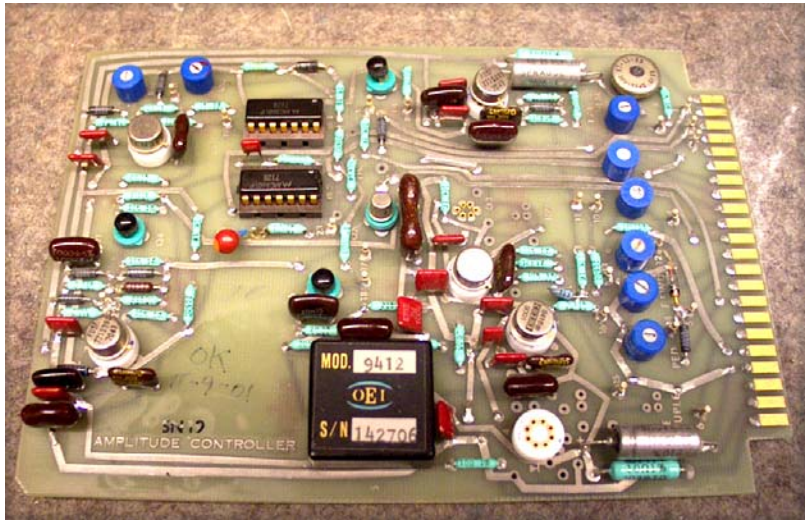

LLRF Performance

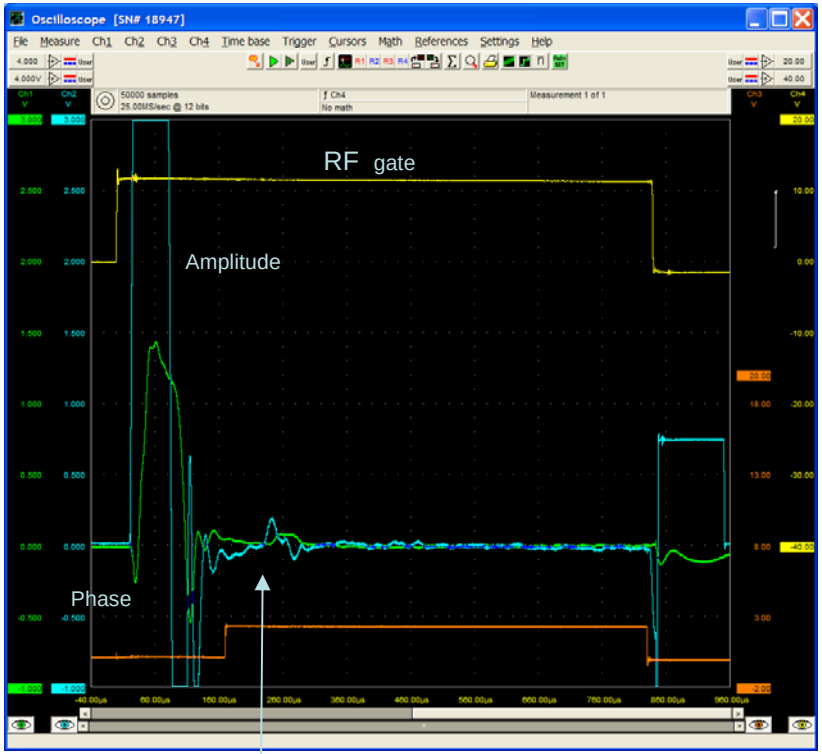

Module 1

Beam on

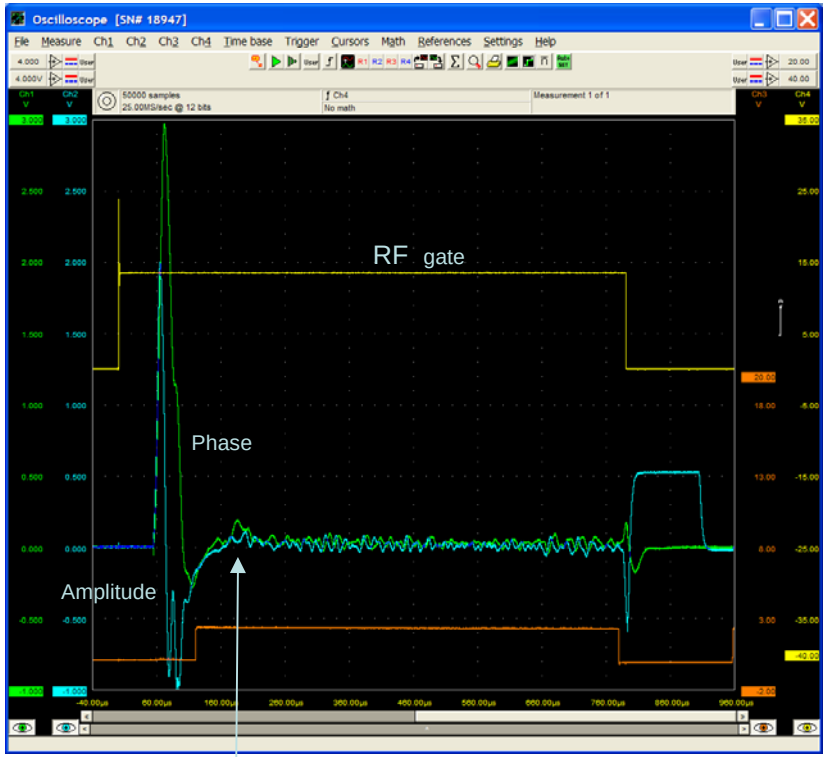

Beam on

Module 40

LLRF issues

- Beam quality due to beam loading transient in DTL 1 (no feed forward)
- Cavity fill time for DTL > 200 microsecond
- CCL Resonance Control requires up to one hour to recover from a fault
- Beam variations due to simultaneous transport of H+ and H-
- Feed forward phasing errors

LANSCE-R :Big Picture

- Replace Analog LLRF System Electronics of Sectors A-H with FPGA-DSP based Digital Electronics
- Replace Sector A 201.25 MHz system with new diacrode-based system
- Replace Current Klystrons from Sector B-E with High Efficiency Klystrons
- Replace Current Klystrons of Sector F-G with New Old Style Klystrons
- New High Voltage System for Sector B-H (Using LEDA Power Supply System)

LANSCE-R Systems

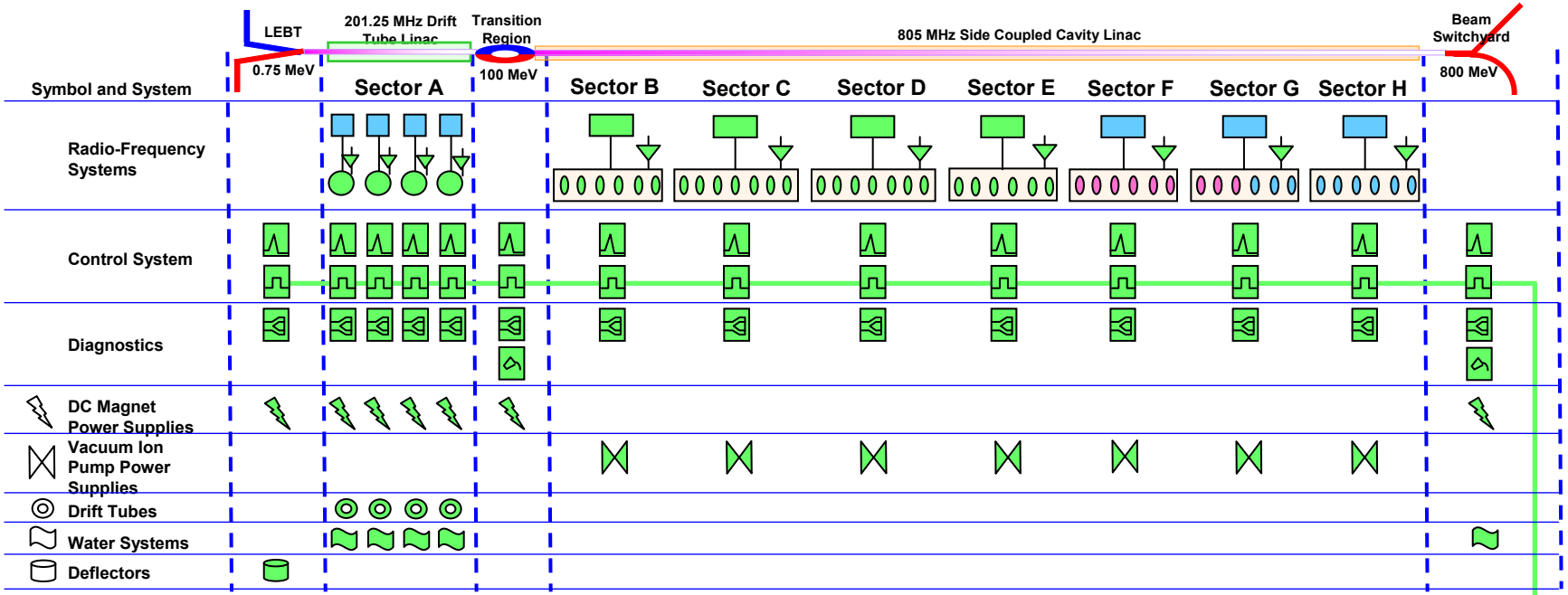

Control System and Diagnostics Legend

- RICE Timed and Untimed Data
- Master Timer System and Distribution
- Wire Scanners, Actuators and Beam Position Monitors
- Beam Loss Plug Watchers

Radio-Frequency System Legend

- New 201 MHz Amplifier
- New High Efficiency Klystron
- New Old Style Klystron
- No Change to Klystron
- New High Voltage System
- New Low Level RF Control System
- No Change to High Voltage System

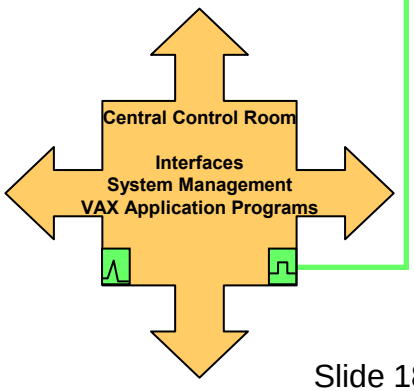

LANSCE-R System Block Diagram

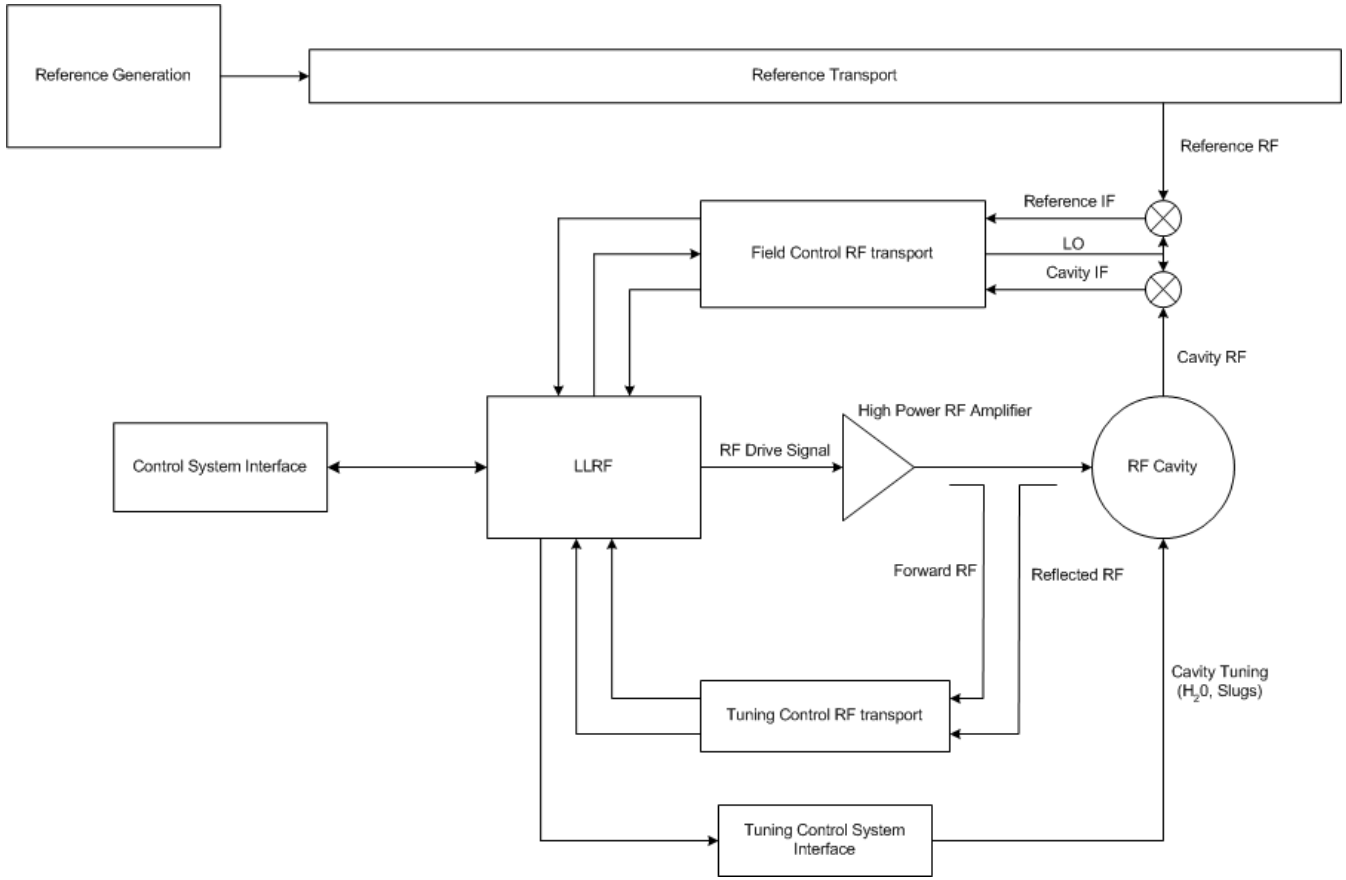

LANCSE-R Features

- Digital I-Q Controller
- Fully Adaptive Feed Forward ILC control for each beam type
- Frequency Agile resonance control system
- Pre-distortion controller for maximizing Power Amplifier output
- Gain Scheduling to minimize cavity fill time.
- LLRF Data available over EPICS
- Automated PI Controller gain setup

LANSCE-R LLRF Systems

- 16.67 MHz LF Buncher (1)
- 201.25 MHz Bunchers (3)
- 201.25 MHz DTL LLRF Systems (4)
- 805 MHz CL LLRF Systems (44)
- 201.25 MHz Master RF Reference System
- 805 MHz Master RF Reference System
- Frequency Generation (PSR, Chopper, Timing System)
- High power RF protection modules (all RF systems)

LANSCE-R :LLRF System

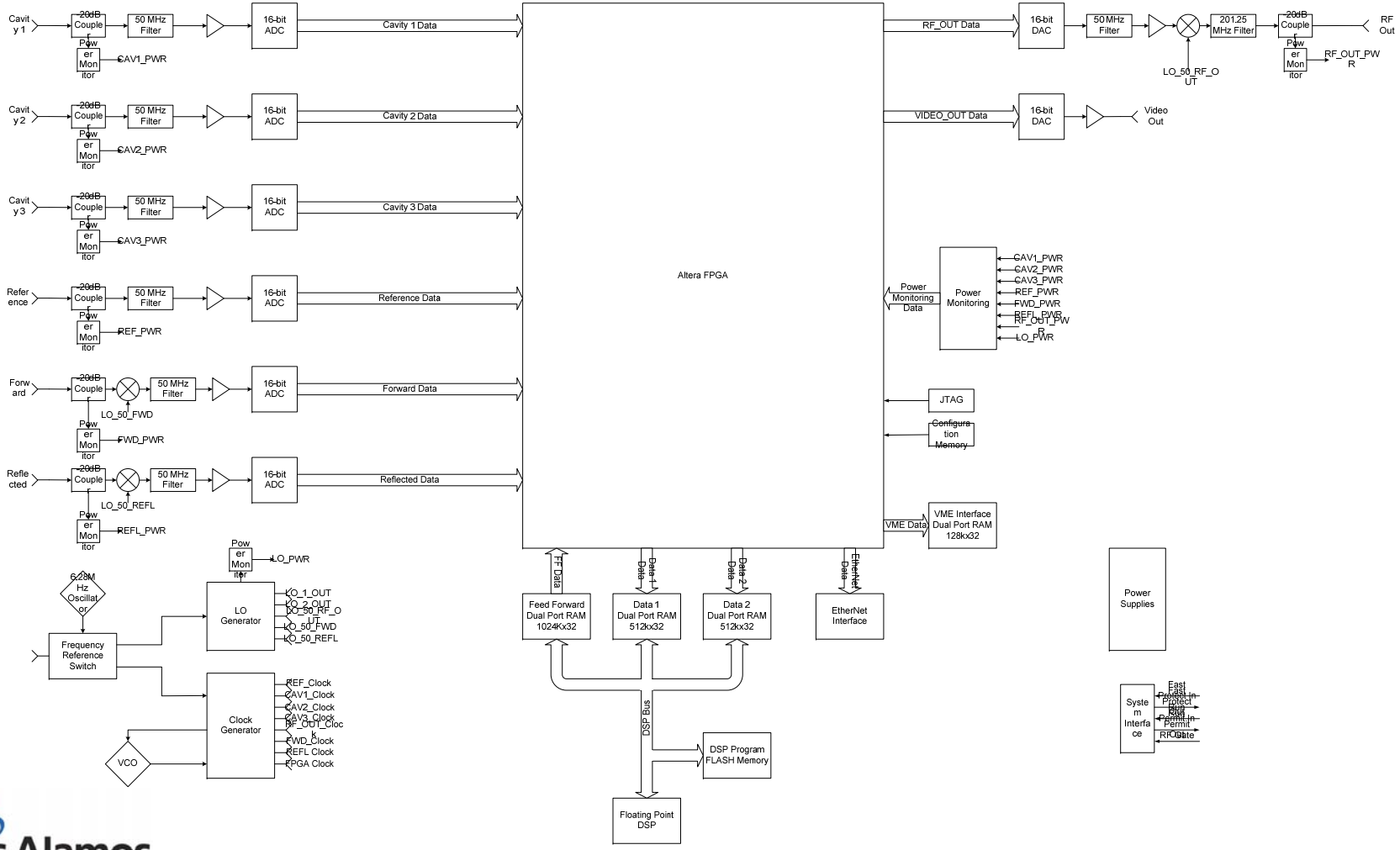

LANSCE-R LLRF Prototyping

- Oct 07 – Beam development time – Feedback Control, Parameter measurement
- Nov 07 – Beam development time- Feed Forward Control, Parameter measurement
- Jan 08 - Fabrication and bench testing of VME64-X–based prototype
- May 08 – Install VME64-X–based prototype into LANSCE

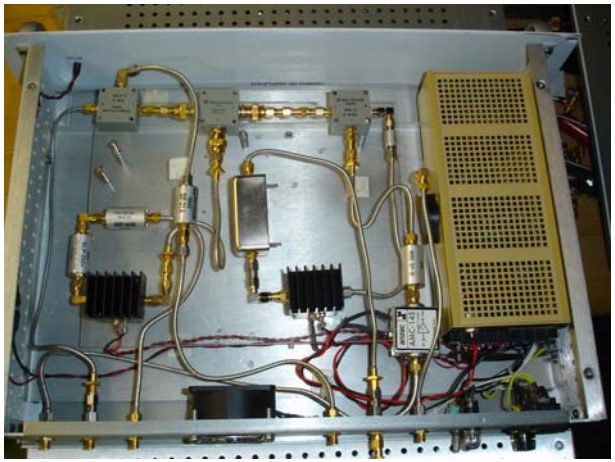

Prototype RF Chassis

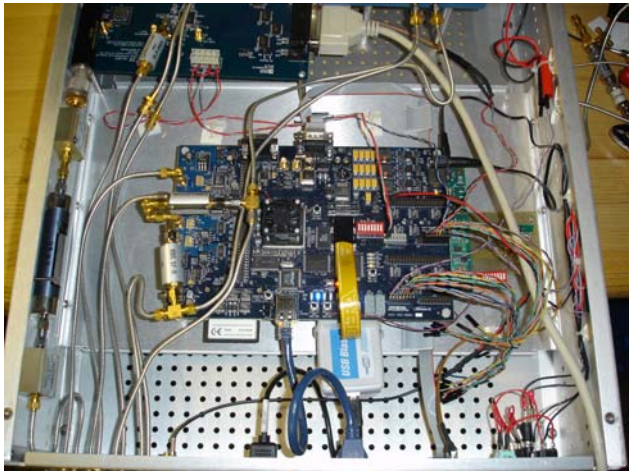

Prototype Signal Processing Chassis

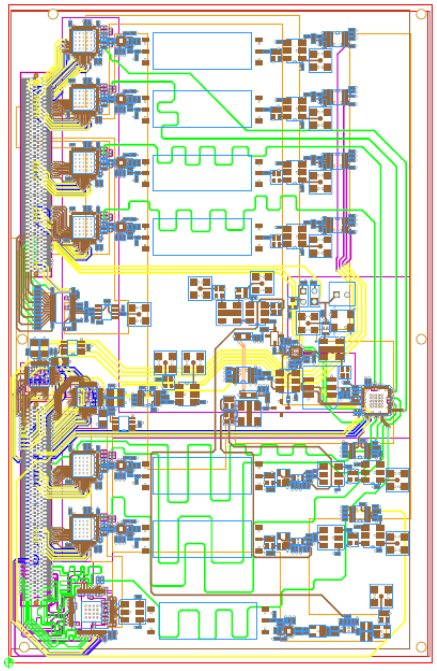

VME64-X Prototype

Gain Scheduling

- **Operating Point based Gain Scheduling Control, reducing the transient fatigue**

$$u(t)=u_o(r(t))+\left(K_p(r(t))+\frac{K_I(r(t))}{s}\right)(x-x_o(r(t)))$$

$$0 = Ax_o(r(t)) + Bu_o(r(t))$$

$$r(t) = Cx_o(r(t))$$

$$u_o(r(t)) = -B^{-1}AC^{-1}r(t)$$

$$x_o(r(t)) = C^{-1}r(t)$$

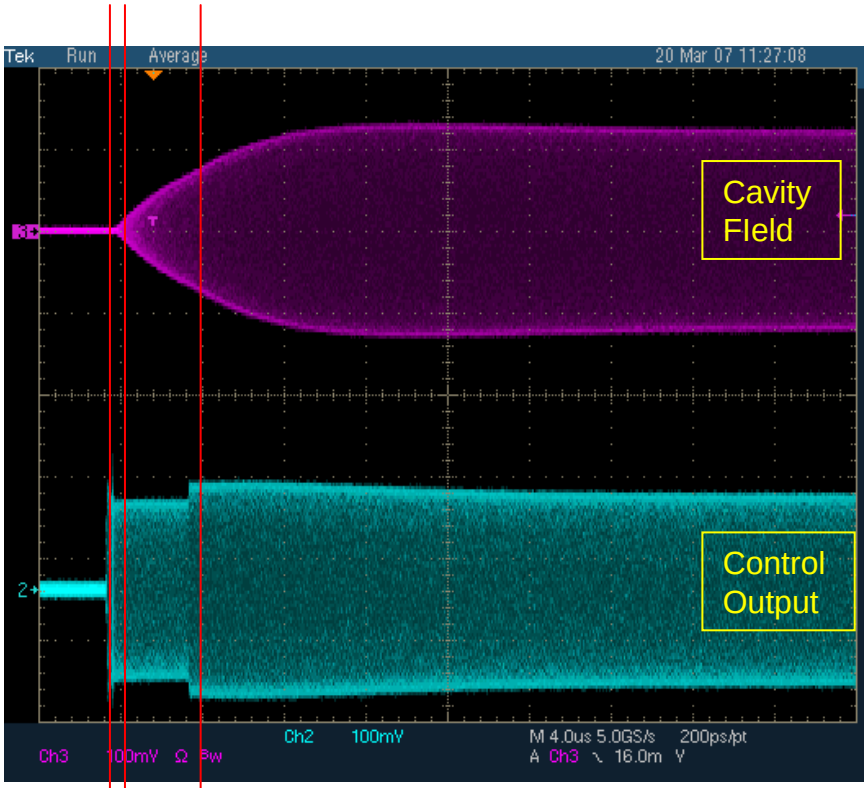

Delay is less than 1 μs

$K_P=0,\ K_i=0$

$K_P\neq 0$, or $K_i\neq 0$

Feed Forward Control – Iterative Learning Controller

$$U_F^{k+1} = Q\left(f \cdot U_F^k + \alpha \cdot LE^k\right)$$

Iterative Learning Controller

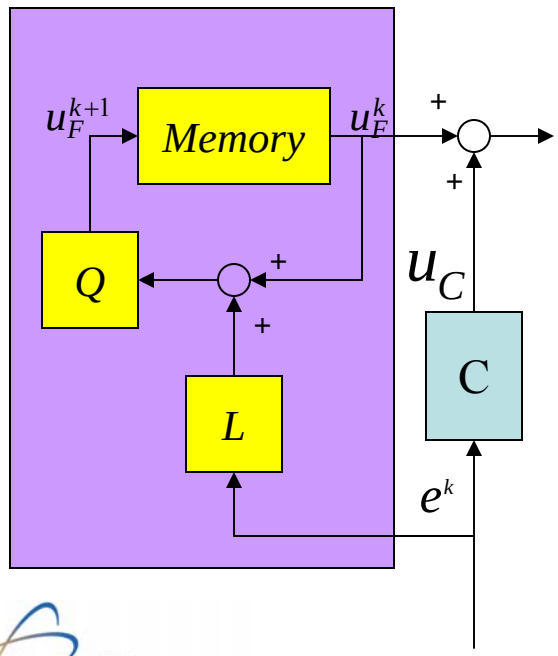

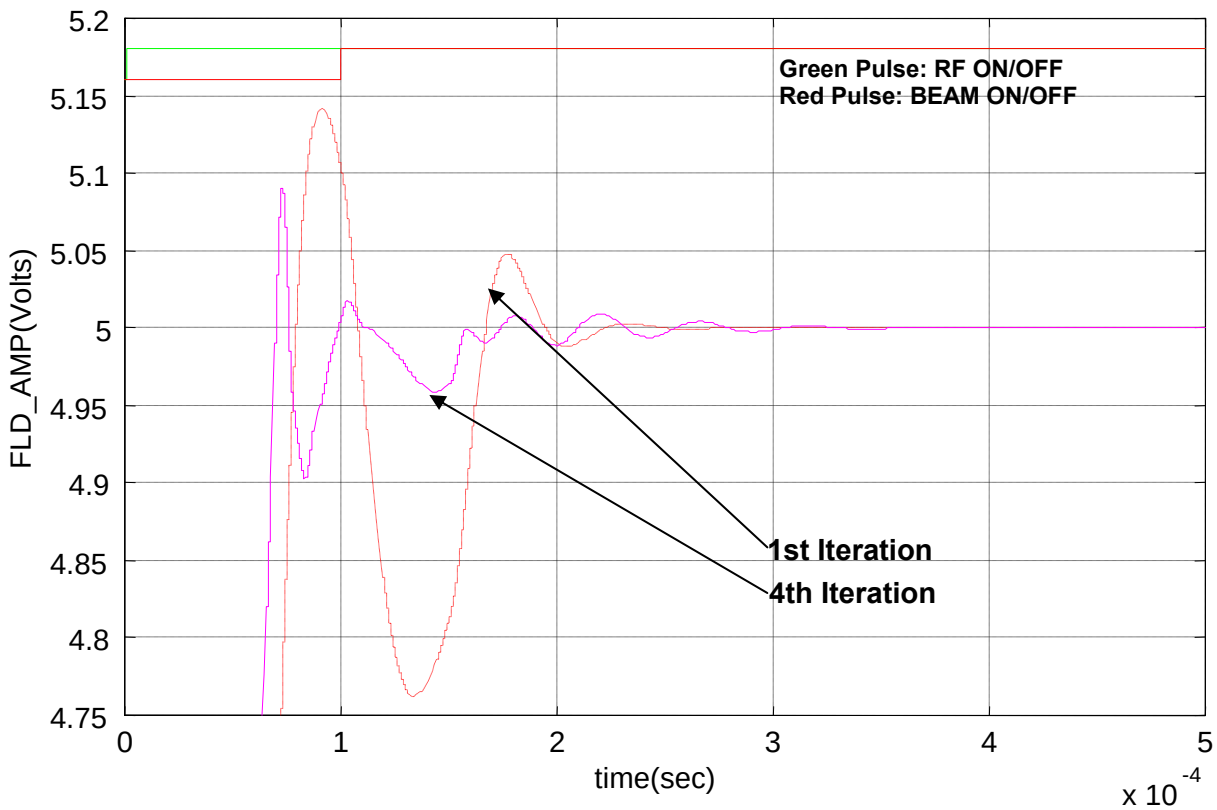

Predistortion

- The output of the amplifier has the characteristics of Nonlinearity (bottom plots)
- With Predistorter, the cascade system of predistorter, amplifier has the linear input-output characteristics as shown in the Modelsim Simulation Plot(Right Plot. Yellow: Input I, Red: Output I, Blue: Input Q, Magenta: Output Q)
- This predistorter improves the Power amplifier efficiency

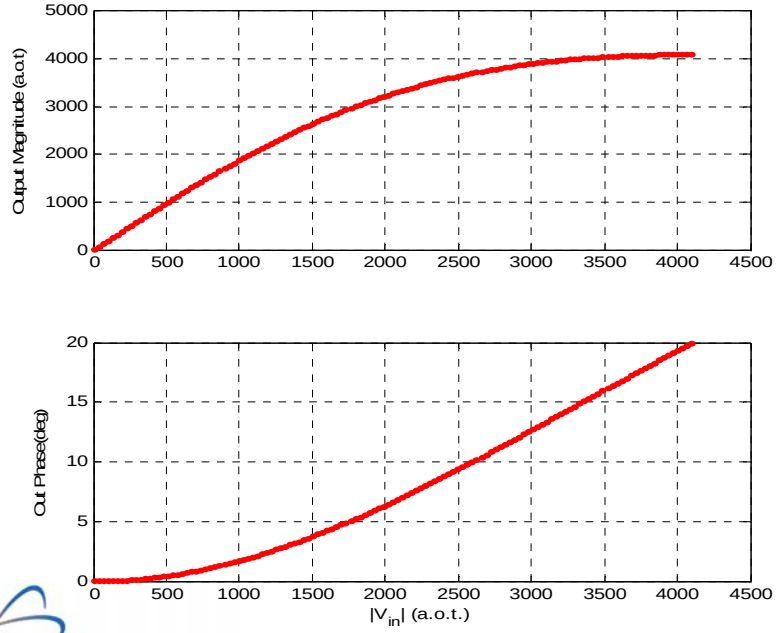

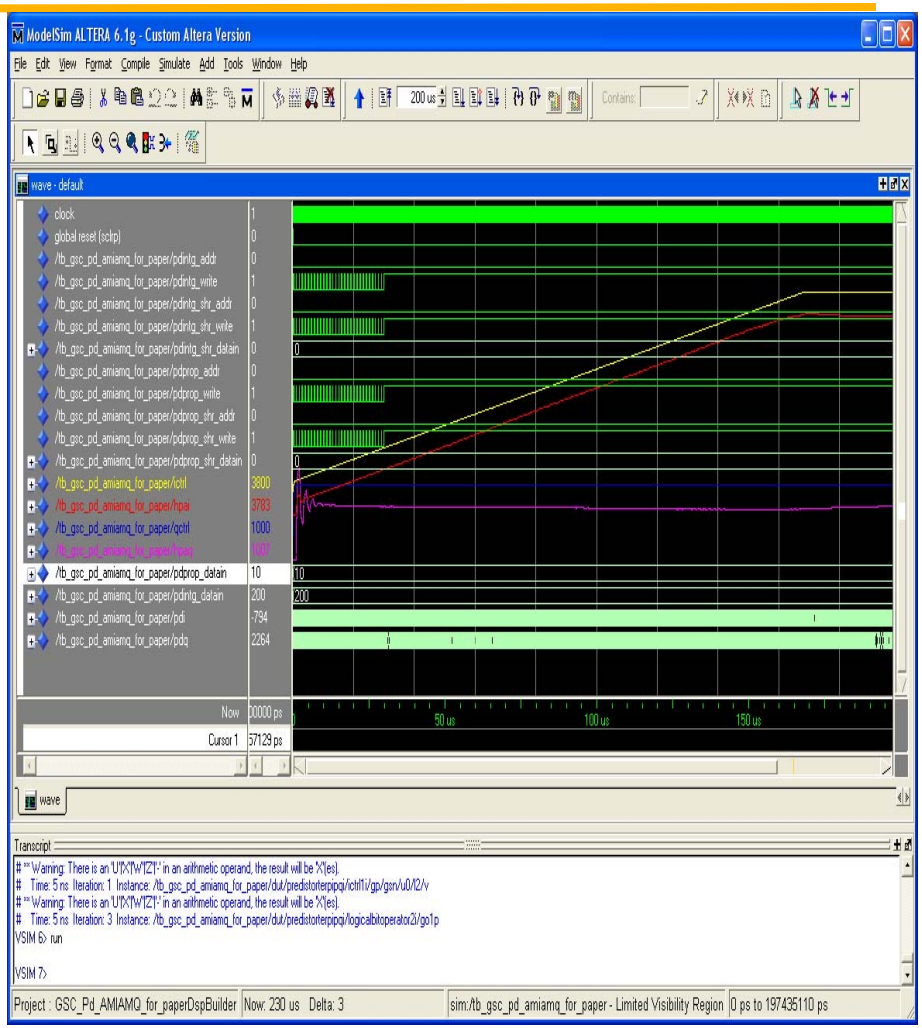

Conclusions

- Beam performance is optimized for each of the LANSCE experimental areas by customizing control parameters on a pulse-to pulse especially adaptive transient suppression (ILC-based feed forward control)
- RF system performance and output is optimized by applying pre-distortion control techniques
- Digital control system provides capability to dramatically improve efficiency and effectiveness of LANSCE beams

Summary

- LANSCE-R
  - Conceptual Design Report (Feb 08)
  - Engineering Design (FY09)
  - Installation (FY10-FY14)
- LLRF
  - Prototype Testing (Nov 07)
  - VME64-X prototype testing (FY08 run cycle)
  - High power protection module prototype (Sep 08)
  - RF Test Stands (201.25 MHz and 805 MHz) (Dec08)

Backup Material

LANSCE Overview

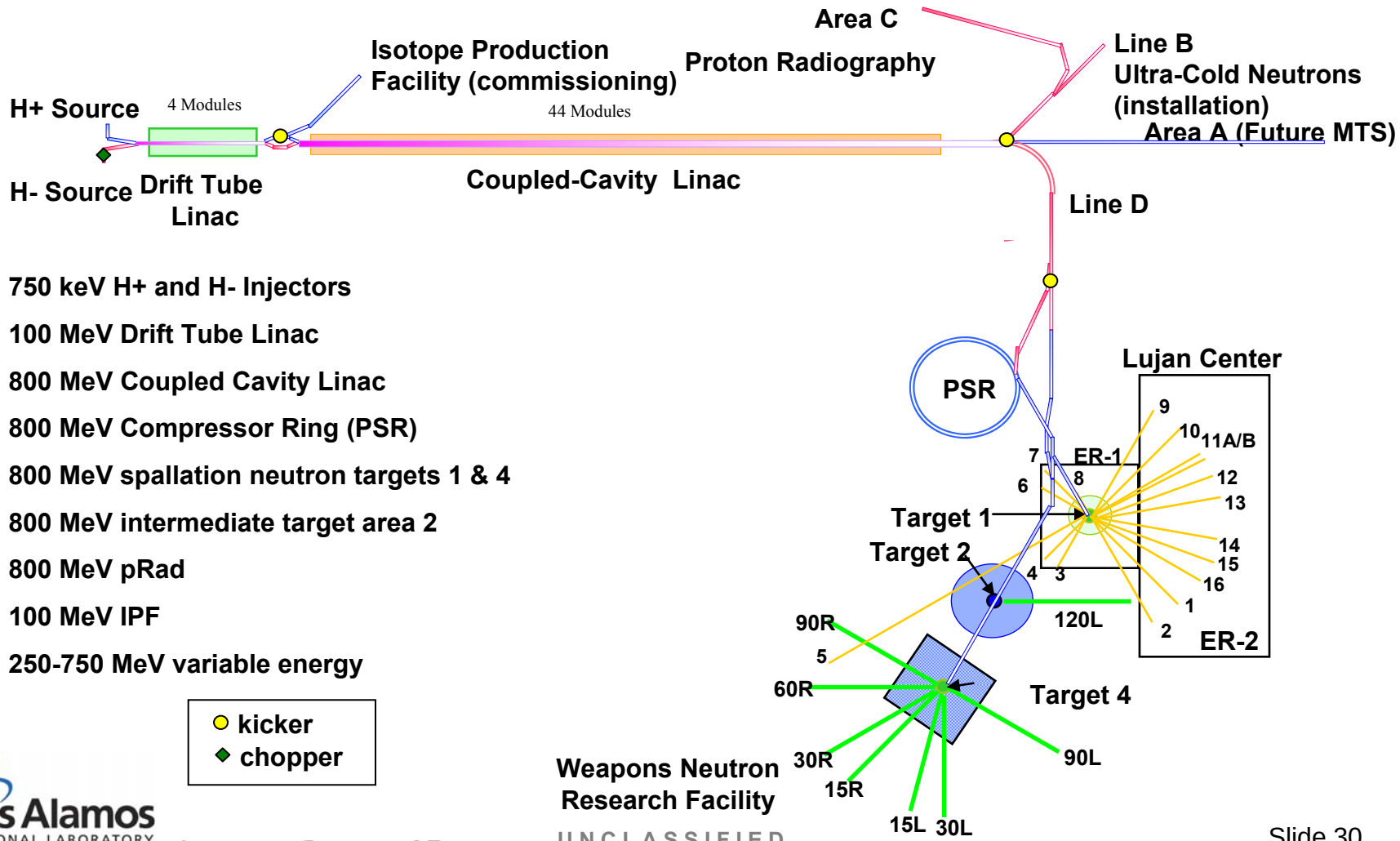

- 750 keV H+ and H- Injectors
- 100 MeV Drift Tube Linac
- 800 MeV Coupled Cavity Linac
- 800 MeV Compressor Ring (PSR)
- 800 MeV spallation neutron targets 1 & 4
- 800 MeV intermediate target area 2
- 800 MeV pRad
- 100 MeV IPF
- 250-750 MeV variable energy

Current RF system

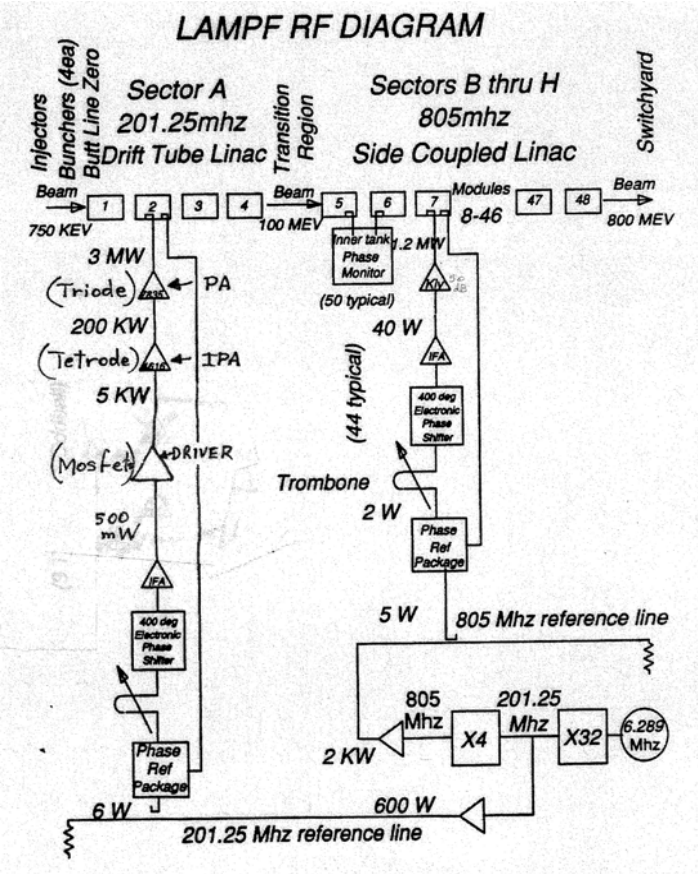

Receiver Architecture of the Current Prototype

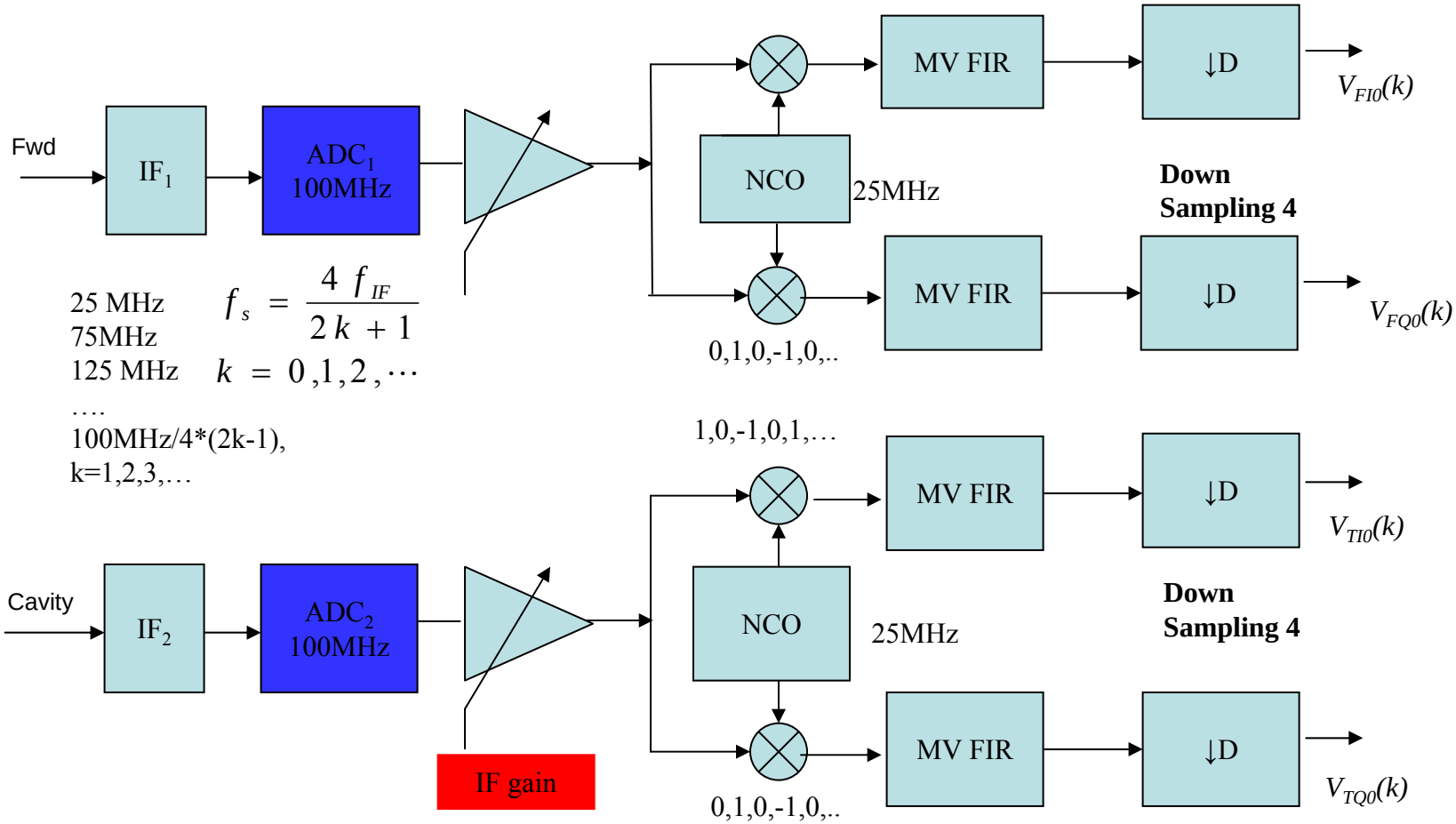

We can replace Moving Average Filter (MV Filter) with FIR FIR

Rotation Matrix for compensating the phase offset in the Loop

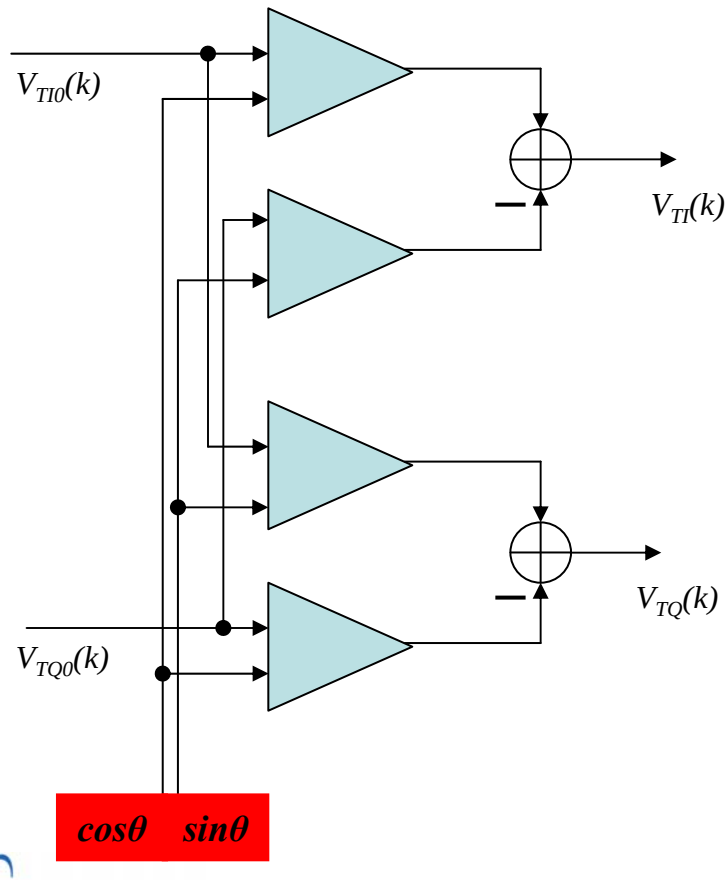

$$\begin{bmatrix} V_{TI} \\ V_{TQ} \end{bmatrix} = \begin{bmatrix} \cos\theta & -\sin\theta \\ \sin\theta & \cos\theta \end{bmatrix} \begin{bmatrix} V_{TI0} \\ V_{TQ0} \end{bmatrix}$$

Rotation Angle Calculation

- Two ways of the rotational angle calculation are considered
  - Uploading the raw open loop test I/Q data to the host computer or DSP processor and calculate the rotational matrix elements and download them to the NIOS II processor based Avalon Port Fabric
  - An amplitude/phase cordic (COordinate Rotation Digital Computer), a cos/sin cordic are implemented in the FPGA

Amplitude/Angle CORDIC, cos/sin CORDIC

$$x_{i+1} = x_i - \sigma_i 2^{-i} y_i$$
$$y_{i+1} = y_i + \sigma_i 2^{-i} x_i$$
$$z_{i+1} = z_i - \sigma_i \tan^{-1}(2^{-i})$$

- **Vectoring Mode**
  - **Rotate initial vector *(x_{in},y_{in})* until *y=0***

$$\sigma_i = \begin{cases} 1 & if \quad y_i < 0 \\ -1 & if \quad y_i \geq 0 \end{cases}$$

  - **Accumulate Rotaion Angle in z**
  - **The final values are**

$$x_f = K(x_{in}^2 + y_{in}^2)^{1/2}$$
$$y_f = 0$$
$$z_f = \tan^{-1}\left(\frac{y_{in}}{x_{in}}\right)$$
$$K = \sum_{i=0}^{\infty}(1+2^{-2i})^{1/2} \approx 1.6468$$

- **Rotating Mode**
  - **Rotate initial vector *(x_{in},y_{in})* by θ**
  - **Decompose the angle**

$$z_{i+1} = z_i - \sigma_i \tan^{-1}(2^{-i})$$
$$z_0 = \theta, x_0 = x_{in}, y_0 = y_{in}$$
$$\sigma_i = \begin{cases} -1 & if \quad z_i < 0 \\ 1 & if \quad z_i \geq 0 \end{cases}$$

  - **Perform microrotations**
  - **The final values are**

$$x_f = K(x_{in}\cos\theta - y_{in}\sin\theta)$$
$$y_f = K(x_{in}\sin\theta + y_{in}\cos\theta)$$
$$z_f = 0$$

  - **Cosθ, sinθ are when *x_{in}=1/K, y_{in}=0***

LANSCE-R: Feedback/Feedforward Control

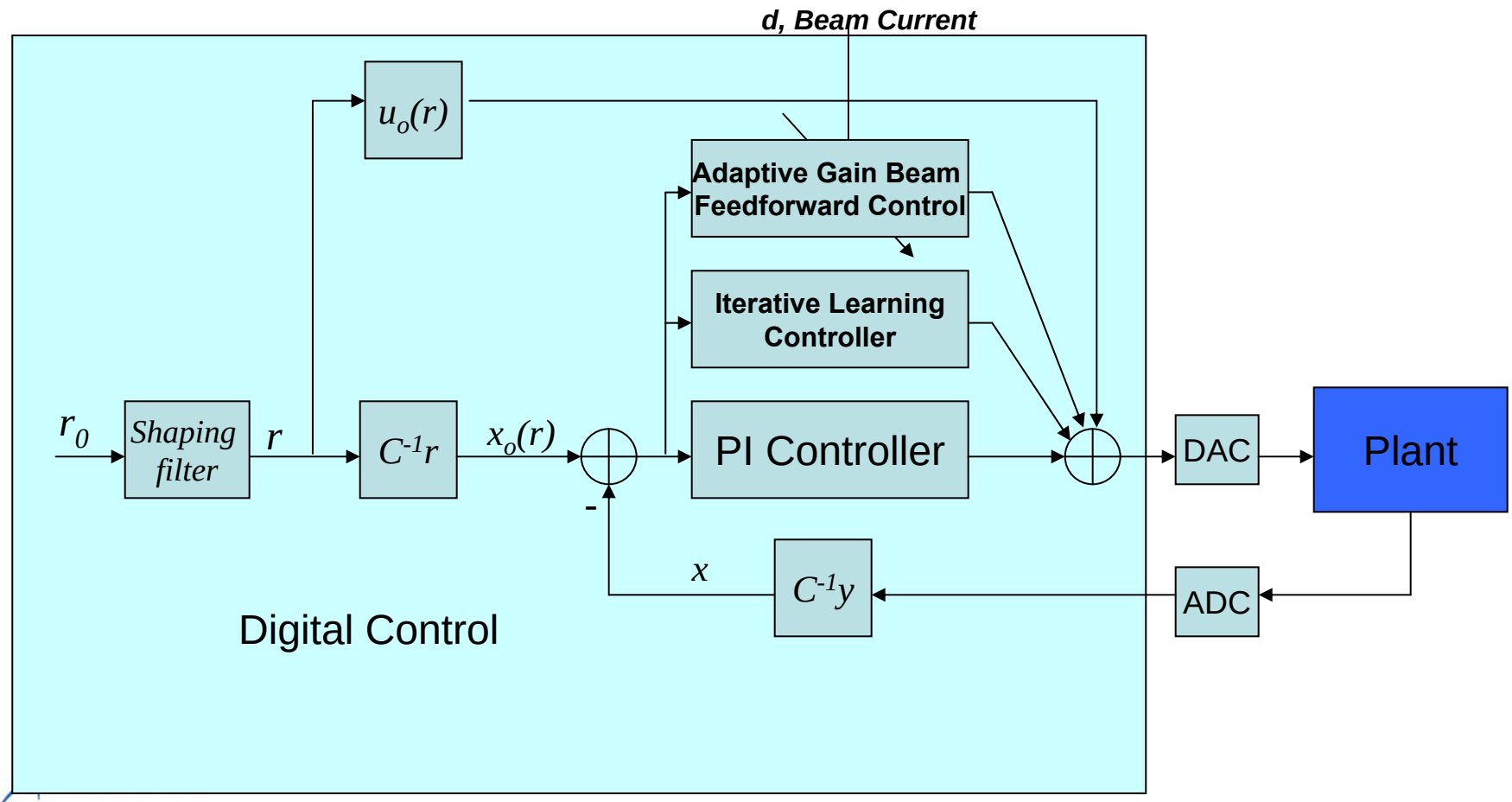

LANSCE-R: Feedback/Feedforward Control

- **Prototype Controller for LANSCE upgrade**
- **Operating Point based Gain Scheduling Control, reducing the transient fatigue**

$$u(t)=u_o(r(t))+\left(K_p(r(t))+\frac{K_I(r(t))}{s}\right)(x-x_o(r(t)))$$

$$0=Ax_o(r(t))+Bu_o(r(t)) \qquad u_o(r(t))=-B^{-1}AC^{-1}r(t)$$

$$r(t)=Cx_o(r(t)) \qquad x_o(r(t))=C^{-1}r(t)$$

- **Feedforward Control : Adaptive Beam Feedforward and Iterative Learning Control, improving Beam Loading Transient Behavior**

$$u_{FF}(j,t)=u_{BFF}(j,t)+u_{ILC}(j,t)$$

$$u_{BFF}(j,t)=K_{BFF}(j,t)d_{beam}$$

$$K_{BFF}(j+1,t)=K_{BFF}(j,t)-\lambda H^{-1}(K_{BFF}(j,t),d_{beam},e(j,t))\nabla J(K_{BFF}(j,t),d_{beam},e(n,t))$$

$$J(j,t)=\frac{1}{2}e^T(j,t)e(j,t)$$

LANSCE-R: Iterative Learning Control

$$U_F^{k+1} = Q\left(f \cdot U_F^k + \alpha \cdot LE^k\right)$$

$$\left\| Q(s)\left(f \cdot I - \alpha \cdot L(s) G_L(s, \Delta\omega_L, A_d)\right)\right\|_\infty < 1$$

$$G_L(s, \Delta\omega_L, A_d) = T(s, \Delta\omega_L, A_d) C^{-1}(s)$$

$$\lim_{k \to \infty} E^k = (I + CP)^{-1} R$$

Filter $L(s)$: Solution of Chebycheff Approximation

$$mim \max_{i=0,\cdots,N} \bar{\sigma}(G_L(\omega_i, \Delta\omega_L, A_d) - \hat{G}_L(\omega_i))$$

$$\hat{G}_{LI}(s) = \frac{s}{a_{I2}s^2 + a_{I1}s + a_{I0}}$$

$$\hat{G}_L(s) = \begin{bmatrix} \hat{G}_{LI}(s) & 0 \\ 0 & \hat{G}_{LQ}(s) \end{bmatrix}$$

LANSCE-R: Iterative Learning Control

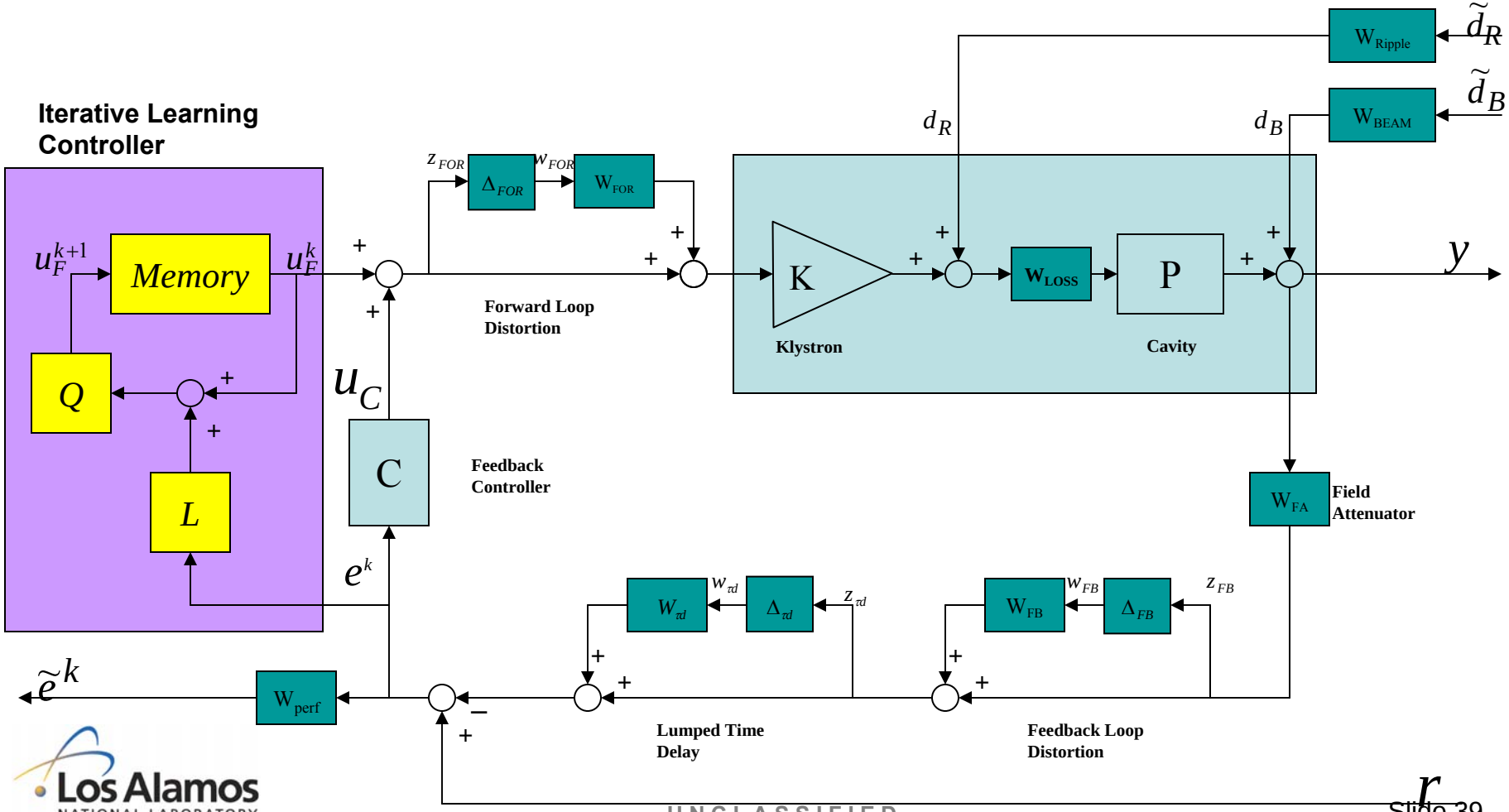

LANSCE-R: Iterative Learning Control, Simulation

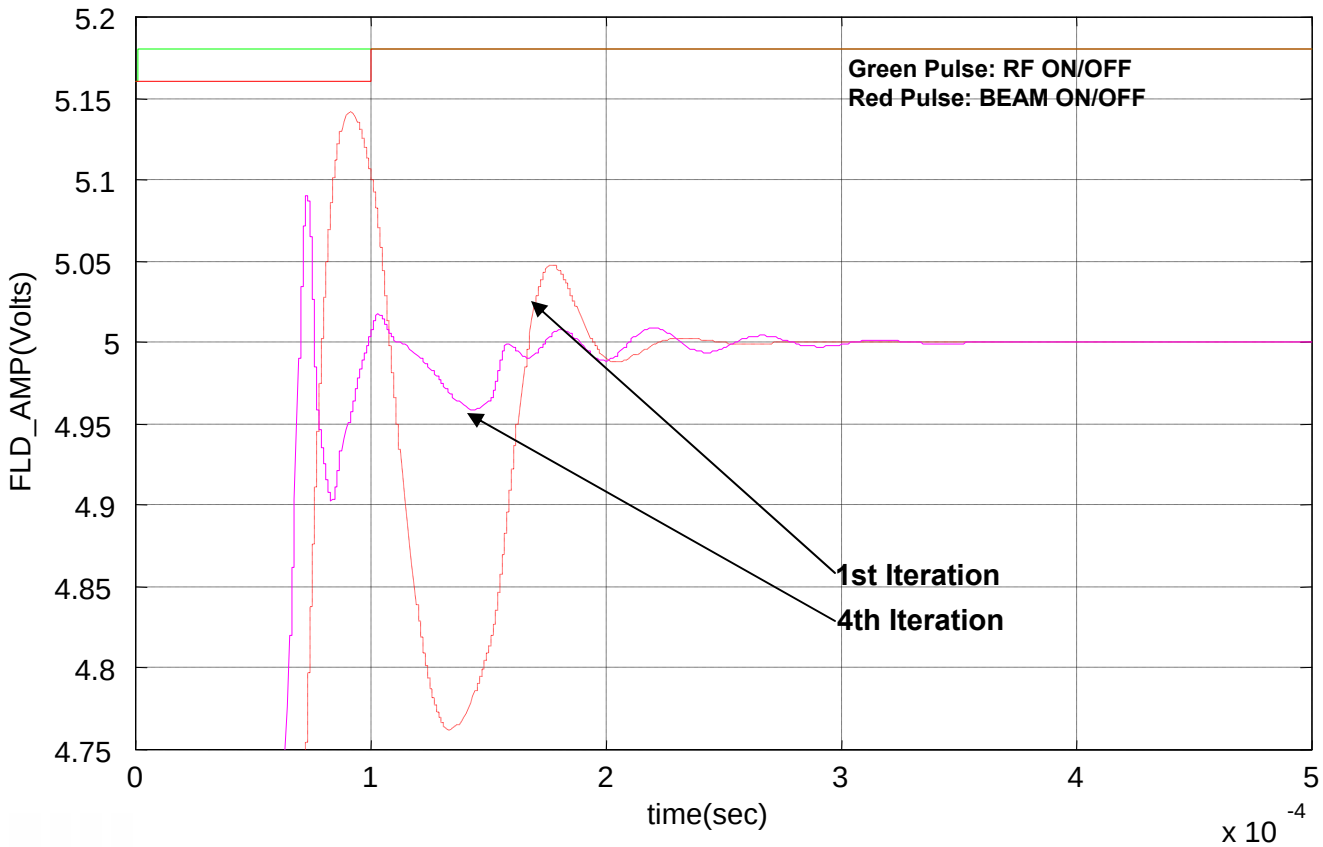

LANSCE-R: Test Stand Gain Scheduling Controller, Open Loop

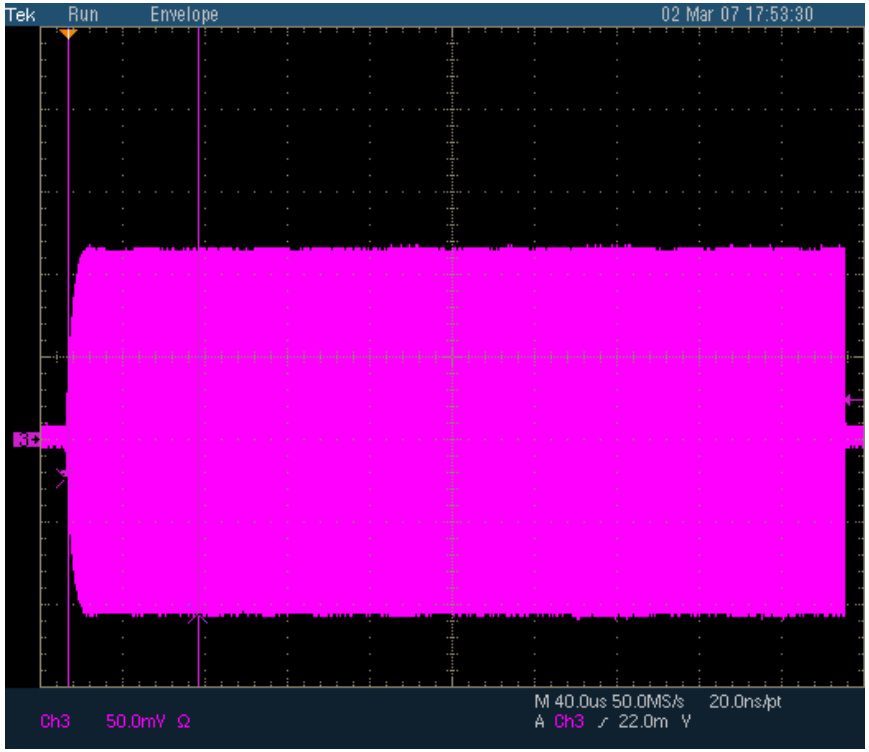

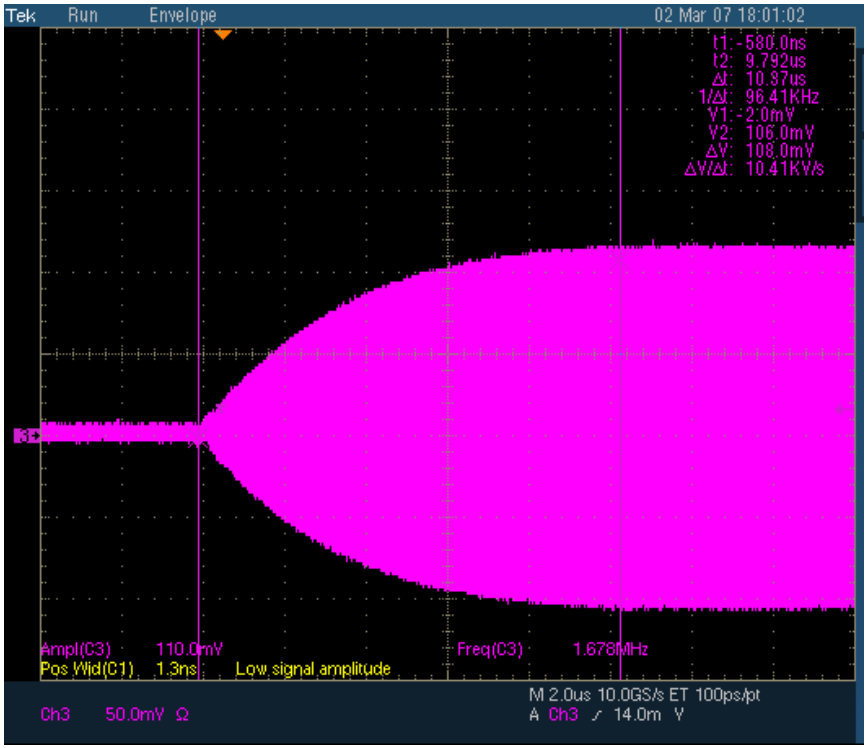

Rising time≈4μs, settling time≈10μs

LANSCE-R: Test Stand Gain Scheduling Controller, Closed Loop

Zoom

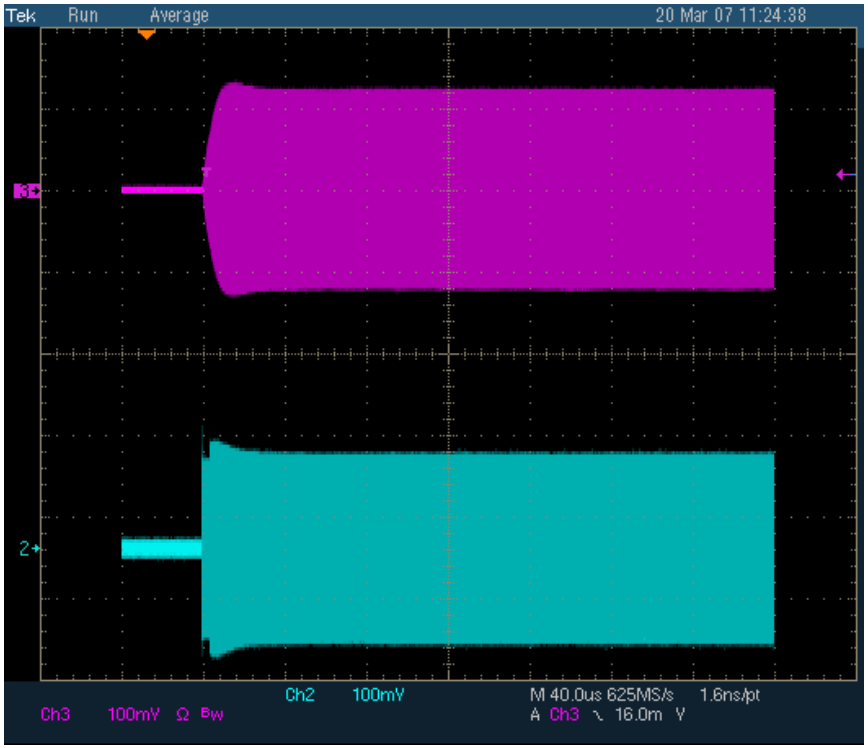

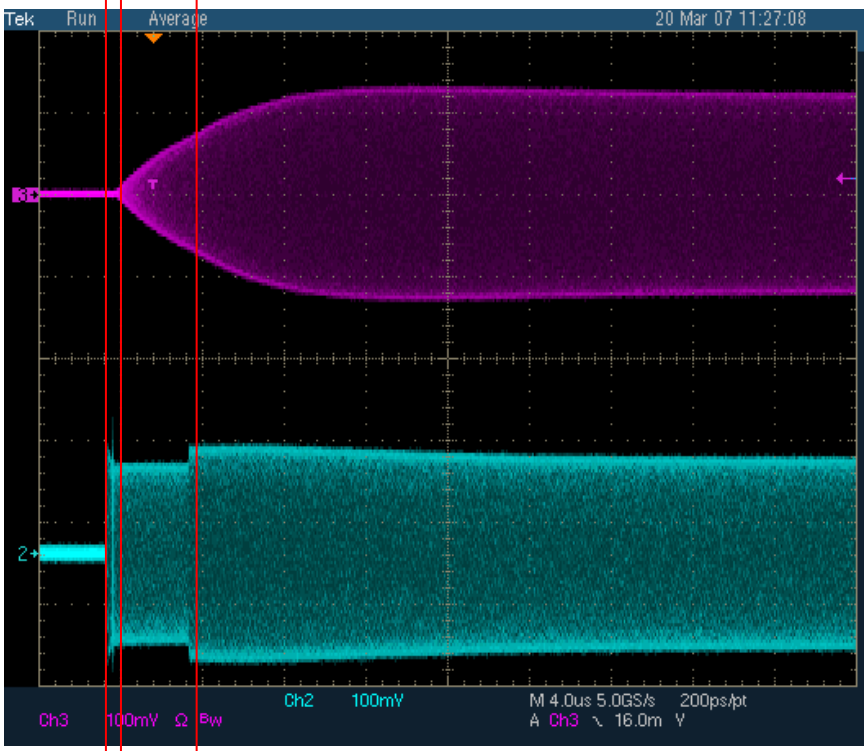

Delay is less than 1 μs

$K_P=0,\ K_i=0$

$K_P\neq0$, or $K_i\neq0$

LANSCE-R: Test Stand Gain Scheduling Controller, a Graphical User Interface Design example

- Parameters are downloaded/updated in real-time

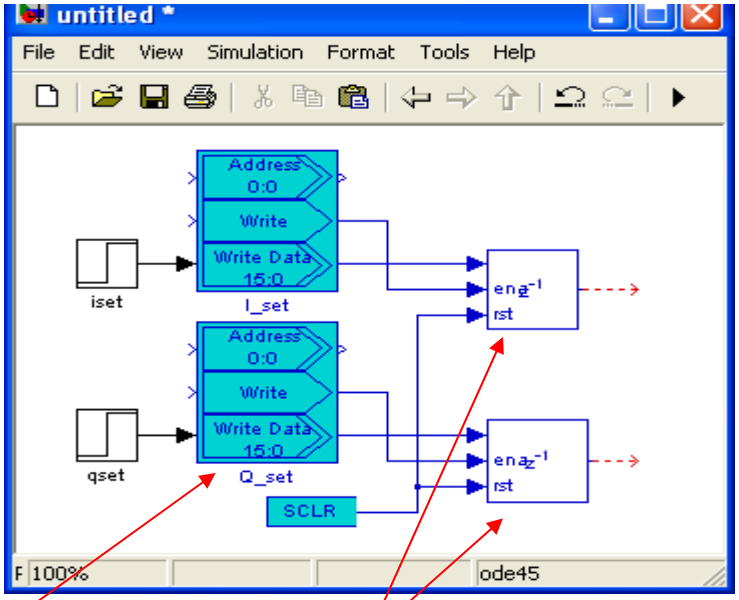

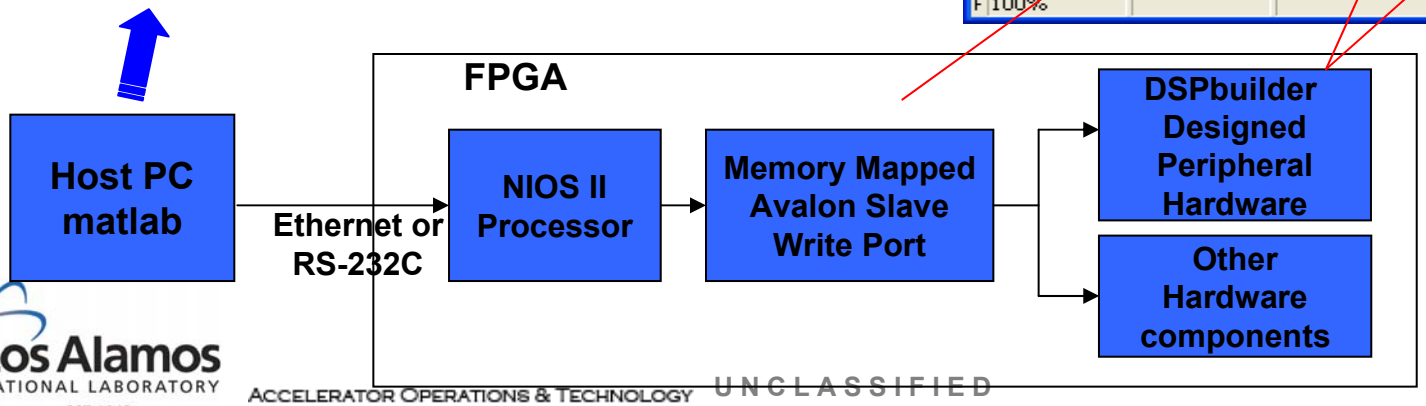

PI Controller Tuning

-RECURSIVE LEVENBERG-MARQUARDT ALGORITHM for SISO System

Cost function: $$J(\rho_j) = \frac{1}{2N}\sum_{n=1}^{N} w_n e^T(n,\rho_j)e(n,\rho_j)$$

***n*:samples at each iteration**

***j*: iteration**

error: $$e(n,\rho_j) = r - y(n,\rho_j)$$

gains: $$\rho_j = \begin{bmatrix}\rho_{1j} & \rho_{2j}\end{bmatrix}^T = \begin{bmatrix}k_{pj} & T_{Ij}\end{bmatrix}^T$$

Gain Update: $$\rho_{j+1} = \rho_j - H_j^{-1}(\rho_j)\frac{\partial J(\rho_j)}{\partial \rho_j}$$

Jacobian: $$\frac{\partial J(\rho_j)}{\partial \rho} = -\frac{1}{N}\sum_{n=1}^{N}\left(w_n e(n,\rho_j)\frac{\partial y(n,\rho_j)}{\partial u(n,\rho_j)}\frac{\partial u(n,\rho_j)}{\partial \rho}\right)$$

Hessian Approximation: $$H_j(\rho_j) \approx \frac{1}{N}A(\rho_j)WA^T(\rho_j) + \lambda_j I$$

$$A(\rho_j) = \begin{bmatrix} \frac{\partial y(1,\rho_j)}{\partial \rho_{1j}} & \frac{\partial y(2,\rho_j)}{\partial \rho_{1j}} & \cdots & \frac{\partial y(N,\rho_j))}{\partial \rho_{1j}} \\ \frac{\partial y(1,\rho_j)}{\partial \rho_{2j}} & \frac{\partial y(2,\rho_j)}{\partial \rho_{2j}} & \cdots & \frac{\partial y(N,\rho_j)}{\partial \rho_{2j}} \end{bmatrix}$$

Adaptive Gain Beam Feedforward

$$J(j,t)=\frac{1}{2}e^2(j,t)$$

$$u_{BFF}(j,t)=K_{BFF}(j,t)d_{beam}$$

$$K_{BFF}(j+1,t)=K_{BFF}(j,t)-\lambda H^{-1}(K_{BFF}(j,t),d_{beam},e(j,t))\nabla J(K_{BFF}(j,t),d_{beam},e(j,t))$$

$$\nabla J(K_{BFF}(j,t),d_{beam},e(j,t))=\frac{\partial J}{\partial K_{BFF}}=\frac{\partial J}{\partial e}\frac{\partial e}{\partial y}\frac{\partial y}{\partial u}\frac{\partial u}{\partial K_{BFF}}\approx -G_{ss}d_{beam}e(j,t)$$

Since H>0, $\quad H(K_{BFF}(j,t),d_{beam},e(j,t))\approx A^2(K_{BFF}(j,t),d_{beam},e(j,t))$

$$A(K_{BFF}(j,t),d_{beam},e(j,t))=\frac{\partial y}{\partial K_{BFF}}=\frac{\partial y}{\partial u}\frac{\partial u}{\partial K_{BFF}}\approx G_{ss}d_{beam}>0$$

$$K_{BFF}(j+1,t)=K_{BFF}(j,t)+A^{-2}(K_{BFF}(j,t),d_{beam},e(j,t))G_{ss}d_{beam}e(j,t)$$

$$\boxed{\begin{aligned}K_{BFF}(j+1,t)&=K_{BFF}(j,t)+\frac{1}{G_{ss}d_{beam}}e(j,t)\\ u_{BFF}(j,t)&=K_{BFF}(j,t)d_{beam}\end{aligned}}$$

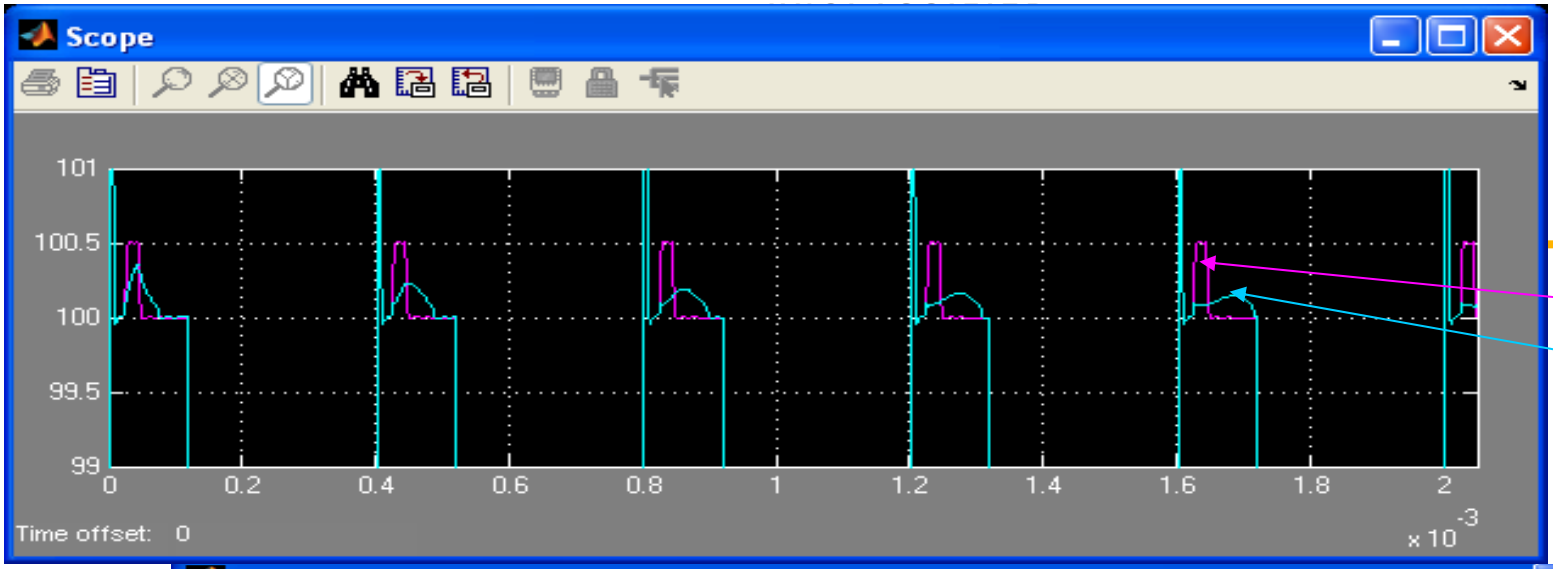

PI only

PI with Feedforward

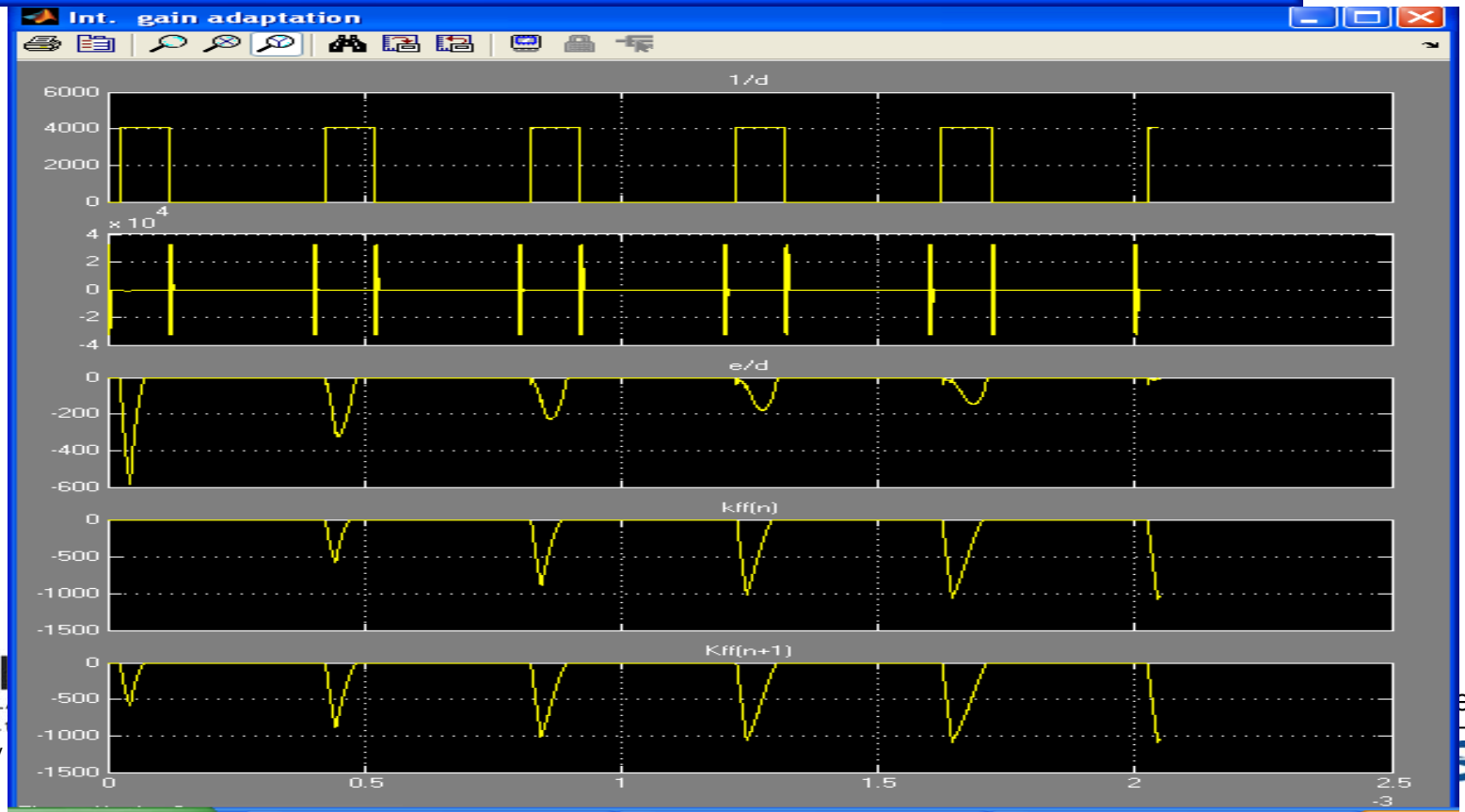

Adaptive Resonance Control for LANSCE-R

Resonance Control :
Frequency Agile Control and Resonance Control

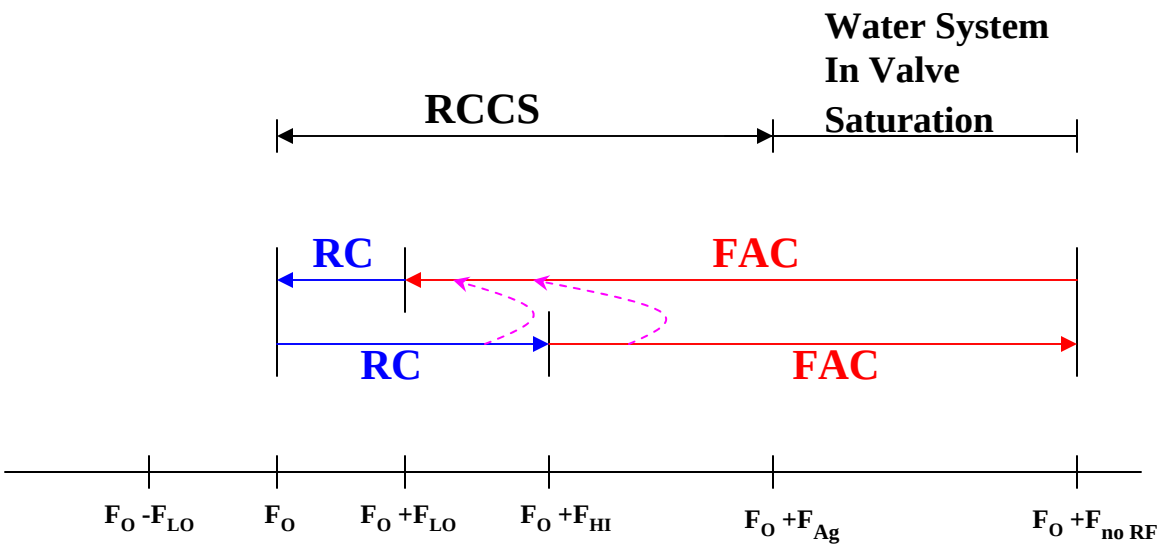

FAC : Frequency Agile Control
RC : Resonance Control
RCCS : Water Cooling Control System

Resonance Control Scheme

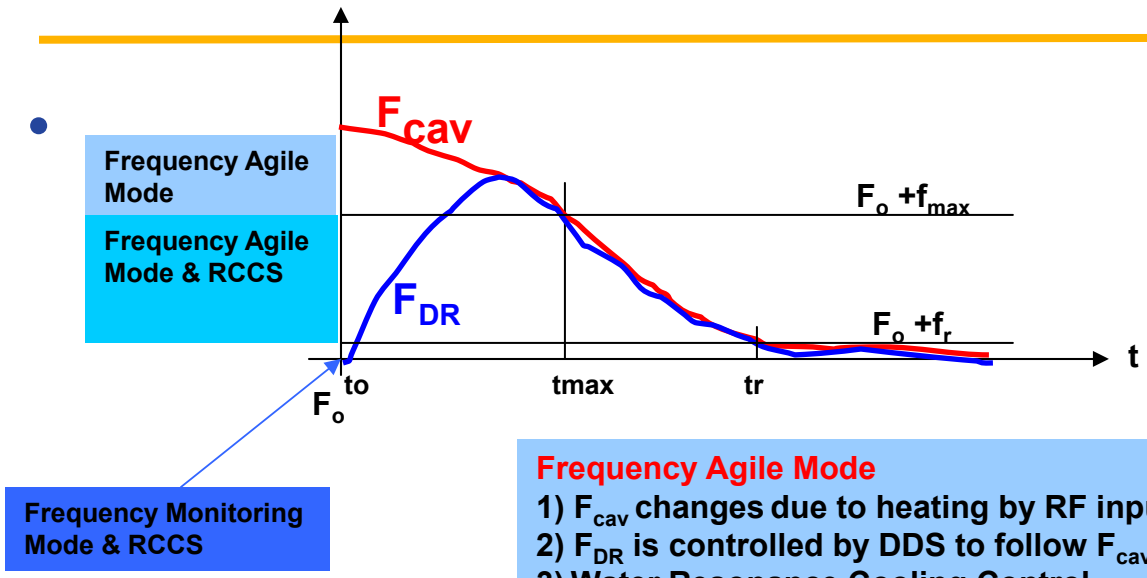

RCCS: $F_{cav} \rightarrow F_O$

Freqency Agile Mode Control : $F_{DR} \rightarrow F_{cav}$

Frequency Agile Mode
1) F_{cav} changes due to heating by RF input
2) F_{DR} is controlled by DDS to follow F_{cav}
3) Water Resonance Cooling Control System (RCCS) is not activated

Frequency Agile Mode& RCCS
1) F_{cav} is controlled by RCCS to approach F_o
2) F_{DR} is controlled by DSP/DDS to follow F_{cav}

Frequency Monitoring Mode & RCCS
1) F_{cav} is controlled by RCCS
2) $F_{DR}=F_o$
3) $\Delta f=F_{DR}-F_{CAV}$ monitored, reported by DSP
4) Field Control is activated

Frequency Error Estimation

Instantaneous Frequency Error Equation :

$$\Delta\omega(k) = K\frac{f_o}{2Q_0}\frac{2\left(V_{TI}(k)V_{FQ}(k) - V_{FI}(k)V_{TQ}(k)\right)}{V_{TI}^2(k) + V_{TQ}^2(k)}$$

Average Frequency Error Equation :

$$\Delta\overline{\omega}(n) = \frac{\frac{1}{N}\sum_{k=N_0}^{N_0+N-1} V_{TI}(n,k)V_{FQ}(n,k) - V_{TQ}(n,k)V_{FI}(n,k)}{\frac{1}{N}\sum_{k=N_0}^{N_0+N-1} V_{TI}^2(n,k) + V_{TQ}^2(n,k)}$$

$$A(n) = \frac{1}{N}\sum_{k=N_0}^{N_0+N-1} V_{TI}^2(n,k) + V_{TQ}^2(n,k)$$

Gain Adaptation :

$$K(n+1) = K(n) + \varepsilon(A(n) - A(n-1))\left\|\Delta\overline{\omega}(n)\right\|$$

Frequency Error Tracking Filter :

$$\Delta f(n+1) = \alpha\Delta f(n) + K(n)\Delta\overline{\omega}(n)$$

$$f(n+1) = f(n) + \Delta f(n)$$

n: RF Pulse Number, *k*: sample number

Direct Conversion Receiver Architecture

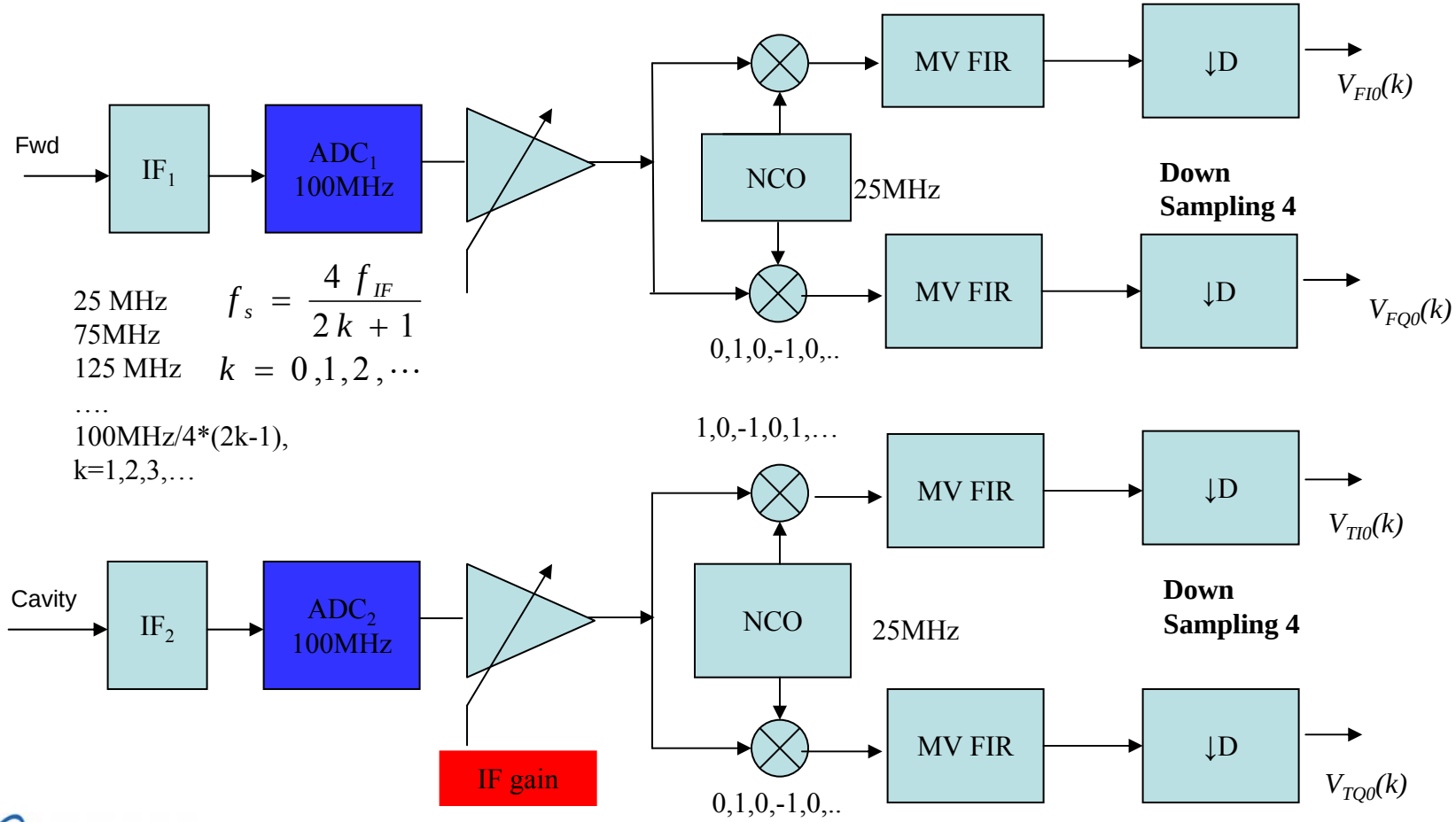

$$f_s = \frac{4 f_{IF}}{2k+1}$$

$$k = 0, 1, 2, \cdots$$

25 MHz
75MHz
125 MHz
….
100MHz/4*(2k-1),
k=1,2,3,…

We can replace Moving Average Filter (MV Filter) with FIR FIR

Frequency Error Tracking

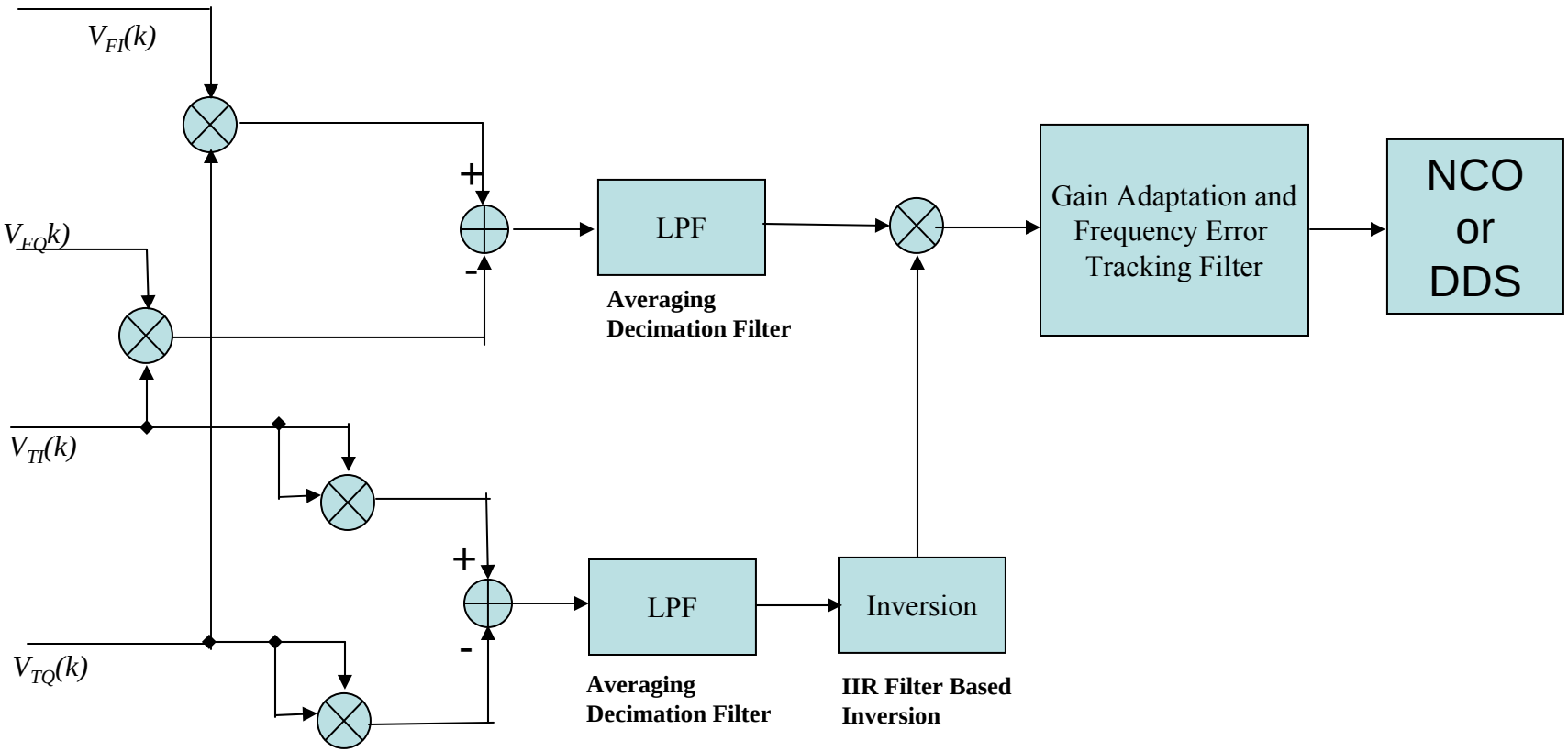

SIMULINK MODEL Simulation: -21.5 KHz Frequency tuned case

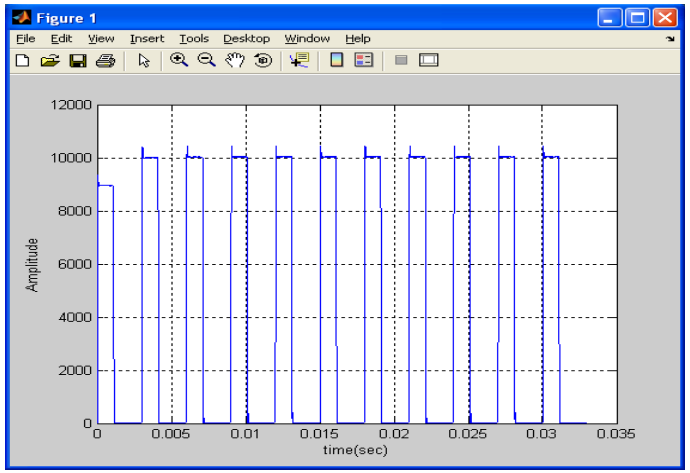

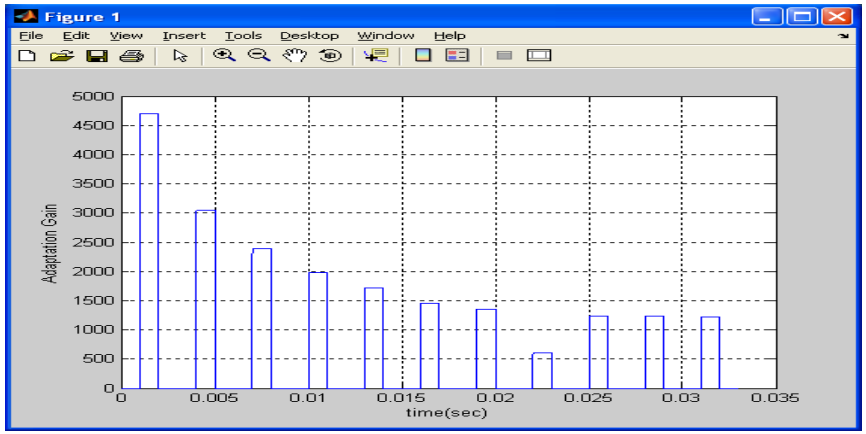

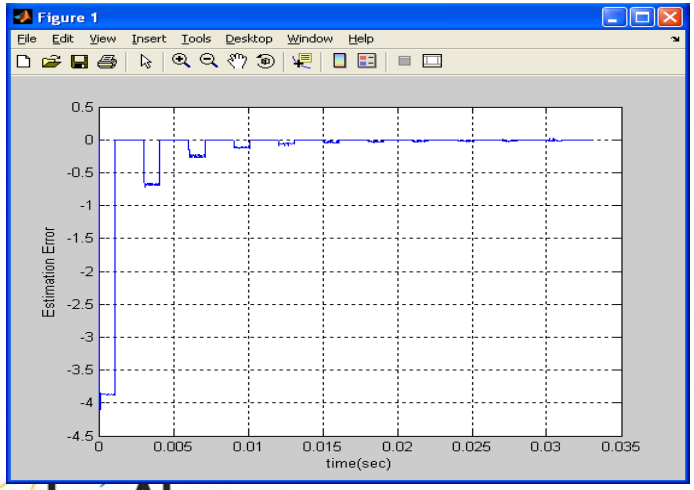

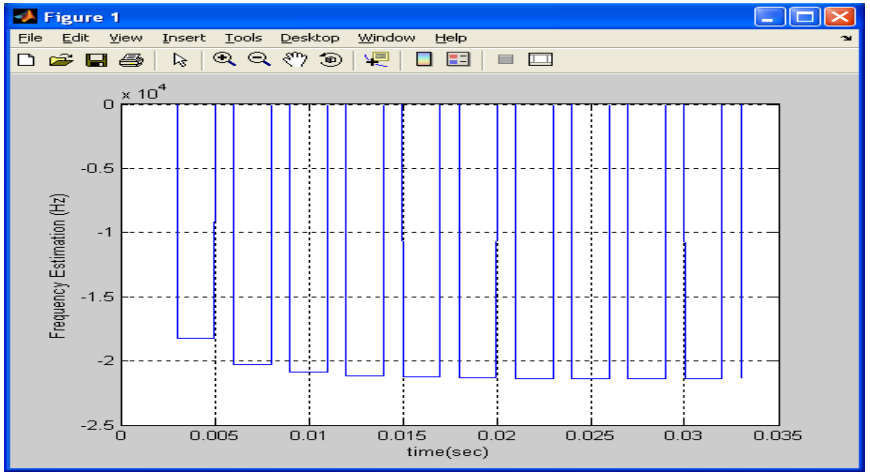

Development Board Test- Signal Tap Analyzer used

.Cavity operating freq: 402.5 MHz
.Q:9850
.f3dB=21.5 KHz (single-sided)
.Cavity is -21.5 kHz OFF

- : -5f3dB Frequency Error
- : -f3dB Frequency Error
- : -0.5f3dB Frequency Error
- : - 0.1f3dB Frequency Error
- : 0
- : 0.1f3dB Frequency Error
- : 0.5f3dB Frequency Error
- : f3dB Frequency Error
- : 5f3dB Frequency Error

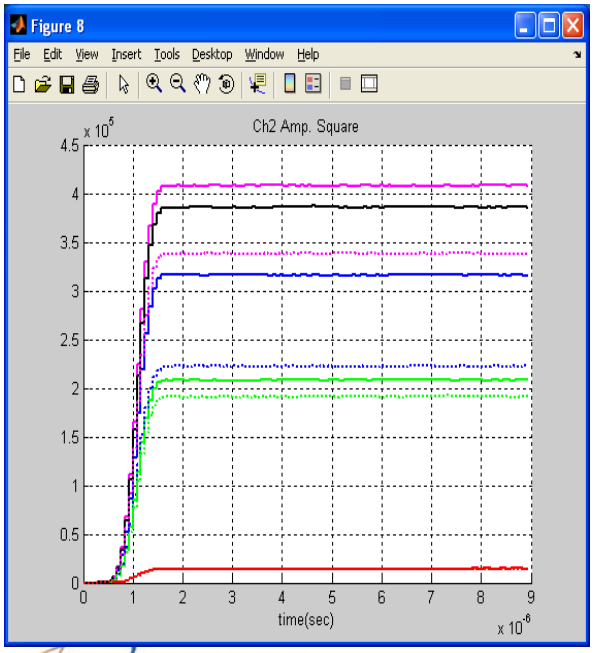

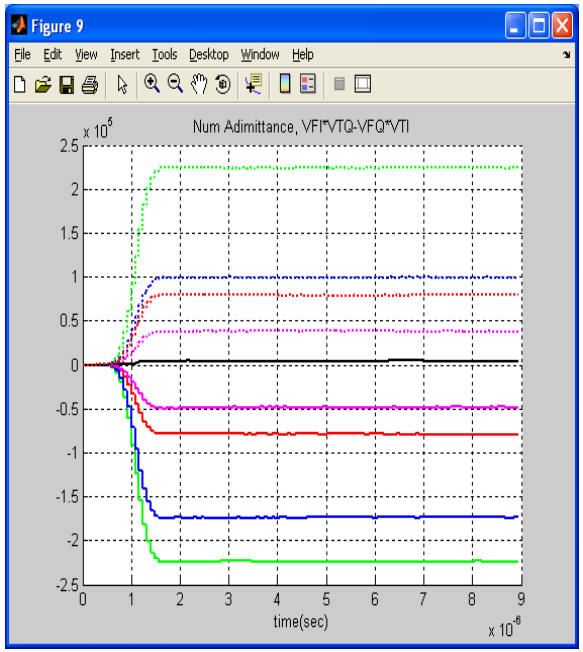

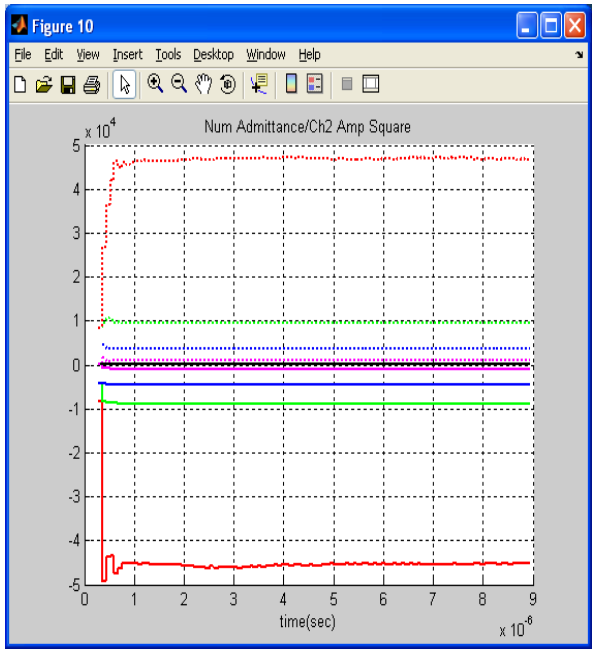

Y value is Scaled by 2^{13}