LLRF Development at DESY

S. Simrock, DESY
for the LLRF Team

Outline

- LLRF Systems at FLASH
- Commissioning of FLASH
- Machine Studies at FLASH
- LLRF for the European XFEL
- FP6 and FP7 Programs
- LLRF Work for ILC

Topics

- Master Oscillator and Distribution
- Downconverters
- Digital Feedback Hardware
- Field Controller
- Piezo Control
- RF Gun Control without Probe
- Beam loading compensation
- Dosimetry and Radiation Immunity
- ATCA based LLRF Control

Collaboration

DESY WUT-ISE TUL-DMCS PSI

also worldwide participation by
FNAL, KEK, IHEP, ORNL, JLAB ...

LLRF Collaboration at Work (24.9.07 early morning)

LLRF at FLASH

FLASH – the machine (in autumn 2007)

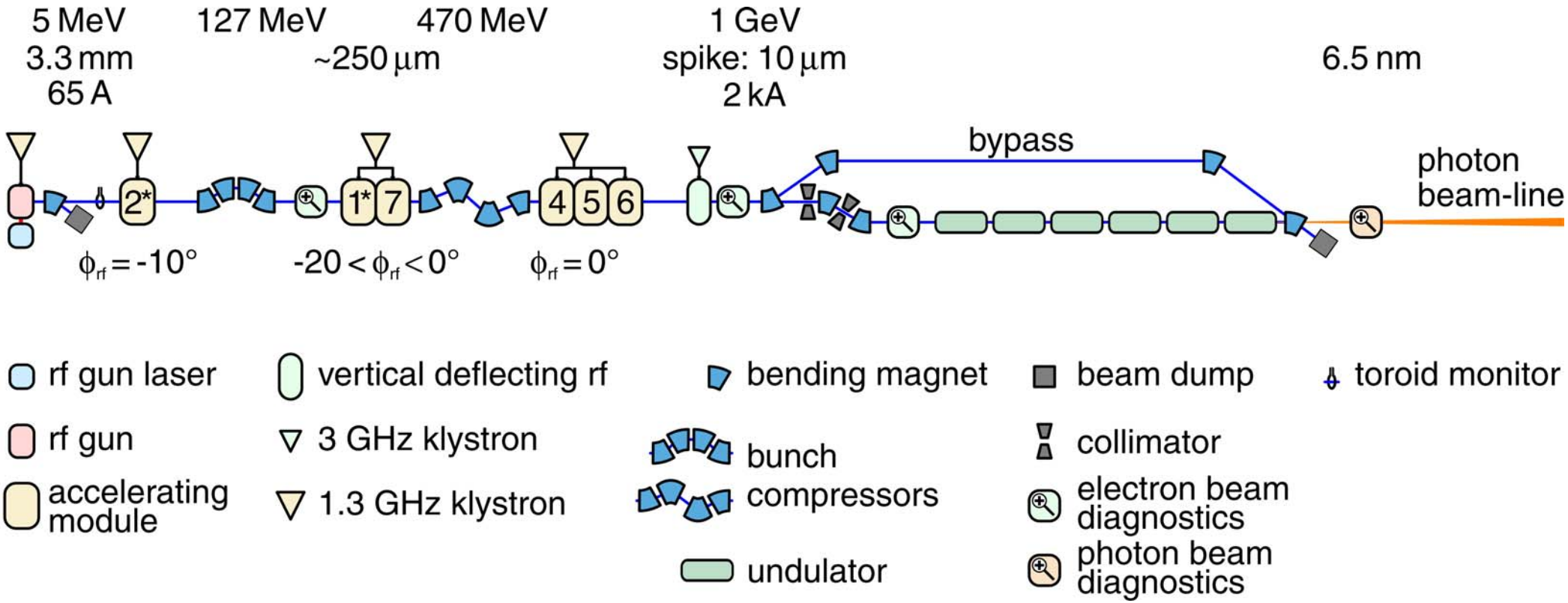

- initial bunch length restricted by collective effects
- two stage bunch compression
- off crest acceleration in ACC1 and ACC2/3
- requires good rf field stability

FLASH time structure

High gradients and moderate cooling demand (cryogenic load) by using pulsed rf:

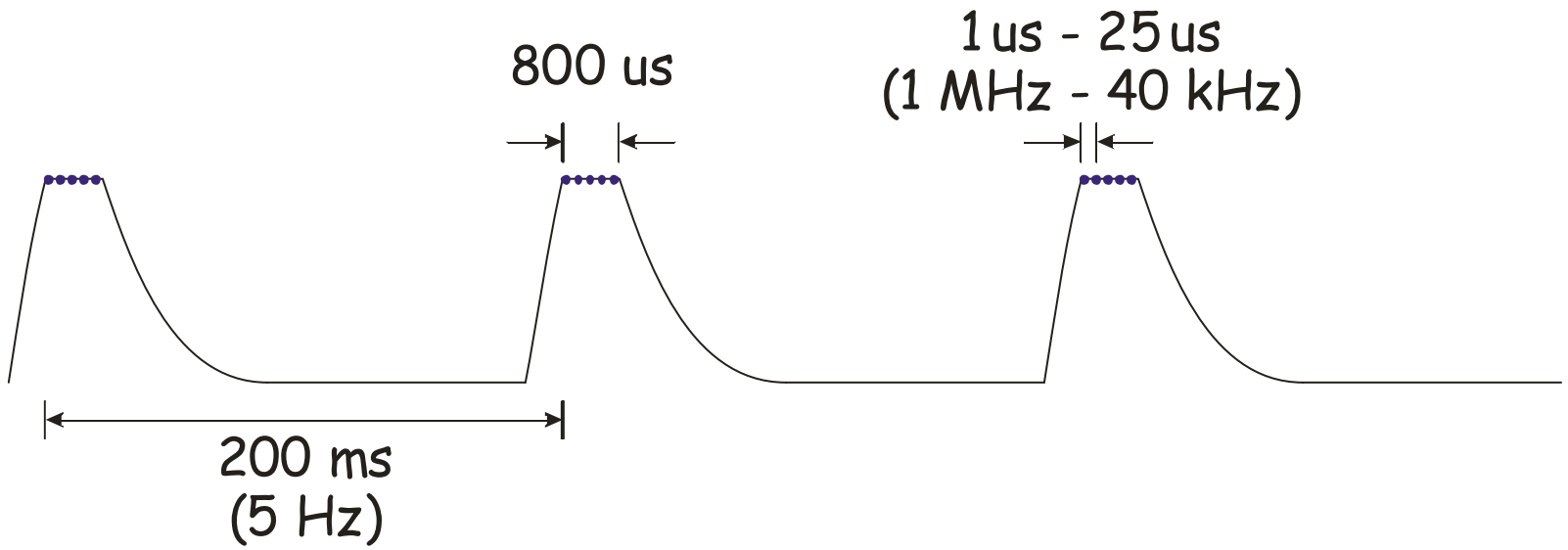

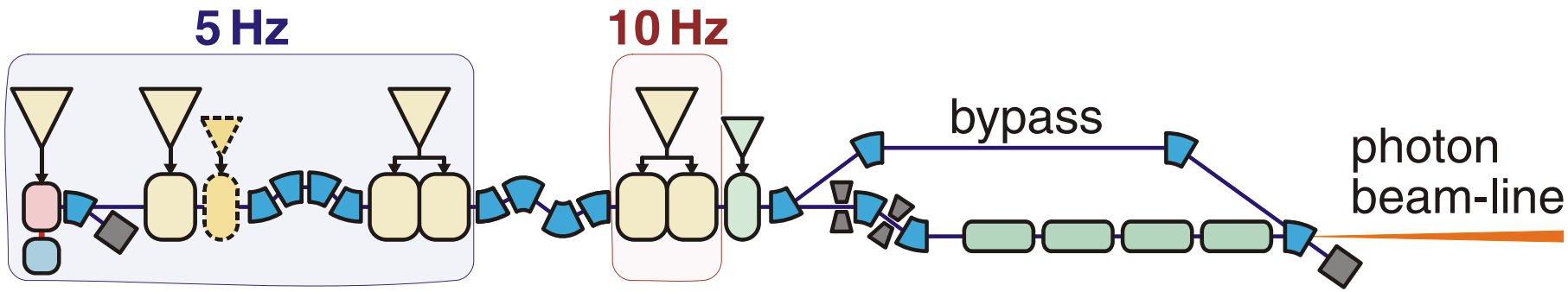

System Architecture Details

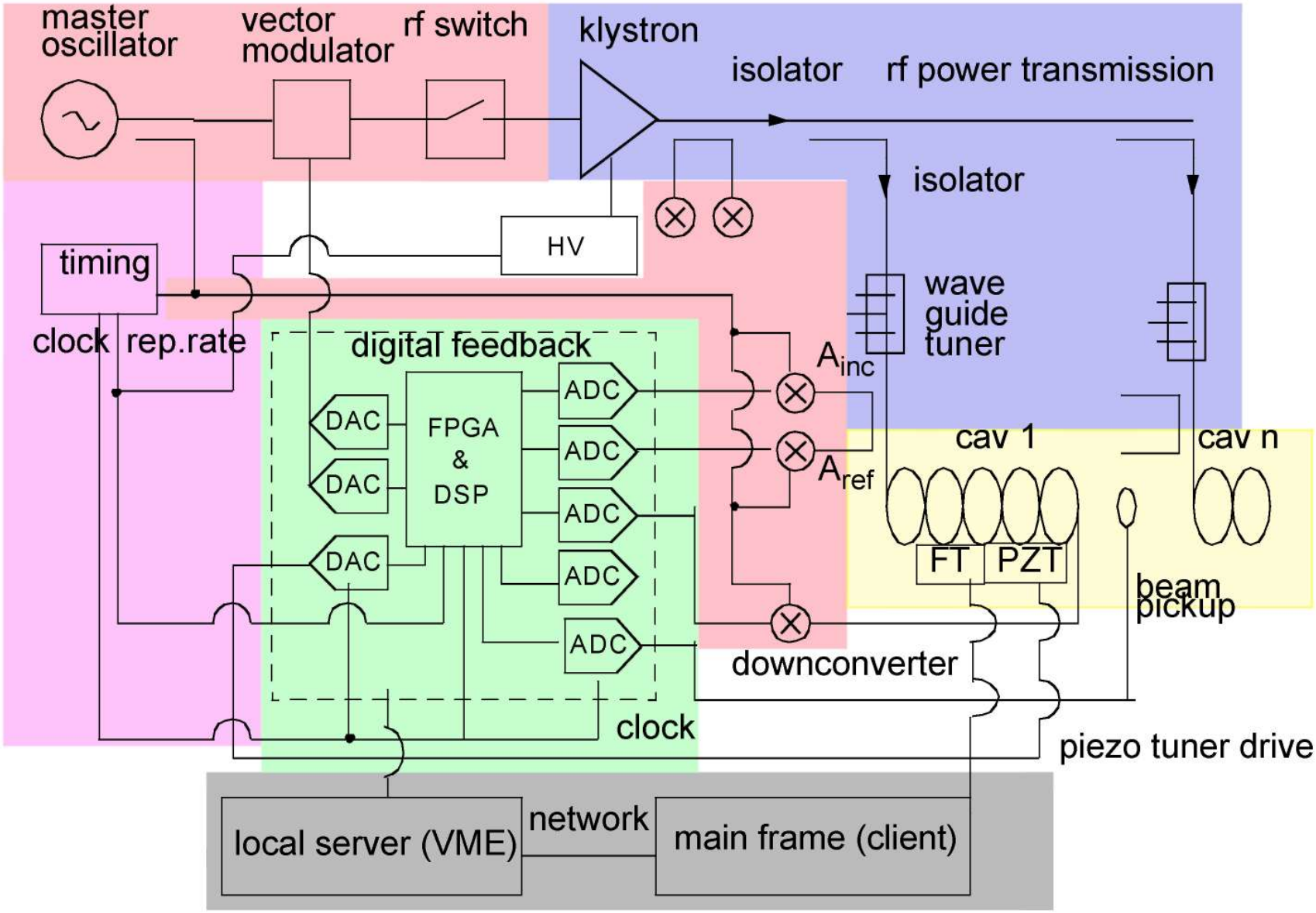

Infrastructure (Cabling, Racks, Crates)

Gun and ACC1

ACC2, ACC3, ACC4 & ACC5

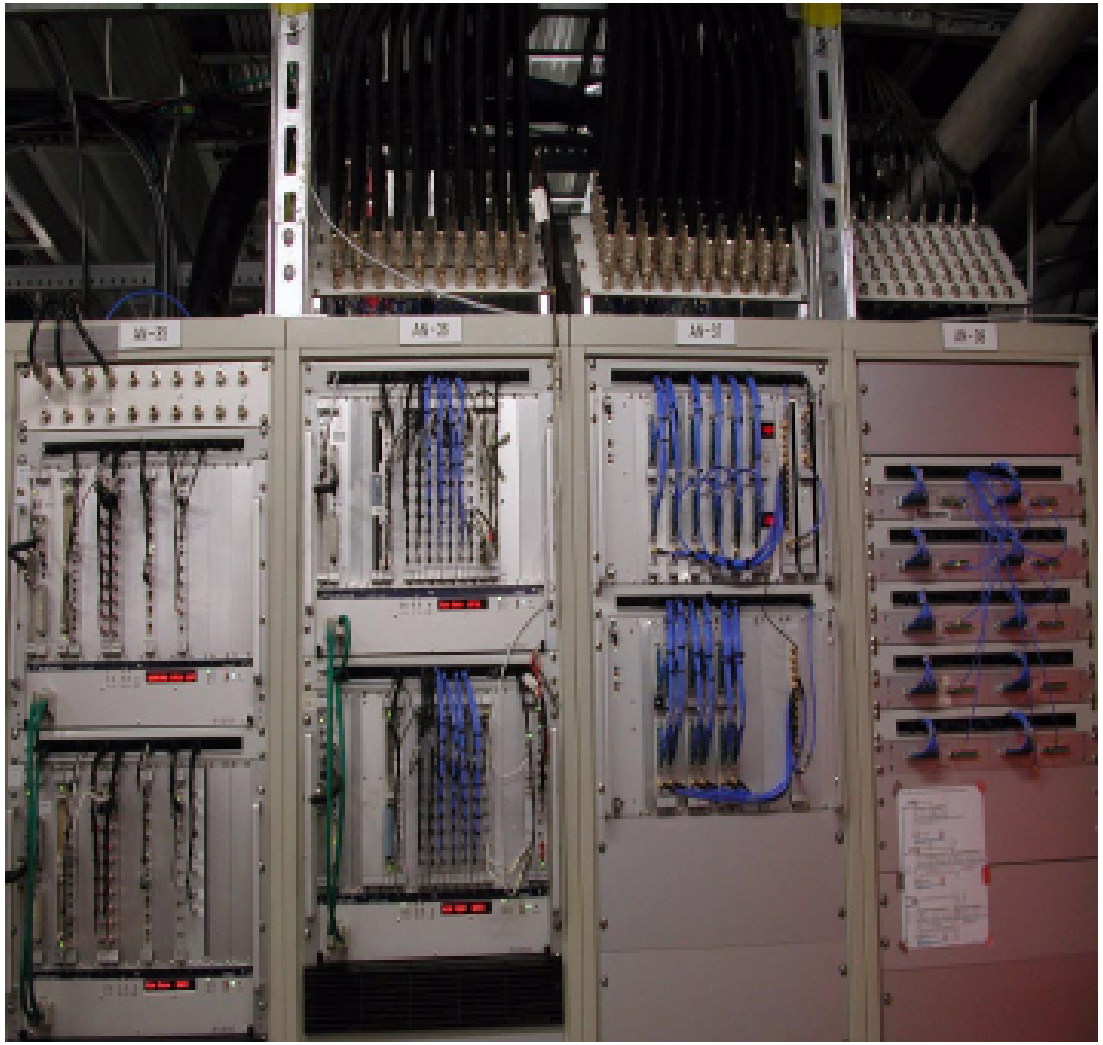

Hardware (Downconverter)

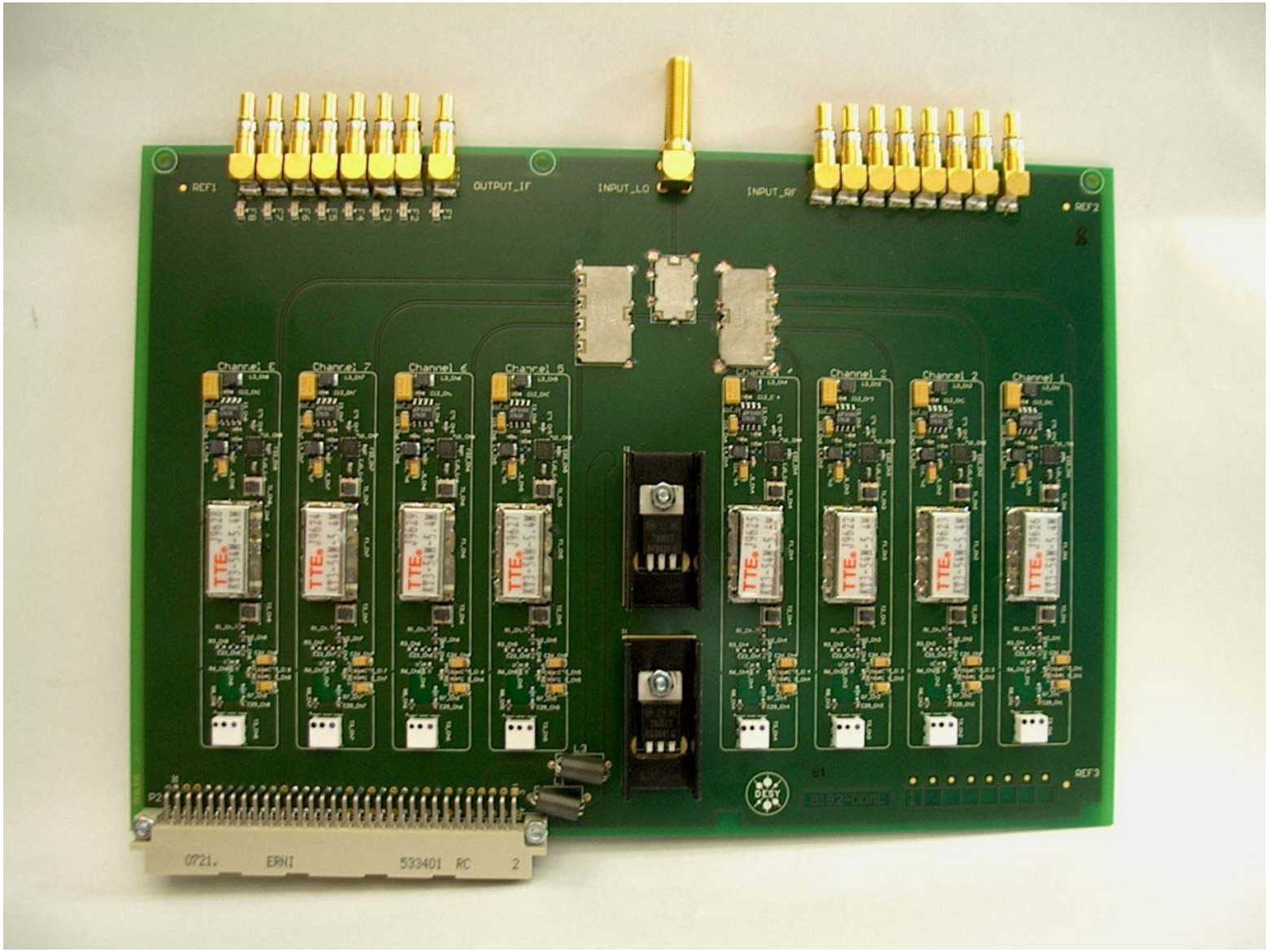

Hardware (SIMCON DSP)

Performance (Field Regulation)

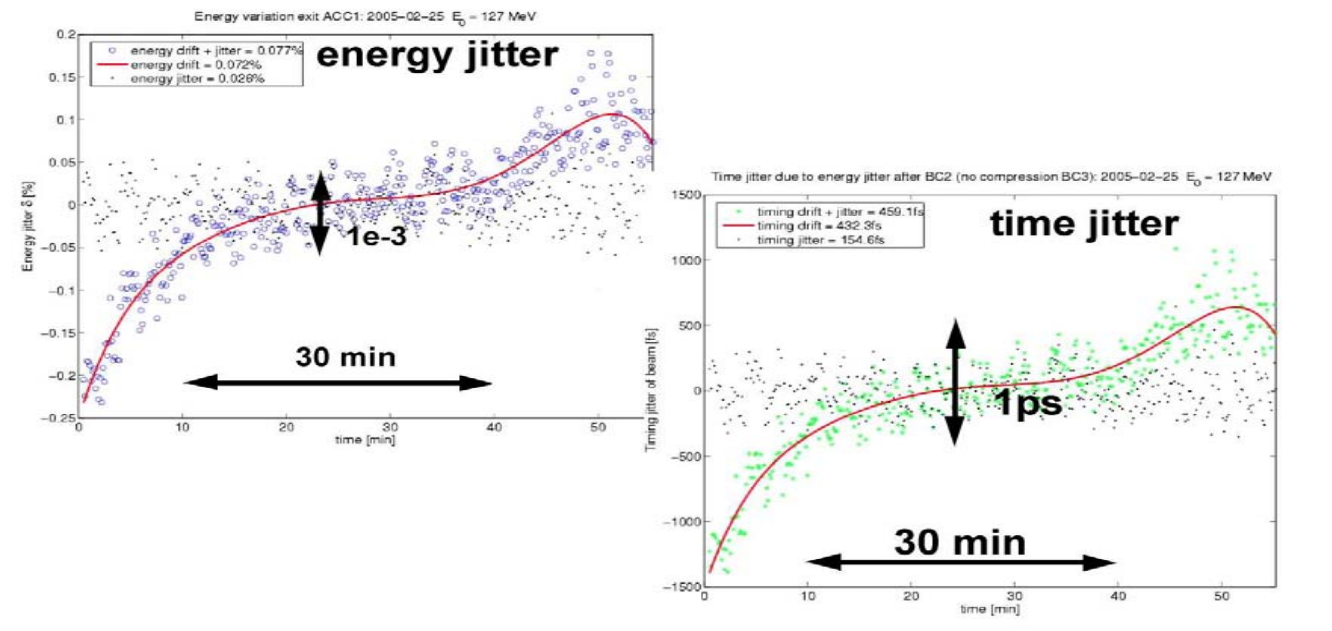

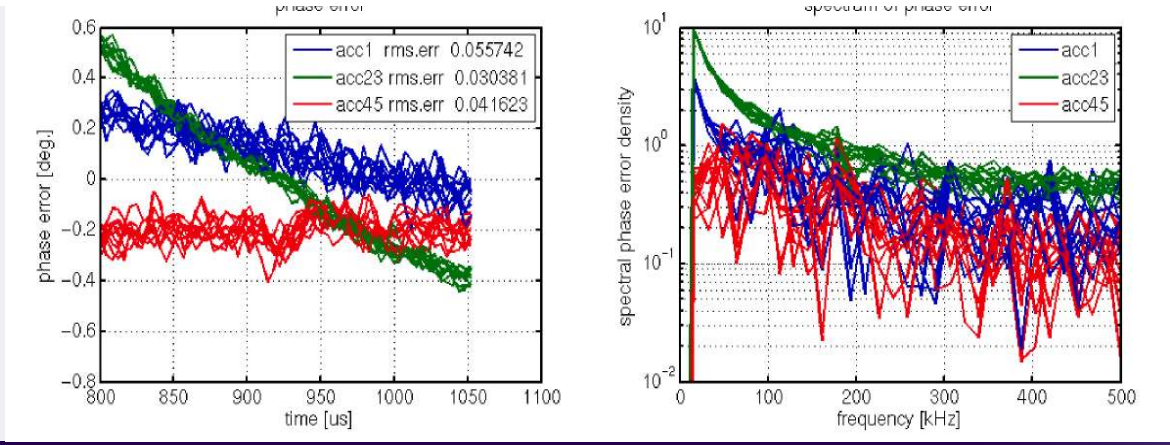

Master Oscillator and Distribution

Test setup in laboaratory

Left rack: RF crates for generating, amplifying and splitting the MO signals

Right: bottom 19´´
linear regulated power supplies,
Above: battery backed up PS for LPP
On top: 3 crates with microcontrolers
Collecting supervision signals from crates, transmitting them via Ethernet
to the DOOCS control system

NEW MASTER OSCILLATOR SYSTEM

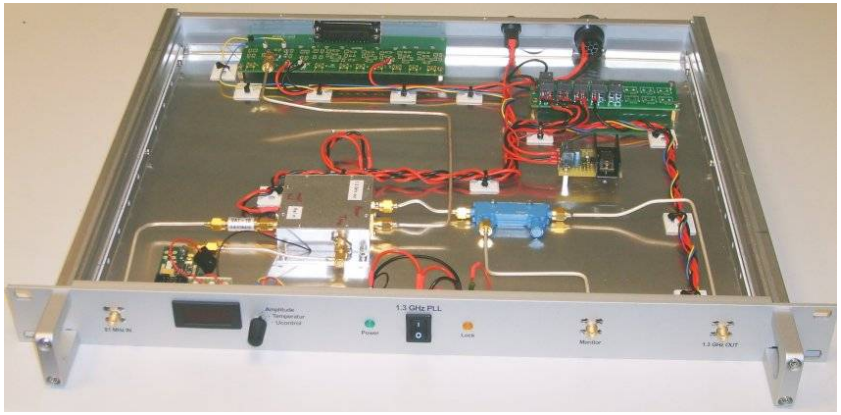

Drift tests

1.3 GHz PLL´s driven from the same source, but on different temperatures

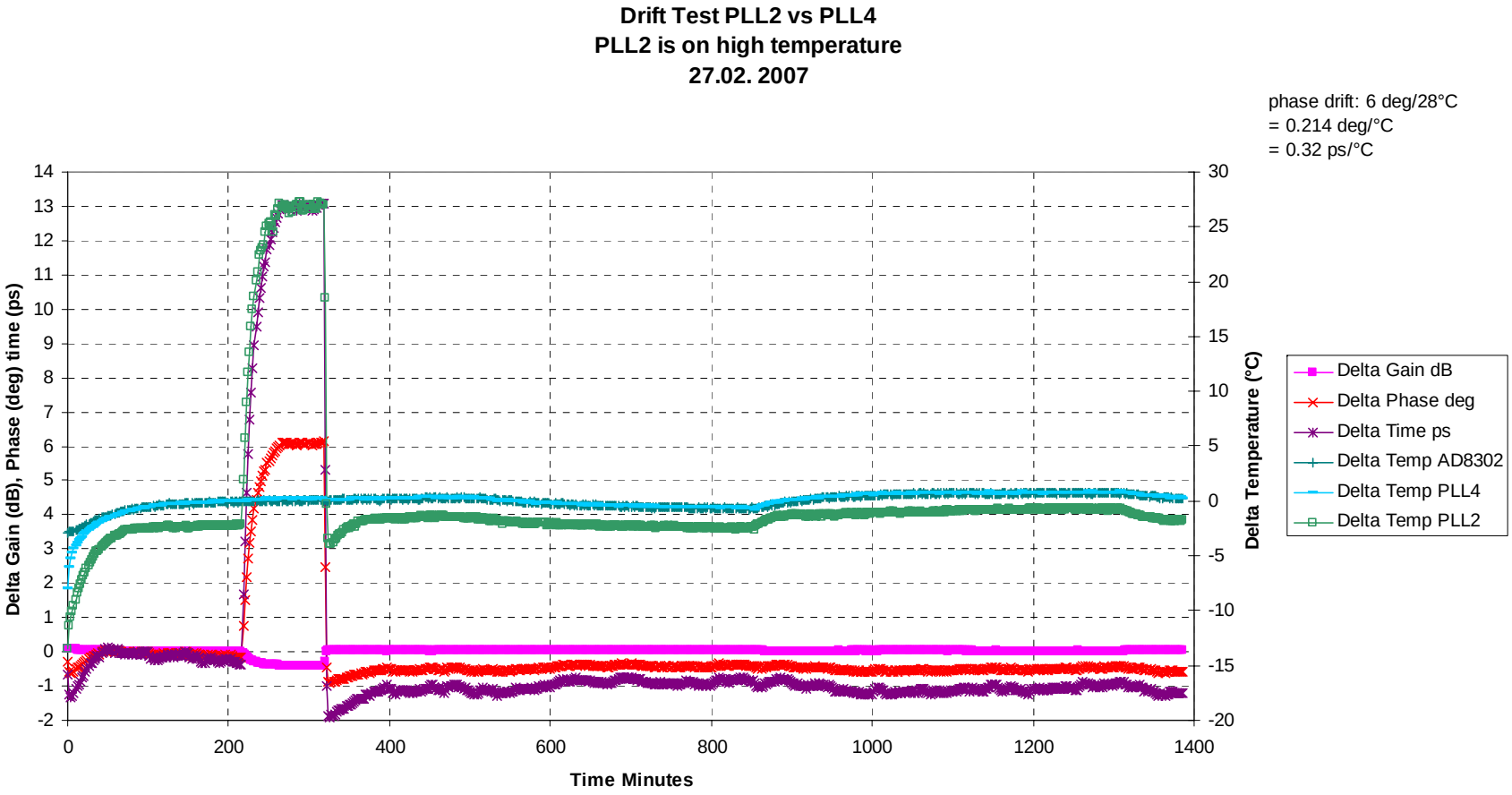

Drift of a 1.3 GHz HPA

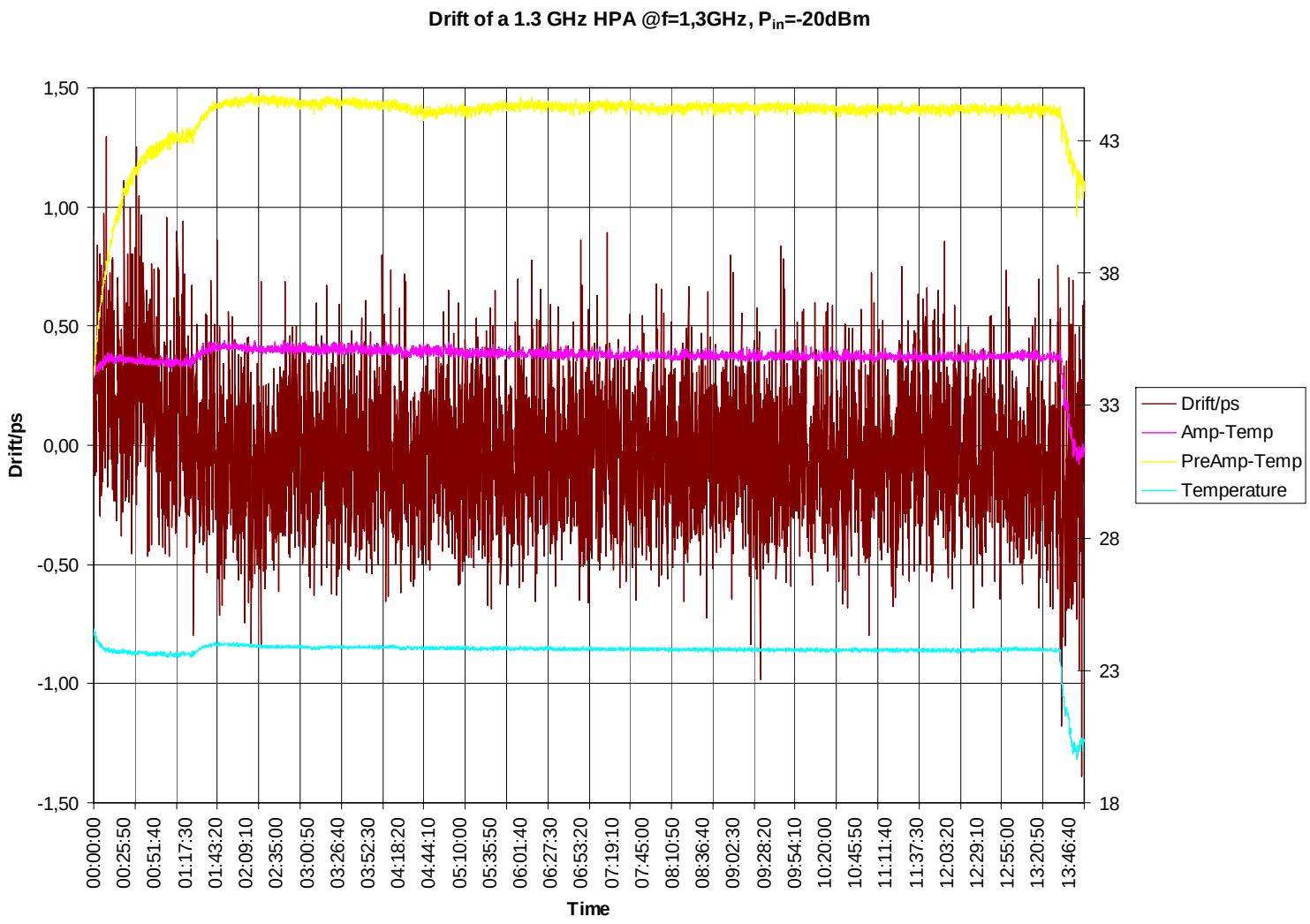

Cable drifts in accelerator

„cable 6“ to hall 3 extension, open ended, about 100 m long 7/8´´ cellflex cable

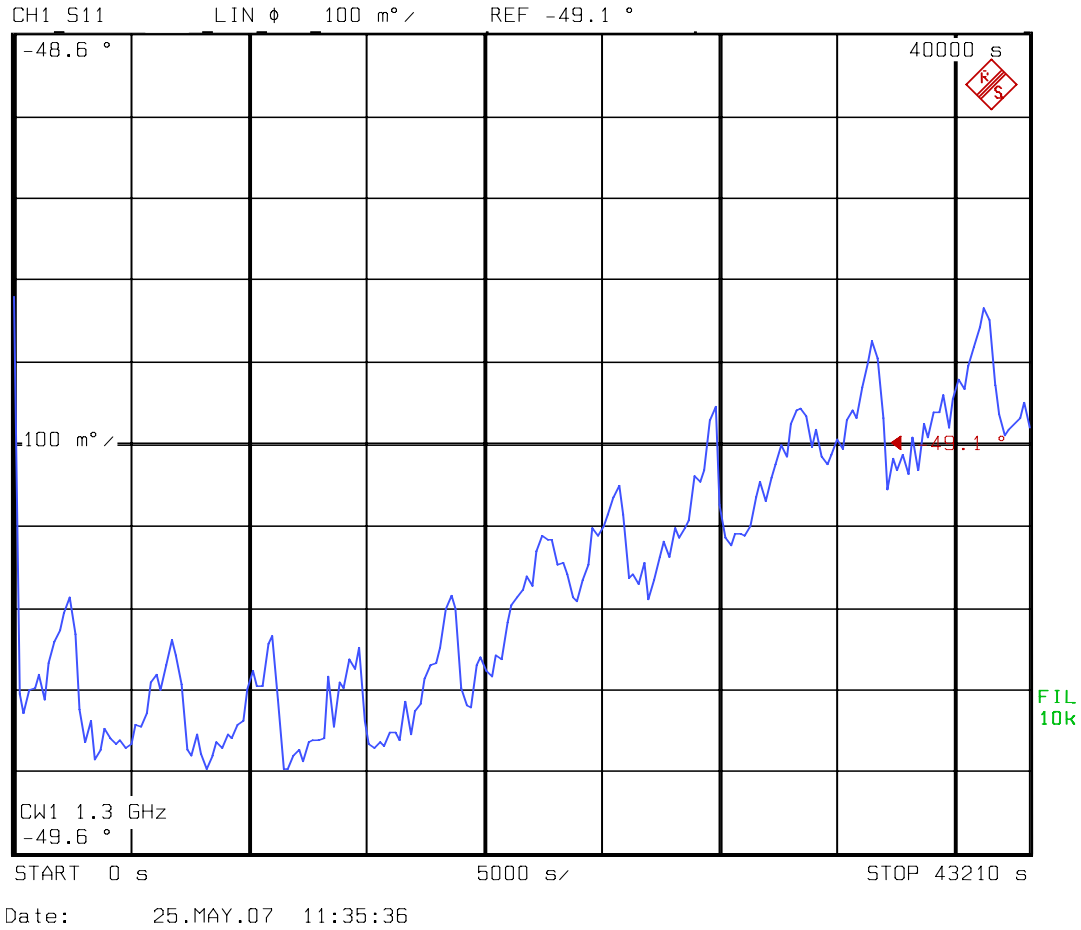

The good, bad and ugly in assembly and cabling

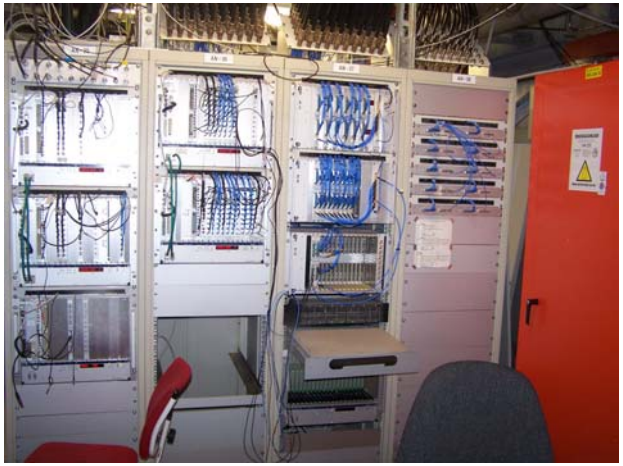

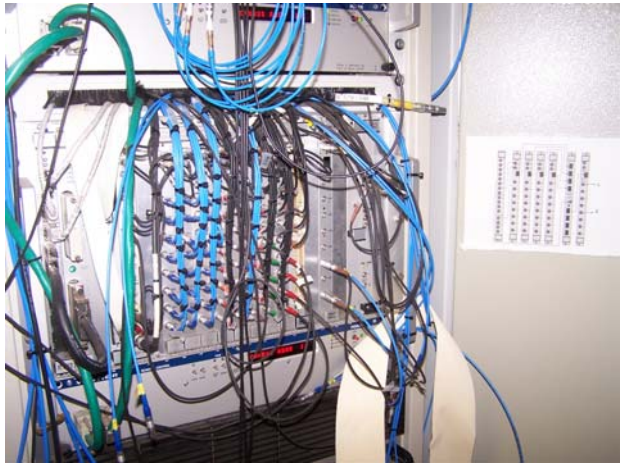

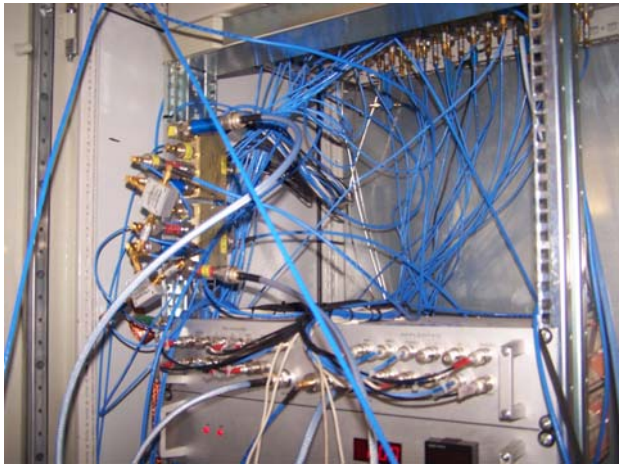

Commissioning of FLASH

FLASH shutdown and commissioning 2007

Katja Honkavaara

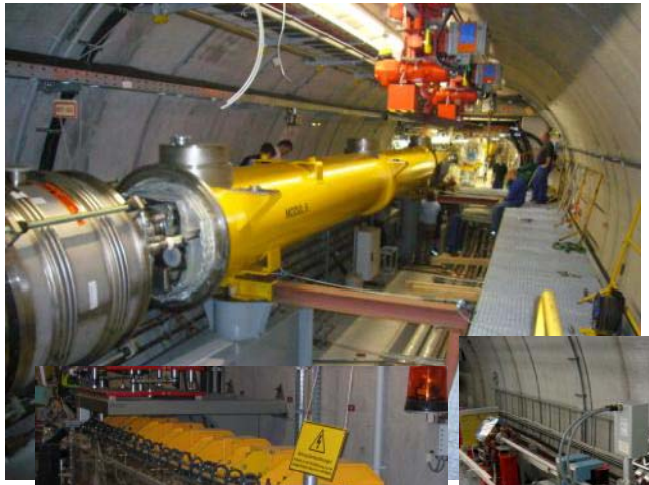

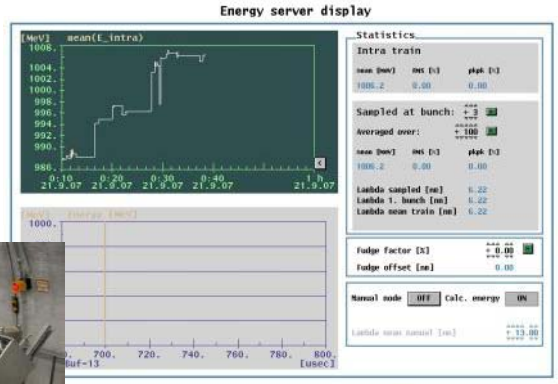

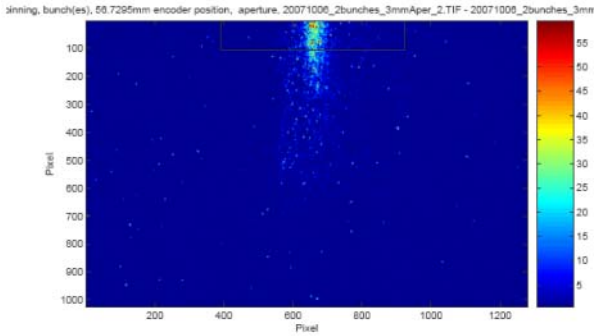

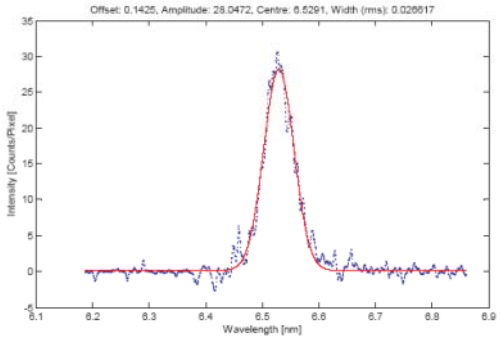

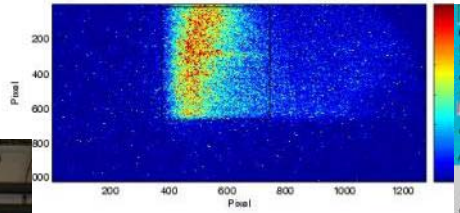

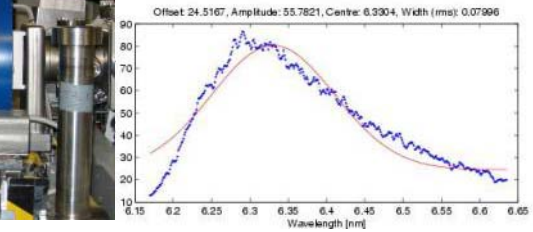

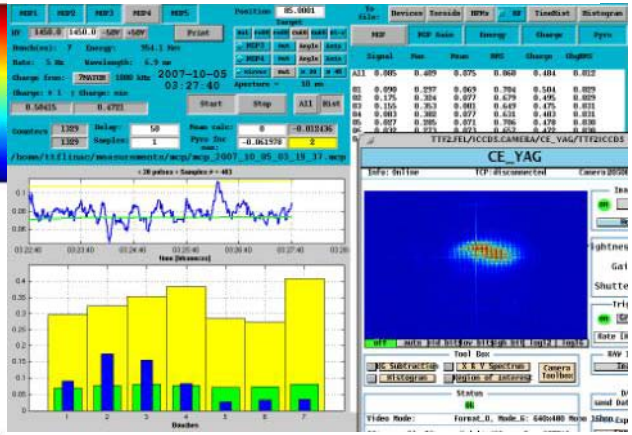

Design goals reached

FLASH
Free-Electron Laser in Hamburg

DESY TELEGRAMM 21. September 2007

Design-Strahlenergie für FLASH erreicht!
Elektronenstrahl mit 6 Modulen erstmals auf 1 GeV beschleunigt

FLASH Reaches Design Beam Energy!
Electron beam accelerated to 1 GeV with 6 modules for the first time

Der Durchbruch passierte wieder in einer Nachtschicht, genauer am 21.9.2007, um 0:57 Uhr. Dieses Mal ging es um das Erreichen der geplanten maximalen Strahlenergie. „Ziel: Betrieb mit höchster Energie – Ergebnis: 1 GeV Energie !! Gemessenes Spektrum der spontanen Emission: ~ 6,3 nm", so der Eintrag im elektronischen Logbuch.

Während der letzten Wartungspause: Einbau des Beschleunigermoduls Nr. 6 in den FLASH-Tunnel.
During the last shutdown: installation of accelerator module no. 6 in the FLASH tunnel.

As usual, the breakthrough was achieved during a night shift, to be precise: on September 21 at 0:57 a.m. This time, the aim was to reach the planned maximum beam energy. "Goal: Operation to maximum energy—Achievements: 1 GeV!! Spectrum of spontaneous emission measured: ~ 6.3 nm," reads the entry in the electronic logbook.

Das Team im Kontrollraum beobachtete im Wellenlängenspektrum der im FLASH-Undulator spontan erzeugten Strahlung zum ersten Mal eine Überhöhung im Bereich von 6 Nanometern. Damit ist der Nachweis erbracht, dass alle sechs Beschleunigermodule – eins wurde in der vergangenen Wartungspause neu installiert, ein zweites ausgetauscht – funktionieren und die Elektronenpakete wie geplant auf eine Energie von 1 Giga-Elektronen-

For the first time, the team in the control room observed a peak around 6 nanometers in the wavelength spectrum of the spontaneous radiation generated in the FLASH undulator. This is the proof that all six accelerator modules—one of which was newly installed during the previous shutdown, a second one replaced—are working as planned and accelerating the electron bunches to an energy of 1 gigaelectronvolt (GeV). The measurement of

DESY TELEGRAMM 8. Oktober 2007

Wellenlängen-Weltrekord bei FLASH: 6,5 Nanometer!
Geplanter Designwert für die Laserblitze erzielt

Wavelength World Record at FLASH: 6.5 Nanometers!
Design value for laser flashes reached

Zwei Wochen nach dem Erreichen der maximalen Strahlenergie von 1 Giga-elektronenvolt kam aus dem Kontrollraum die Meldung: „Am 4. Oktober haben wir in den Abendstunden zum ersten Mal bei FLASH das Lasen bei einer Wellenlängen von 7 Nanometern (nm) beobachtet." Schon 24 Stunden später gelang es dem FLASH-Team, den für die Anlage geplanten Designwert von 6,5 nm zu erzielen. Die in den sechs supraleitenden Modulen auf eine Energie von 986 Megaelektronenvolt beschleunigten Elektronenpakete zeigten bei ihrem Flug durch den Undulator nun auch bei dieser hohen Energie das gewünschte Verhalten: Ihre spontan

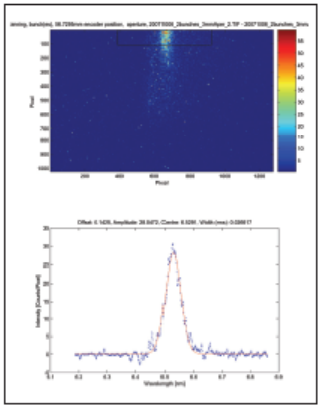

Plot und Zahlen für Experten:
Das Wellenlängenspektrum bei 6,5 nm. Zahl der Bunche: 2 - Apertur: 3 mm - Wellenlänge: 6,523 nm - Bandbreite: 0,0266 nm (rms)
Plot and numbers for experts:
the wavelength spectrum at 6.5 nm. Number of bunches: 2 - aperture: 3 mm - wavelength: 6.523 nm - bandwidth: 0.0266 nm (rms)

Two weeks after the maximum beam energy of 1 gigaelectronvolt was reached, the control room announced another milestone: "On the evening of October 4, we observed lasing at a wavelength of 7 nanometers (nm) at FLASH for the first time." Only 24 hours later, the FLASH team achieved the facility's design value of 6.5 nm. In FLASH, the electrons are accelerated to an energy of 986 megaelectronvolts in six superconducting modules. On their flight through the undulator, the electrons now demonstrated the desired behavior also at this high energy: the spontaneous radiation they emit amplified itself to form the desired free-electron laser radiation pulses (SASE-FEL).

Upgrade and commissioning of FLASH successful
thanks to hard work by the whole TTF/FLASH team

Cavity tuning

- Started: Tuesday Aug-14 morning (as soon as modules were cold)
- Frequency measurement of each cavity with a network-analyzer in the tunnel (except M6 which has cables out of the tunnel)
  → cavity tuning to resonance (1.3 GHz) and loaded Q-adjustment (Q=3E6)
- ACC1, ACC2, ACC3: Aug-14 and Aug-15 (daytime)
  - ACC1: C6 and C7 problem with tuner motors
    - C6 problem solved
    - motor of C7 has a short to ground inside the cryo module, and has to be driven by a potential free motor control
- ACC6: Aug-16 (daytime)
- ACC4 and ACC5: Friday Aug-17 until 9 pm
  - ACC5: Motors of C2,3,4,6,7 could not be started with their motor drivers
    - a special driver required to pulse for a short time a higher than usual current to give the motors an initial kick; after this, in all cases, the motors could be moved with their normal drivers to resonance
- Total time required for module hardware installations, cool down, conditioning, and cavity tuning underestimated
- Substantial amount of time saved by interleaving frequency tuning with RF and beam operation (phase adjustment, beam studies)

ACC4/5/6 phase and LLRF adjustments

- RF to ACC4, ACC5, and ACC6: Aug-20 evening
  → measurement of the phase between the modules
  → 120-150 deg difference between ACC4 and ACC5, phase of ACC4 and ACC6 almost equal
- Waveguide distribution (in the tunnel) corrected in Aug-21 morning
  → phases re-measured in the evening
  → phase difference between ACC4 and ACC5 ~ -130 deg; between ACC5 and ACC6 ~ +100 deg
- Waveguide distribution re-corrected in Aug-22 morning
  → phases re-measured in the evening
  → ~ 60 deg difference between ACC4 and ACC5/6; phase of ACC5 and ACC6 almost equal
- WG distribution corrected 3rd time in Aug-23 morning
  → phases measured in the afternoon
  → finally OK!
- Parallel to phase measurements: adjustments of phases of single cavities, signal levels, and loaded Qs

ACC4/5/6 ready for standard beam operation in Thursday Aug-23 midnight
with full gradient after conditioning: Monday Aug-27

Phase adjustment ACC4/5/6

Initial situation

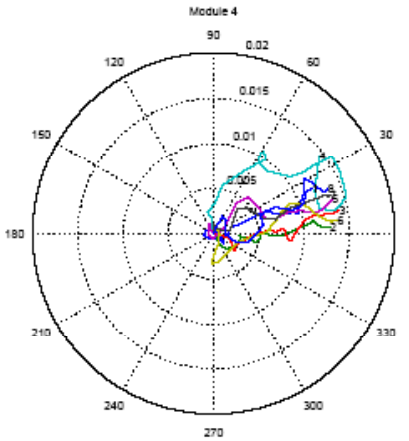

ACC4

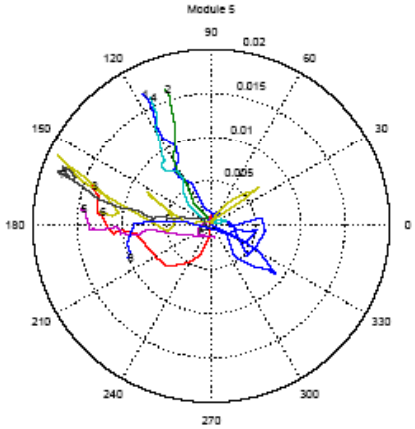

ACC5

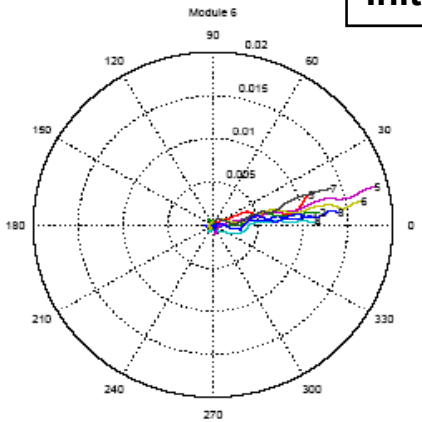

ACC6

After first iteration

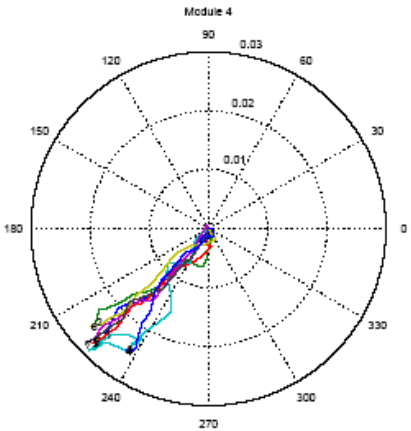

ACC4

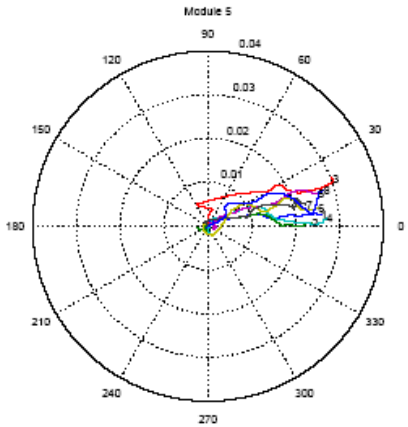

ACC5

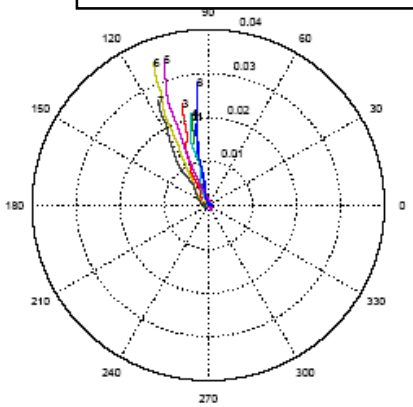

ACC6

Phase adjustment ACC4/5/6

After second iteration

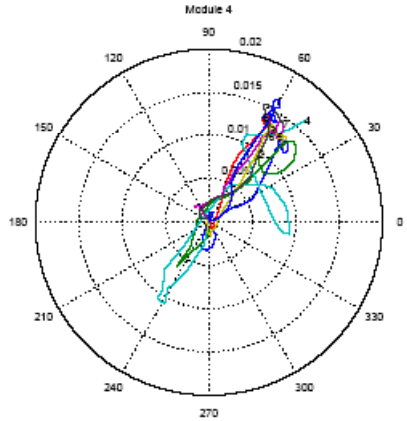

ACC4

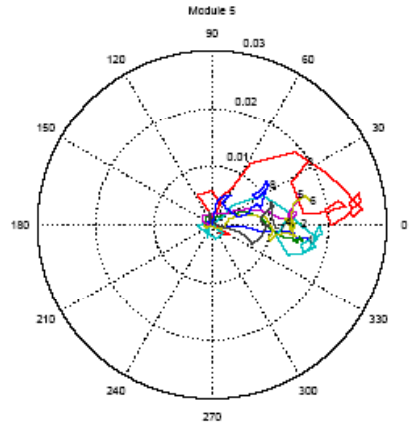

ACC5

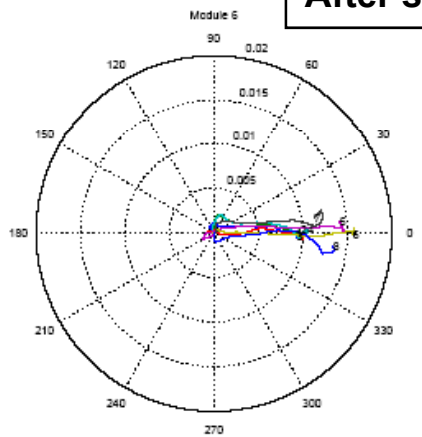

ACC6

After third iteration and LLRF adjustments

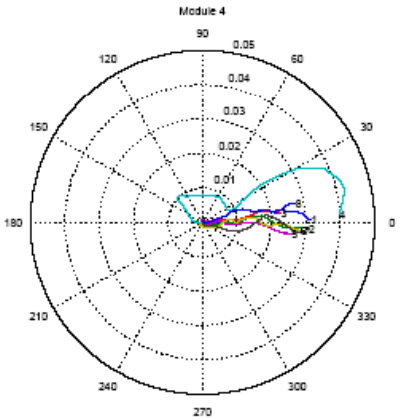

ACC4

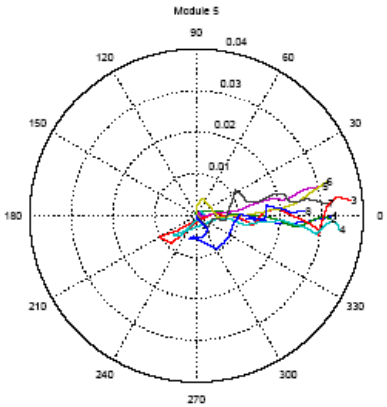

ACC5

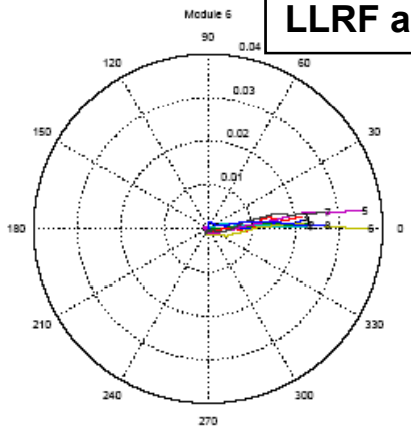

ACC6

New waveguide distribution ACC6

- A new waveguide distribution system used for ACC6 → foreseen for XFEL
- System pre-adjusted in Hall 2
- Power distribution and phase distribution for the individual cavities almost perfect

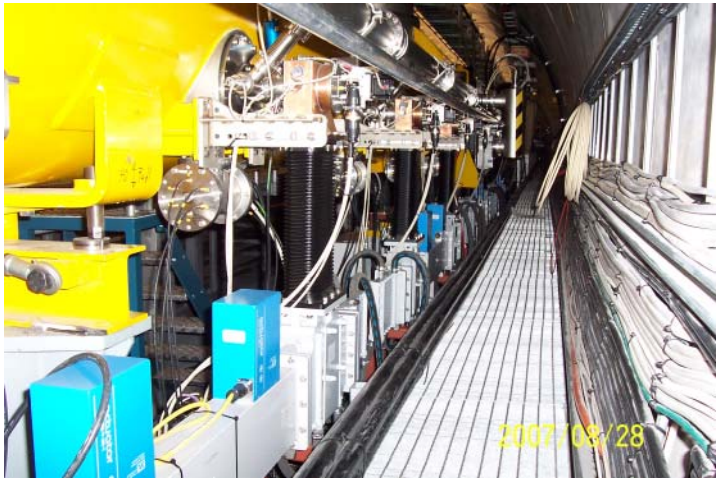

Initial phase distribution

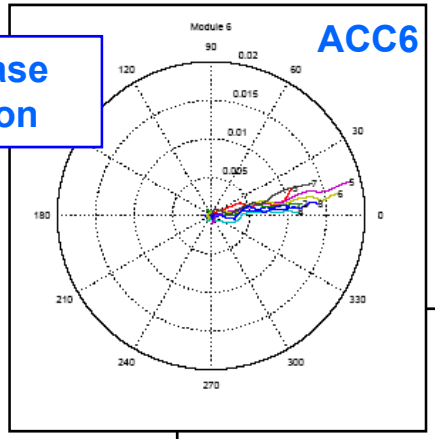

Waveguide distribution ACC6

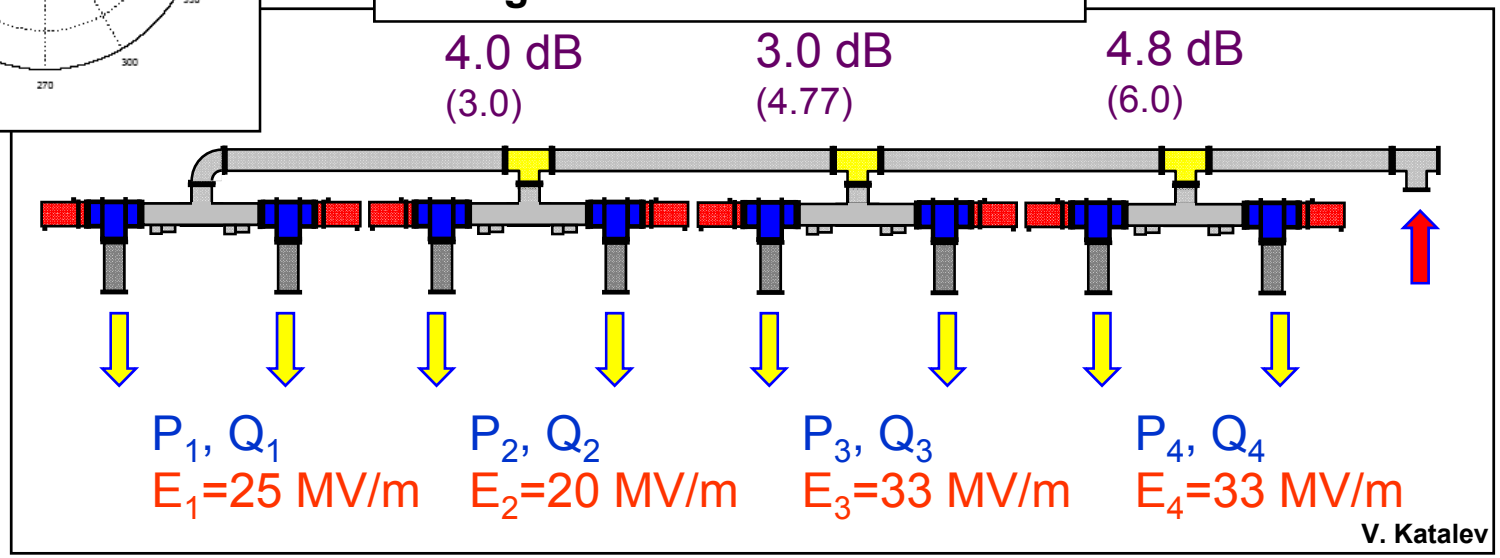

Maximum beam energy

- ~ 970 MeV electron beam through the undulator to the dump: Sep-9 evening
- 1 GeV beam energy reached for the first time in the night Sep-18/19
- 1 GeV energy confirmed by measuring the spectrum of the spontaneous radiation: Sep-21 at 2 am
- Note: to reach 1 GeV, modules are tuned individually to their limits

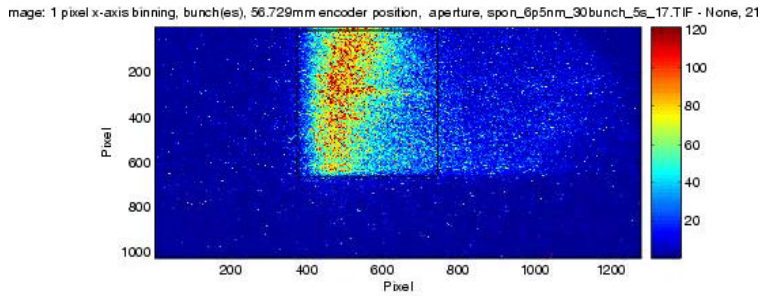

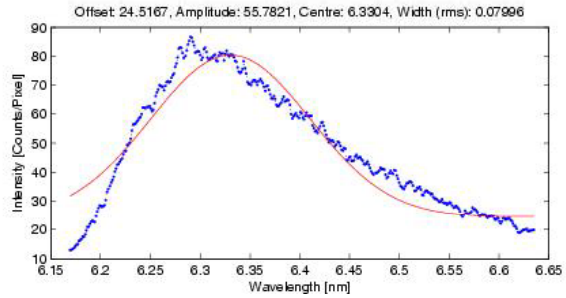

Energy server display

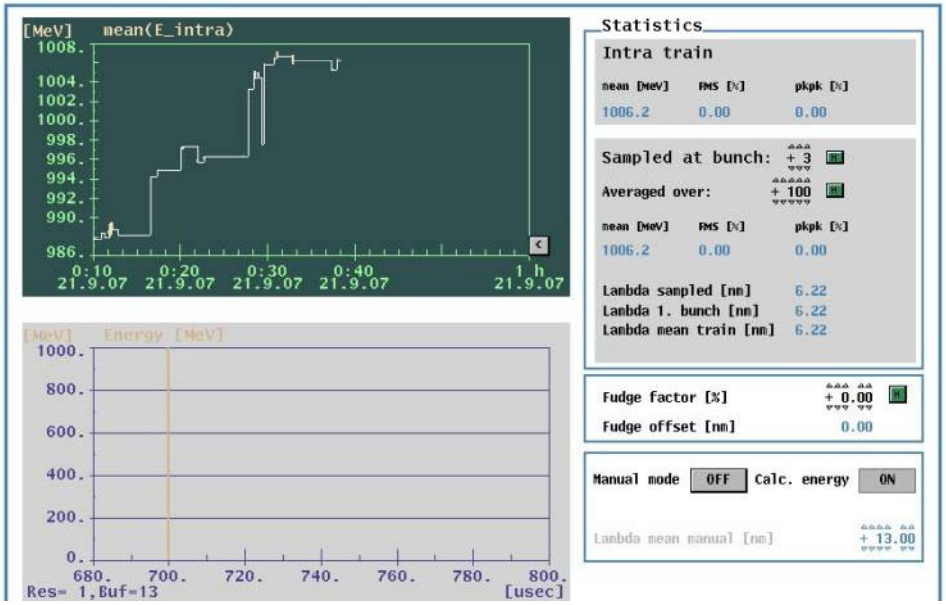

SASE

- First trial to establish lasing after the shutdown (Sep-4/5) successful
  → Lasing at ~13.5 nm (~6 uJ average) established within two shifts
- One week, starting Oct-2 after the maintenance, scheduled for lasing at the shortest possible wavelength
  → lasing at 6.9 nm Oct-4 evening
  → lasing at 6.5 nm Oct-5 afternoon
  – Level ~ 1 uJ (detectors not yet calibrated)

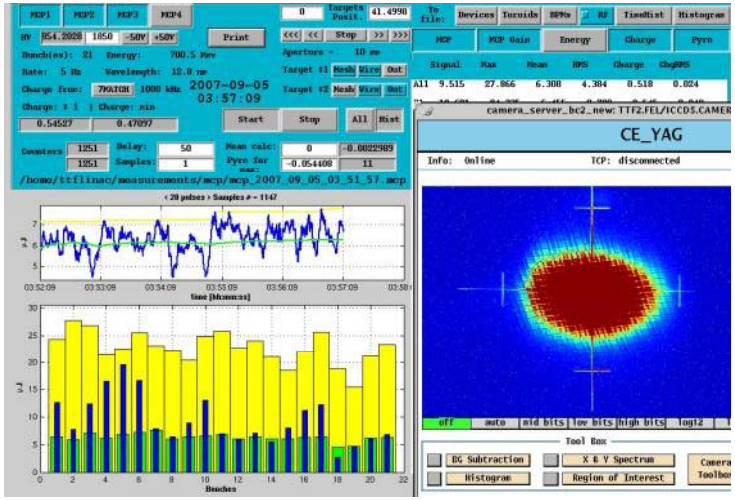

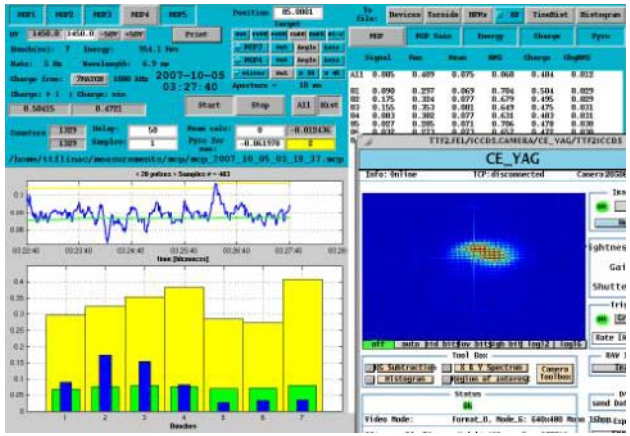

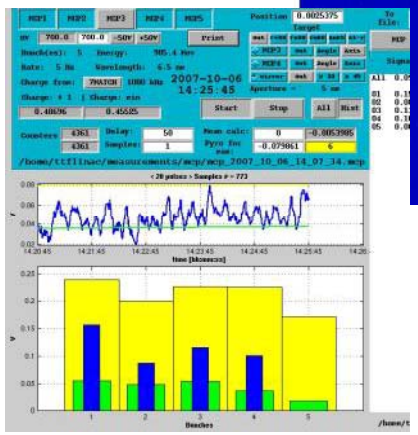

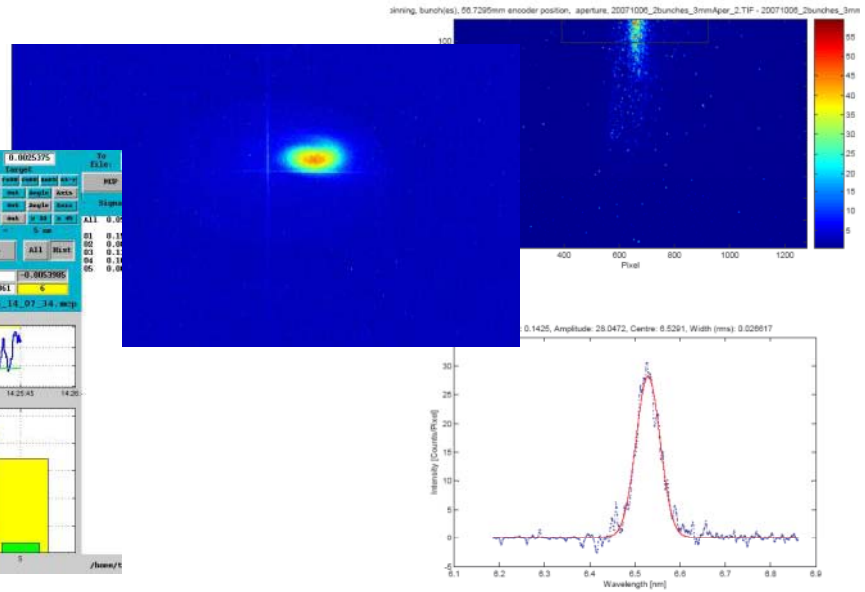

SASE

- First trial to establish lasing after the shutdown (Sep-4/5) successful
  → Lasing at ~13.5 nm (~6 uJ average) established within two shifts
- One week, starting Oct-2 after the maintenance, scheduled for lasing at the shortest possible wavelength
  → lasing at 6.9 nm Oct-4 evening
  → lasing at 6.5 nm Oct-5 afternoon
  – Level ~ 1 uJ (detectors not yet calibrated)

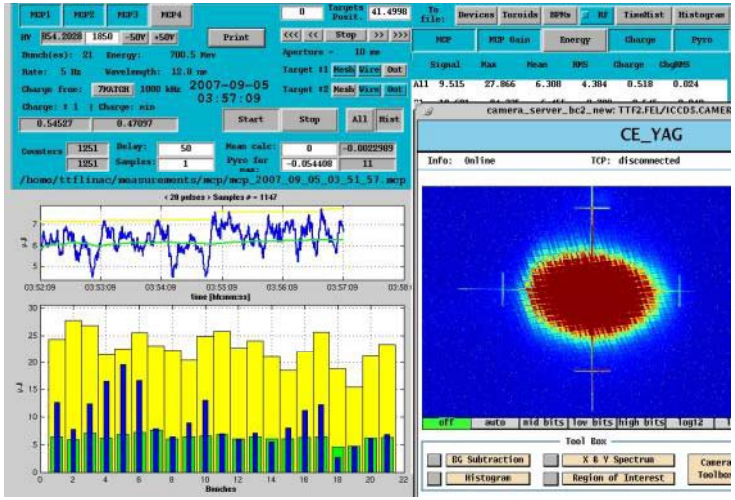

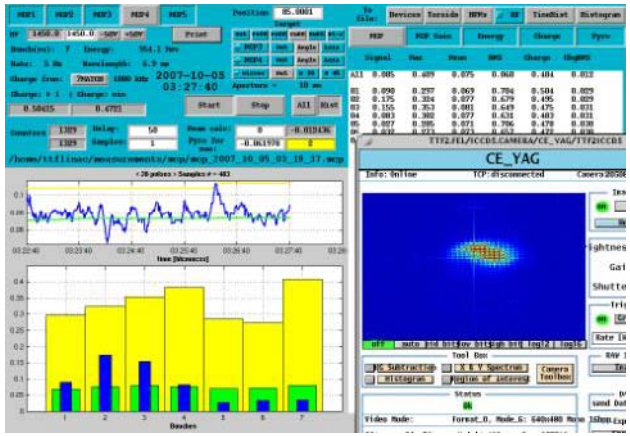

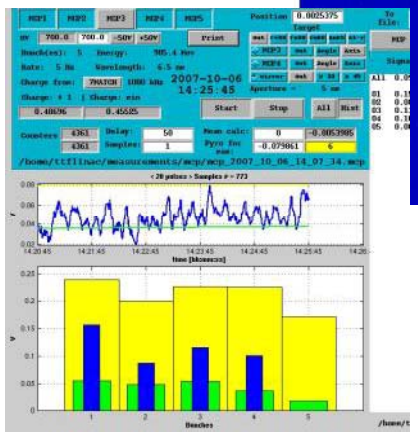

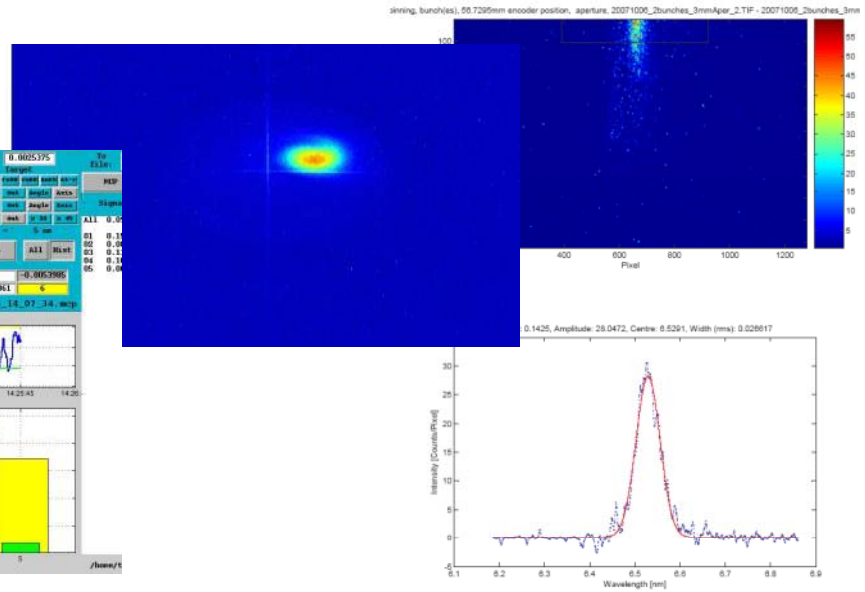

FLASH: Gradient Calibration (Achieved Gradients

Energy (MeV)	ACC1	ACC2	ACC3	ACC4	ACC5	ACC6	
Cavity 1	13.2	16.7	25.6	21.0	20.5	29.1	
Cavity 2	12.9	13.4	25.8	20.6	19.8	28.9	
Cavity 3	12.6	19.2	25.7	21.3	19.9	30.3	
Cavity 4	13.1	18.6	25.9	20.1	20.0	29.0	
Cavity 5	19.2	18.7	25.7	21.1	20.5	20.0	
Cavity 6	20.0	15.0	25.3	21.1	20.7	20.5	
Cavity 7	13.3	18.5	25.3	20.6	20.2	23.4	
Cavity 8	19.9	19.4	26.0	20.4	19.7	23.5	
sum	124.2	139.5	205.3	166.2	161.3	204.7	1001.2

Machine Studies at FLASH

Flash Schedule

- Commissioning 02.07.2007 - 12.08.2007 42 days
- FEL Studies 13.08.2007 - 02.09.2007 21 days
- **Accelerator Studies 03.09.2007 - 30.09.2007 28 days**
- FEL Studies 01.10.2007 - 18.11.2007 49 days
- **1. Beamtime** 19.11.2007 - 23.12.2007 35 days
- Maintenance 24.12.2007 - 06.01.2007 14 days

Flash Schedule 2008

Accelerator Studies	**07.01.2008 - 20.01.2008**	**14 days**
FEL Studies	21.01.2008 - 10.02.2008	21 days
2. Beamtime	11.02.2008 - 09.03.2008	28 days
FEL Studies	10.03.2008 - 30.03.2008	21 days
3. Beamtime	31.03.2008 - 27.04.2008	28 days
Maintenance	28.04.2008 - 18.05.2008	21 days
FEL Studies	19.05.2008 - 08.06.2008	21 days
4. Beamtime	09.06.2008 - 06.07.2008	28 days
FEL Studies	07.07.2008 - 27.07.2008	21 days
5. Beamtime	28.07.2008 - 24.08.2008	28 days
Accelerator Studies	**25.08.2008 - 14.09.2008**	**21 days**
FEL Studies	15.09.2008 - 05.10.2008	21 days
6. Beamtime	06.10.2008 - 02.11.2008	28 days
FEL Studies	03.11.2008 - 23.11.2008	21 days
7. Beamtime	24.11.2008 - 21.12.2008	28 days
Shutdown	22.12.2008 - 15.03.2009	84 days

LLRF Studies Sep. 2007 (1)

- Test of Multichannel Downconverter for LLRF Matthias Hoffmann
- Beam based beam loading compensation at ACC1 Elmar Vogel
- Beam based ACC1 rf field stability measurement using BC2 beam diagnostics Elmar Vogel
- Multicavity Complex Controller (MCC) Tomasz Czarski
- Vector-Sum Calibration with Beam and Beam Diagnostics Valeri Ayvazyan
- For./ref. rf power cal, w/wout beam, probe calculation Waldemar Koprek
- Multi-bunch transient detection with different electronics Petr Morozov
- Grad./phase calibration with full beam loading Valeri Ayvazyan
- Operation at different gradients (gradient spread) Valeri Ayvazyan
- Operation close to limits (klystron saturation., cavity/coupler limit) Wojciech Cichalewski
- Beam Based RF Amplitude and Phase Calibrations Valeri Ayvazyan

LLRF Studies Sep. 2007 (2)

- Radiation effects on electronics Mariusz Grecki
- Physical System Parameters Identification Christian Schmidt
- Off-crest operation in ACC456 Valeri Ayvazyan
- Performance evaluation of ILC Americas No. 1 LLRF Controller Gustavo Cancelo
- Evaluate ILC America No. 1 Downconverter and Vectormodulator Brian Chase
- Performance evaluation of new FLASH MO and Distr. with beam Henning Weddig
- Evaluation of Operational Procedures for Automation Wojciech Cichalewski
- Test of Components needed for Automation Boguslaw Koseda
- Operation of universal controller Wojciech Jalmuzna
- Test of new features in LLRF controller at ACC1 Waldemar Koprek

Downconverter

Multichannel Packaging and Preprocessing

Receiver frontend :

- Shielded subsections
- Strong AGND to RF GND connections
- Frontend mixer types easily changeable

(Applications:
Bunch-arrival-monitors,
Beam-position-monitors,
Beam-based feedback,
LLRF passive-active)

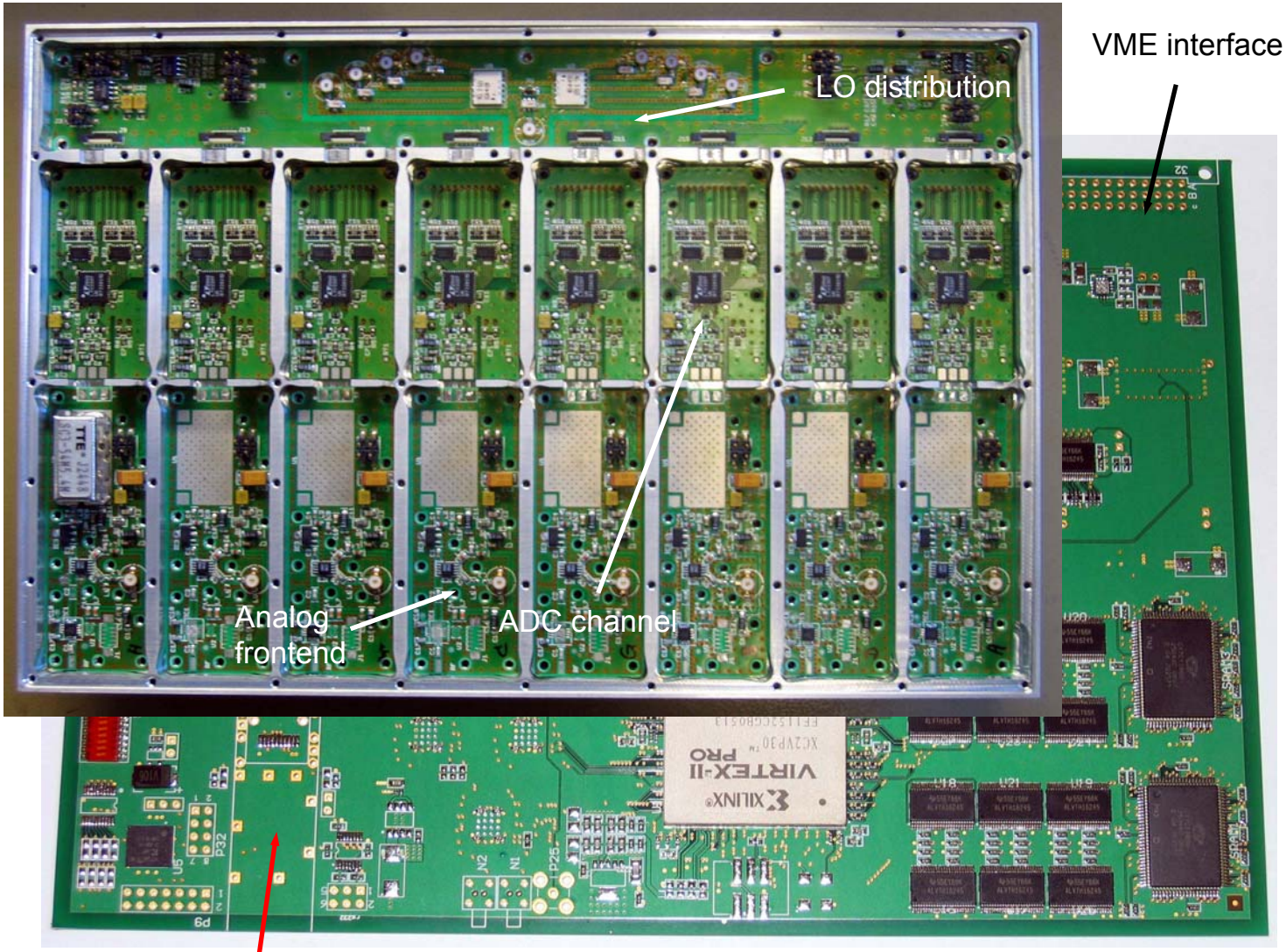

Digital motherboard (ACB 2.0):

- Provides IQ-detection and Fiber interface to controller

Single channel performance at FLASH

- **FLASH injector :**

Biased by MO reference :

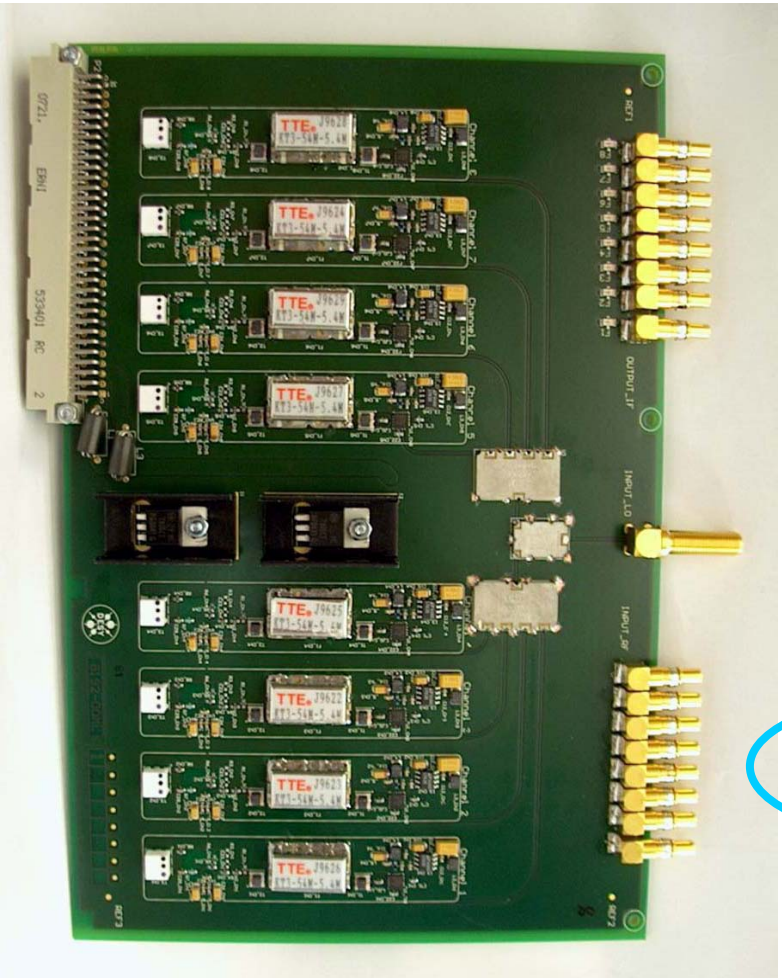

BW=27MHz
BW=1MHz

ΔA 3 = 9.3377e-4
ΔA 81= 1.4942e-4
ΔP 3 = 0.0654 deg
ΔP 81= 0.0092 deg

BW=1MHz
BW=1MHz

ΔA = 1.6263e-004
ΔP = 0.0147 deg

+ SIMCON DSP

81 samples over 1 us
→ 1 IQ value
→ **~5 Hz through 10 minutes**

- **Shortterm stability 800us (bunch-to-bunch):**

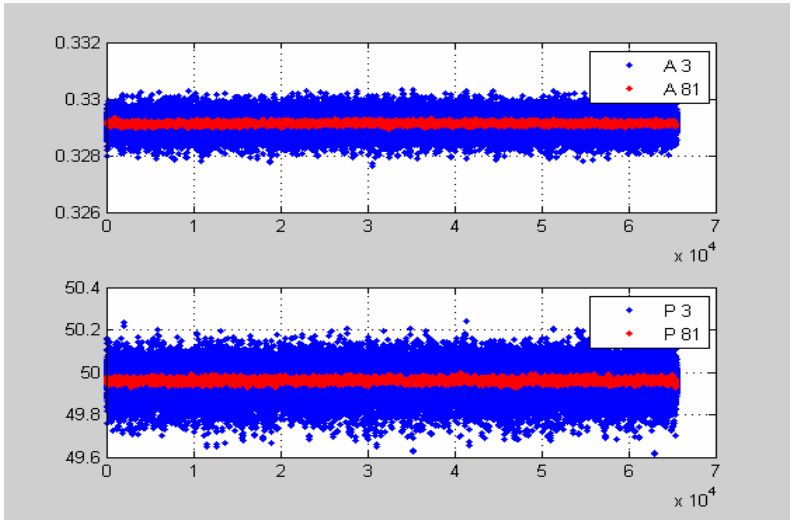

- **Midterm stability 10min (pulse-to-pulse):**

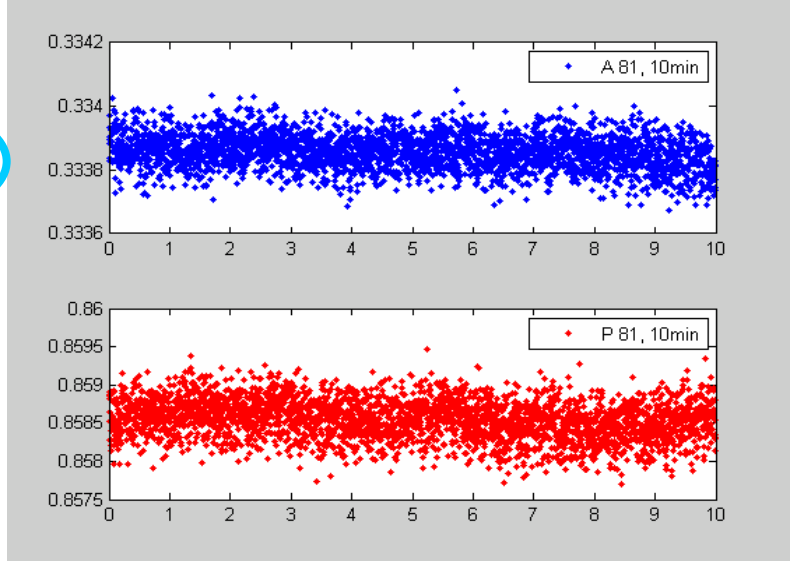

Summary of ACC1 beam stability at FLASH

- **IQ sampling down converter :**

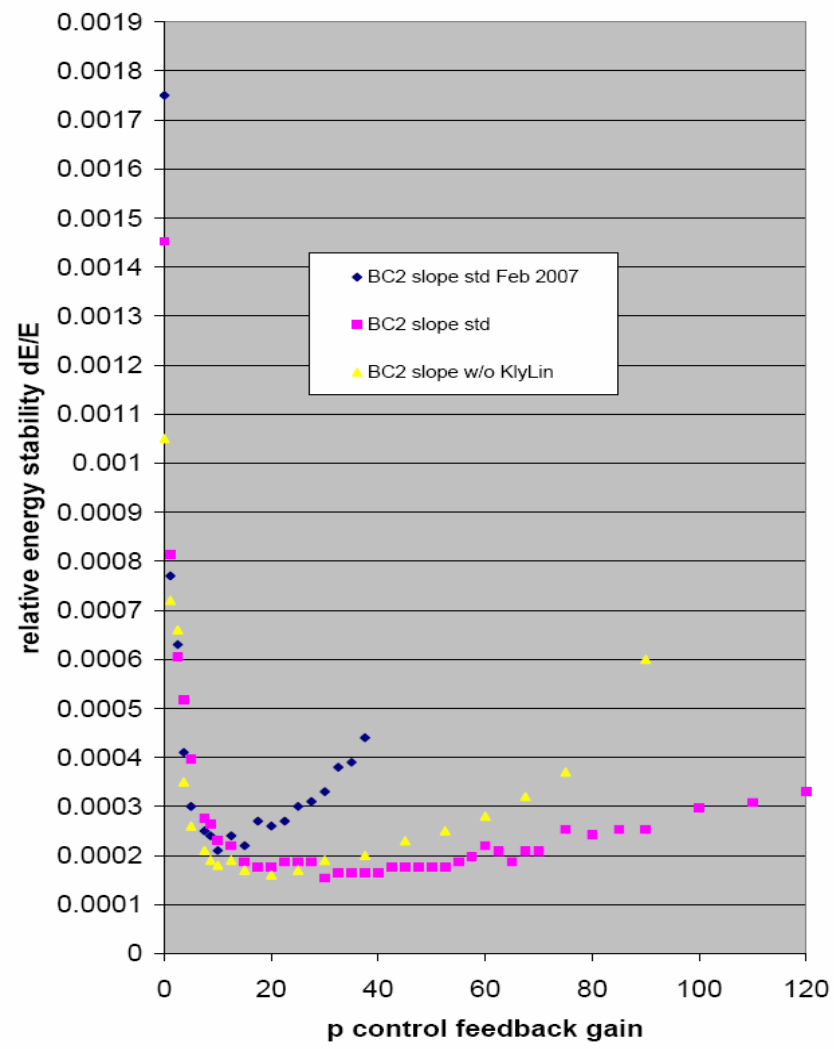

- **IF sampling down converters :**

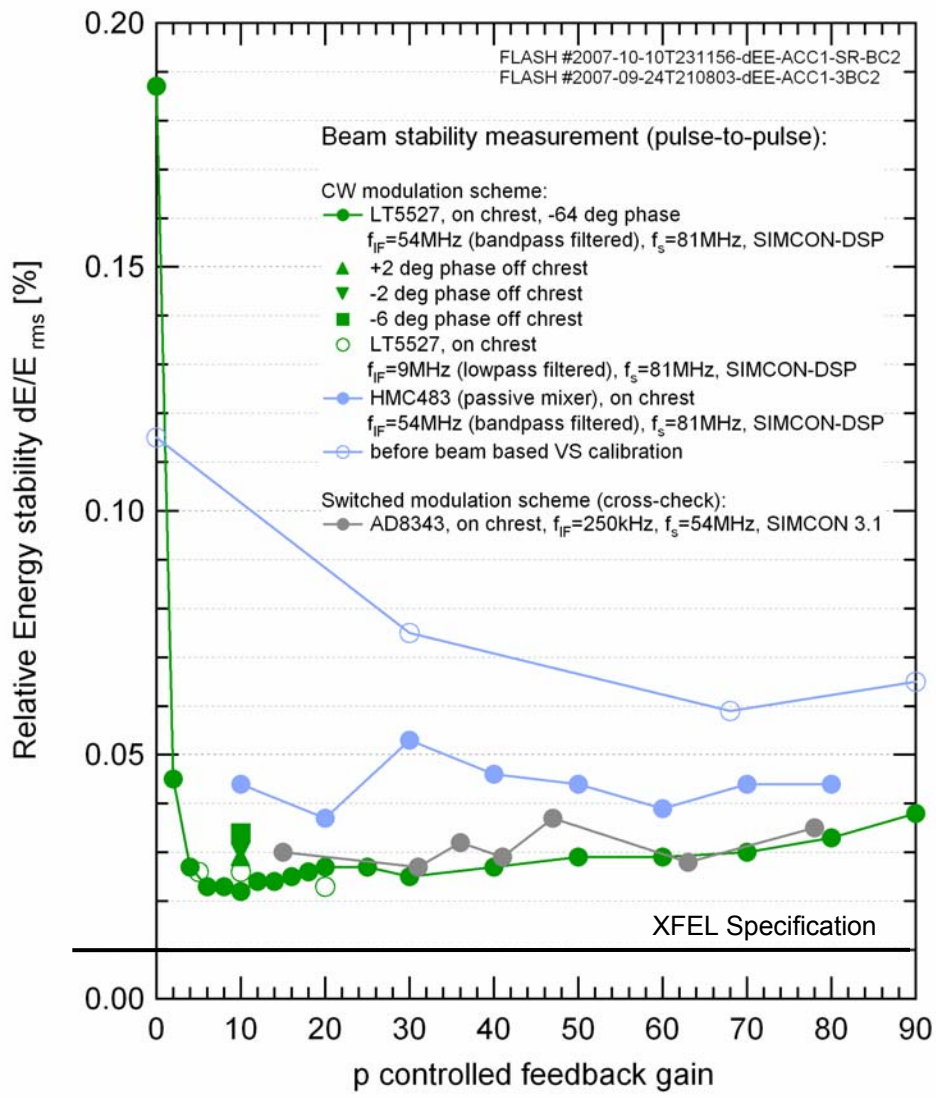

Piezotuner

Detuning compensation system

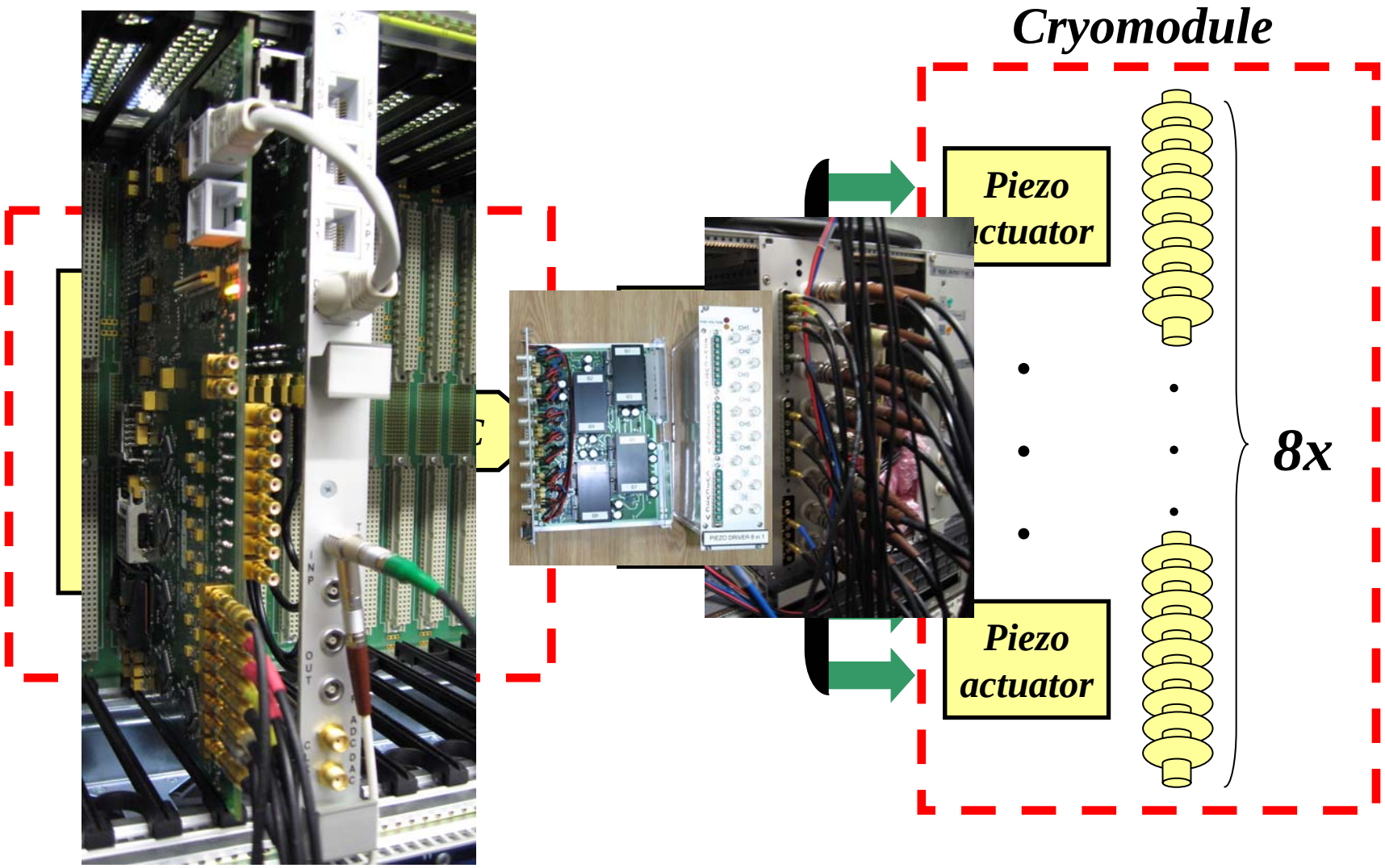

8 channels Piezo Driver

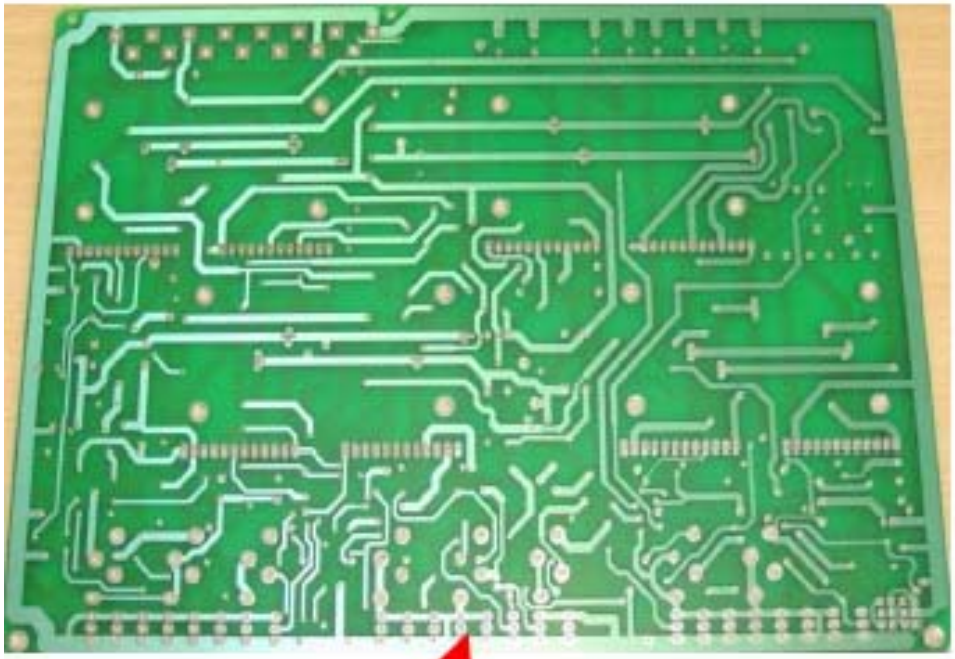

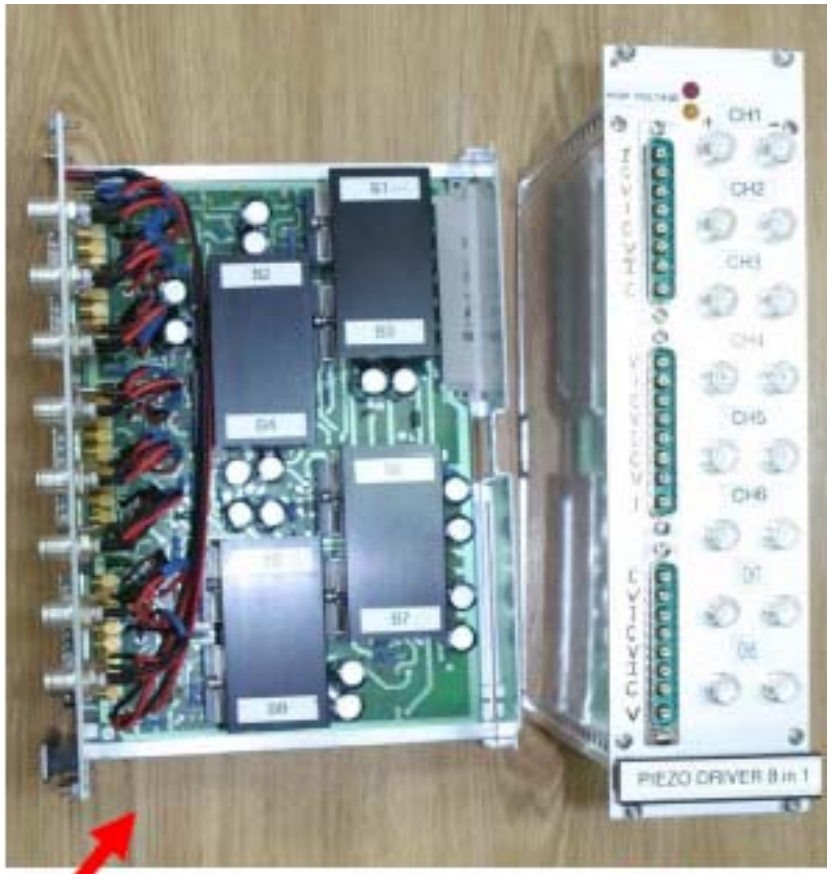

PCB board

Inside PZD box

PZD box

Results(1)

- ACC6 LFD compensation
  - (SP 22 MV/m, Pfor = 280 kW, Trg = 5 Hz)

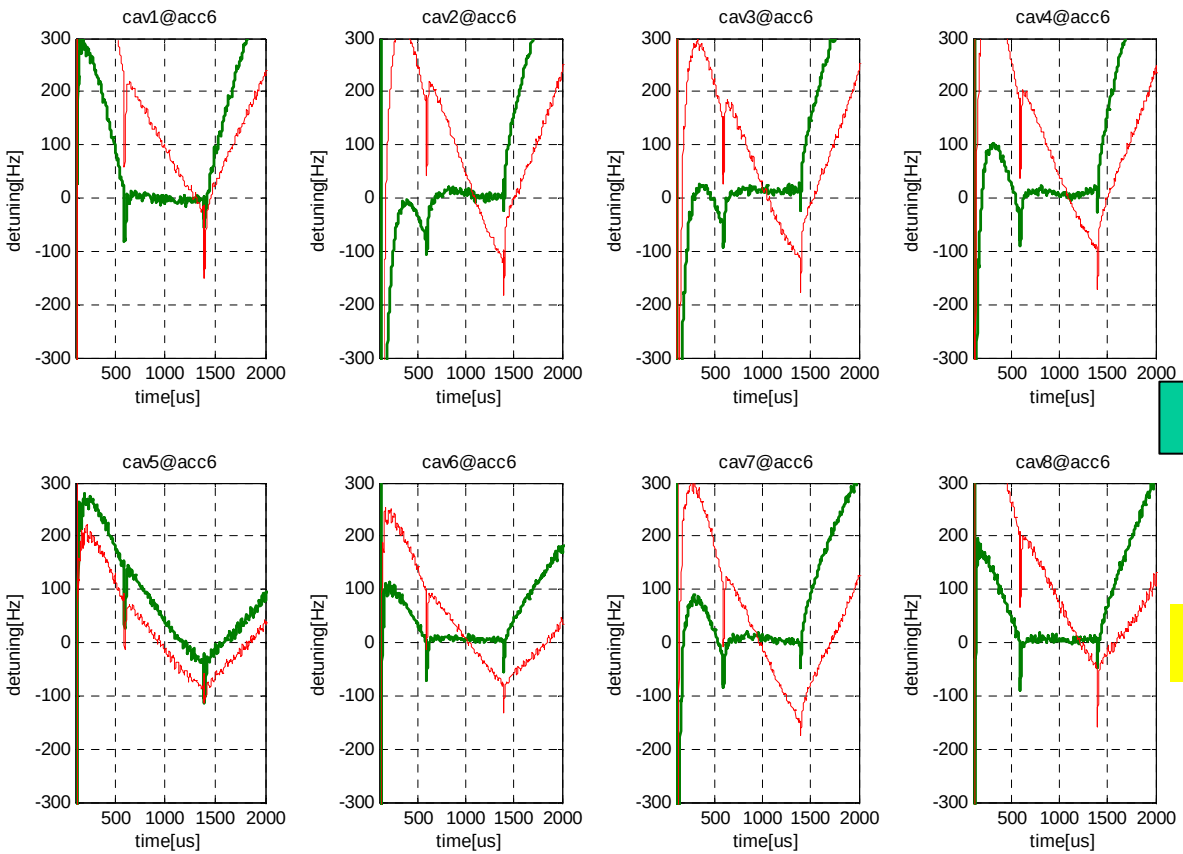

Cav(1-3)
Amp: 34V
Dly: -4100 us

Cav(4-8)
Amp: 23V
Dly: -4000us

(Amp,Dly)

problem with tuner assembling

Piezo Detuning in FLASH ACC6

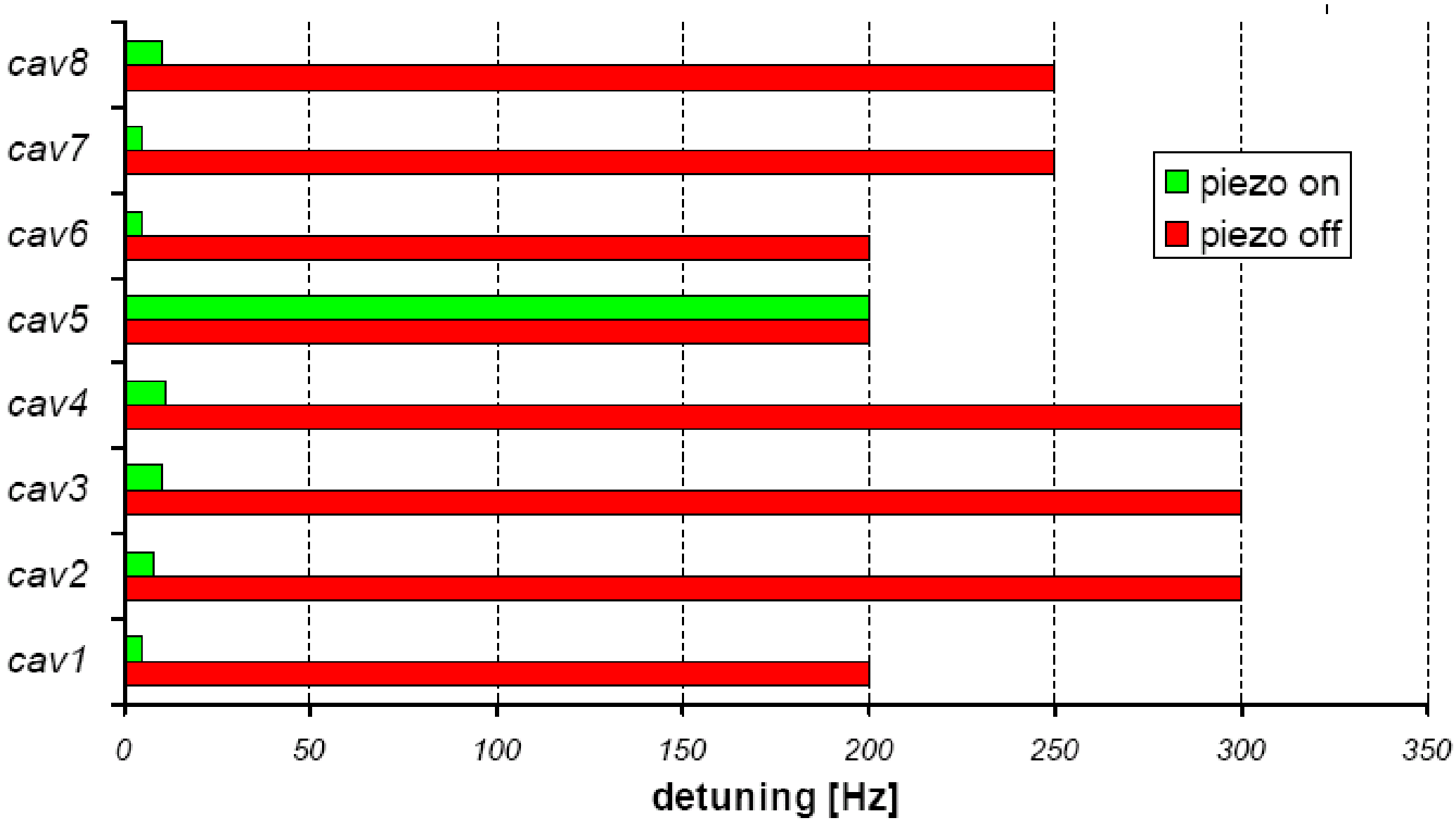

Single Bunch Transient Detection

Beam phase measurement with single bunch

Why we need beam phase measurement in cavities :

- linac cavities RF phase setup with low beam charge
- save and stable operation

Two new methods are in research :

- absolute beam phase measurement
- relative beam phase measurement

Absolute beam phase measurement

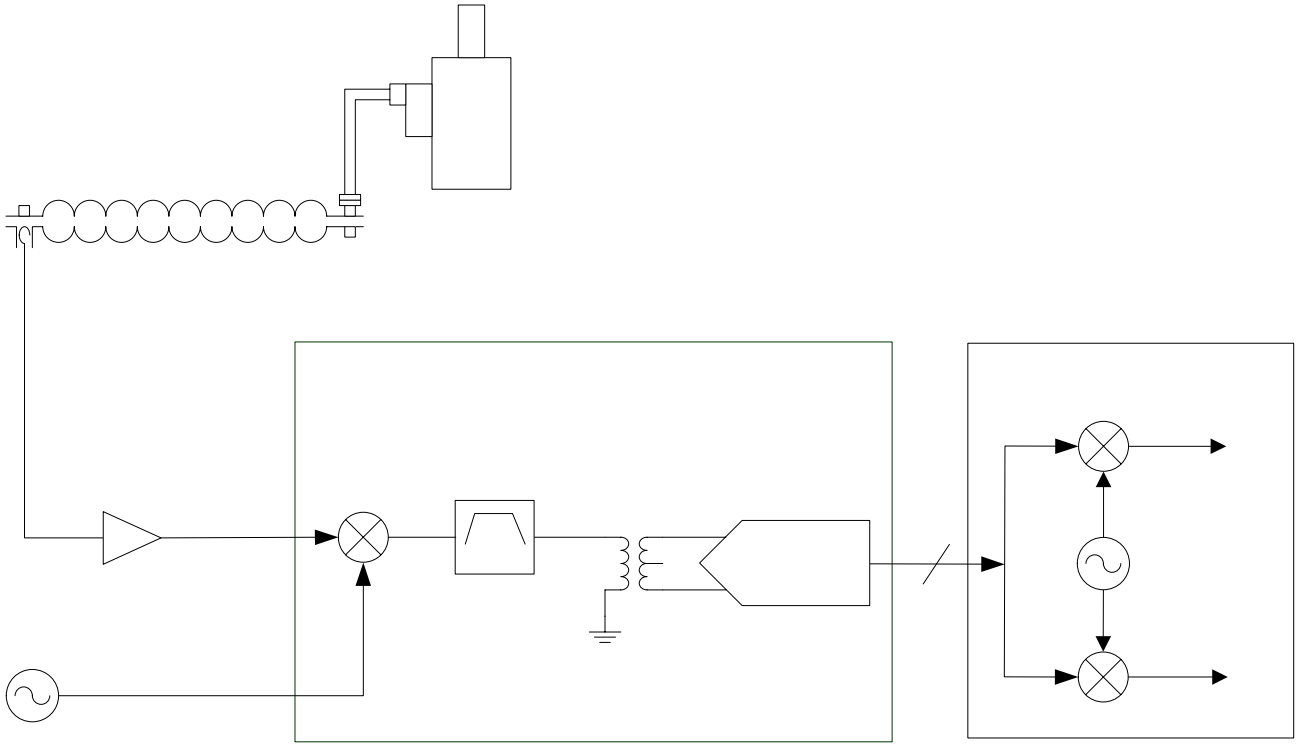

Measurement setup :

- variable gain amplifier: -70 dB to +50 dB
- new downconverter, IF 54MHz
- Advanced-Carrier-Board (ACB2.0), based on FPGA
- Matlab for I/Q calculation

Cavity

Measurement procedure

1. Measurement conditions :

RF - on
Beam - off

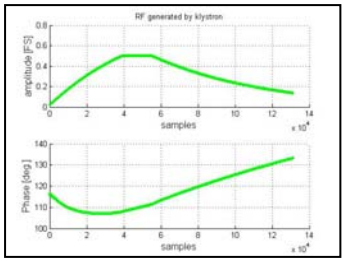

calculation

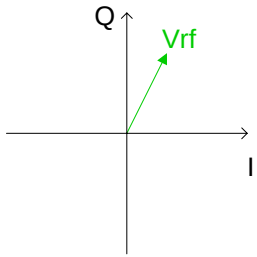

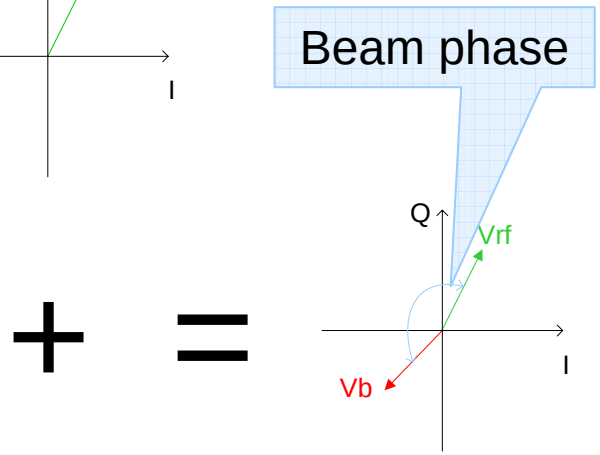

+ =

2. Measurement conditions :

RF - off
Beam - on

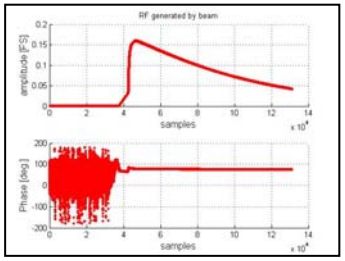

calculation

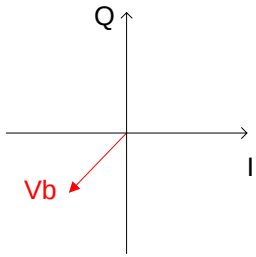

Relative beam phase measurement

- The method is based on measurements of RF generated by klystron (1.3 GHz) and Higher Order Mode excited by electron beam (2.4 GHz).
- For calibration of this measurement can be used absolute beam phase measurement results.

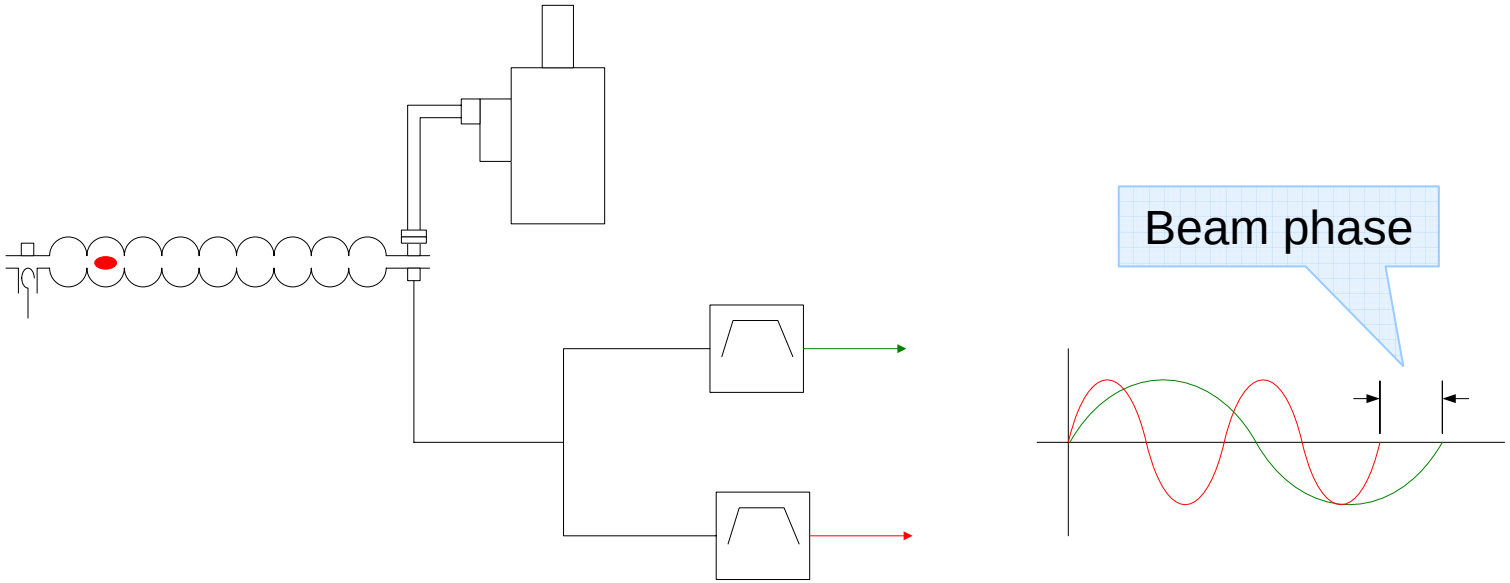

Expected results

- higher accuracy
- faster calibration
- single bunch phase measurement
- beam phase monitoring in start-up and run time

Alternating Gradient Operation

Goal

- Establish the possibility of operating the cavities with two gradient levels (pulse to pulse and intra pulse) so that they can be run at high gradient along with (during) SASE operation.

- This will allow for
  - Gaining operating experience at high gradient over long periods of time
  - The possibility of working on the second ramp during FEL runs (needs to be shown that we can do this without disrupting experimental program)

Two Ramp Modes

- Alternate SASE (lower gradient ramp) with a high gradient ramp
- Have a ramp with two levels, 1st for SASE, then going to higher gradient on the same pulse (but usually shorter flat time)
- Possibility of combining both of these (though not clear would want to)

Two Ramp Modes (2)

SASE

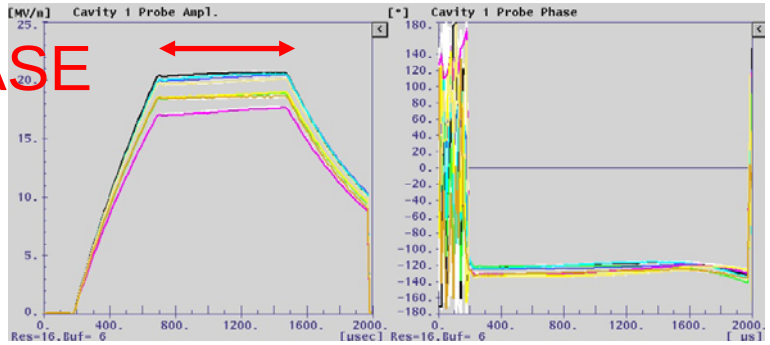

Alternate SASE, standard mode of operation

SASE

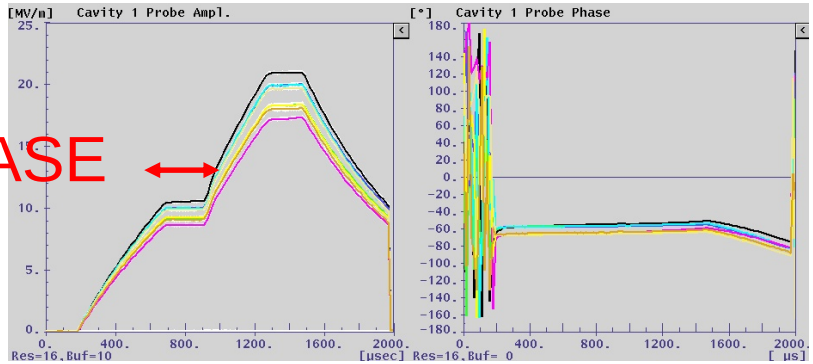

Ramp with two levels, 1st for SASE
Variable RF pulse length

11.08.2006 12:59

SASE level with alternating pulses. First pulse with beam, second pulse without beam and with 2 level of gradients. The SASE level is the same as with one pulse mode operation (see picture at 12:51).

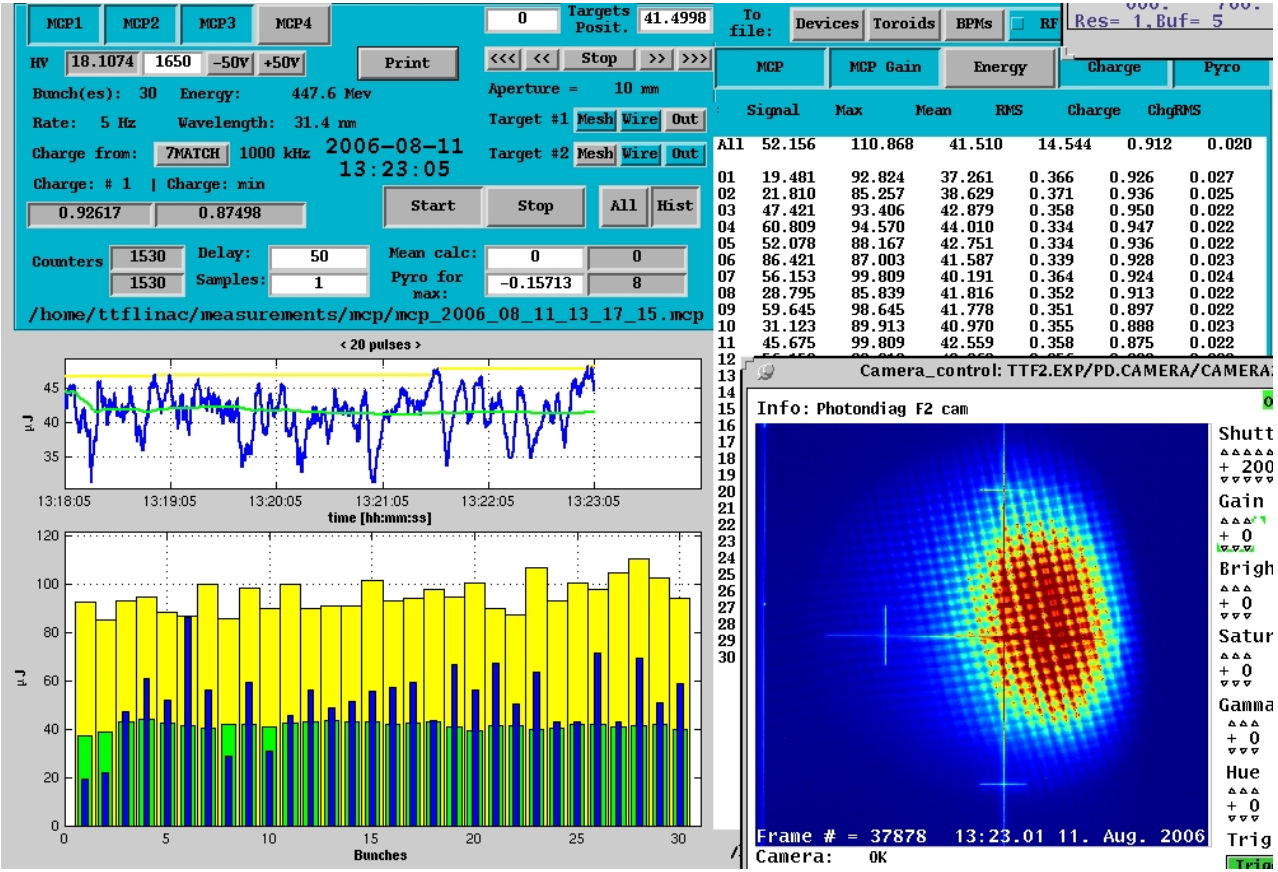

Controller

Controller

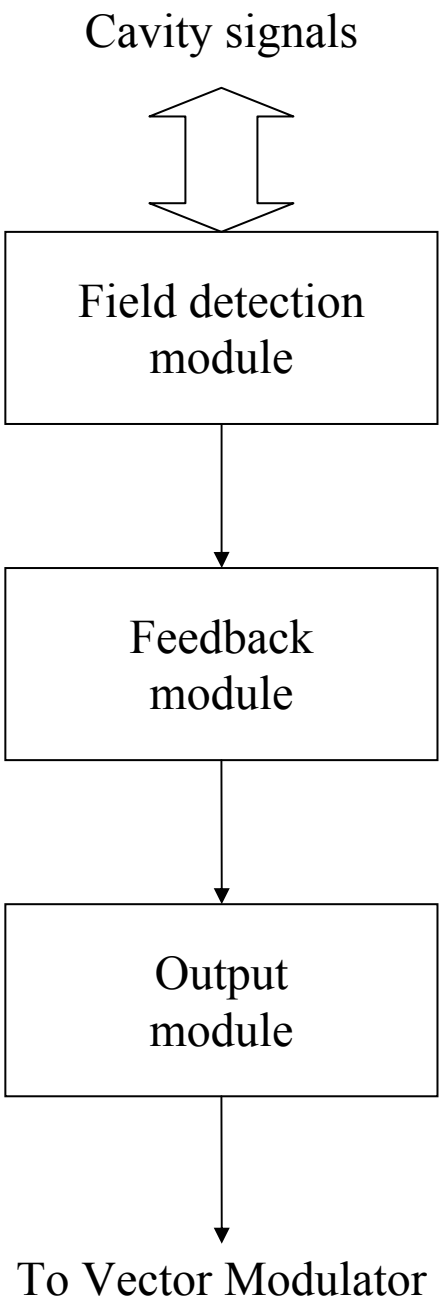

Computation Pipe of the controller

- detection of the components of the field
  - I-Q
  - Amplitude-Q

- parametrized control function
  - P-I
  - MIMO

- output corrections
  - klystron chain linearization
  - beam load compensation
  - AFF
  - etc.

Controller

supported features

Normal mode:
- I-Q field detection
- A-Q field detection
- Adaptive Feedforward
- klystron linearization
- beam load compensation
- embedded platform integration
- DSP processor support

The prototype version of the FPGA based controller have been permanently installed in ACC1 and is working more than 1 year

Measurement mode:
- Self Excited Loop (SEL) with amplitude limiter
- frequency sweep mode

It is also possible to use CW mode.

Vector sum control of 7 cavities (MST)
Feed Forward and Feedback mode (gain=100)

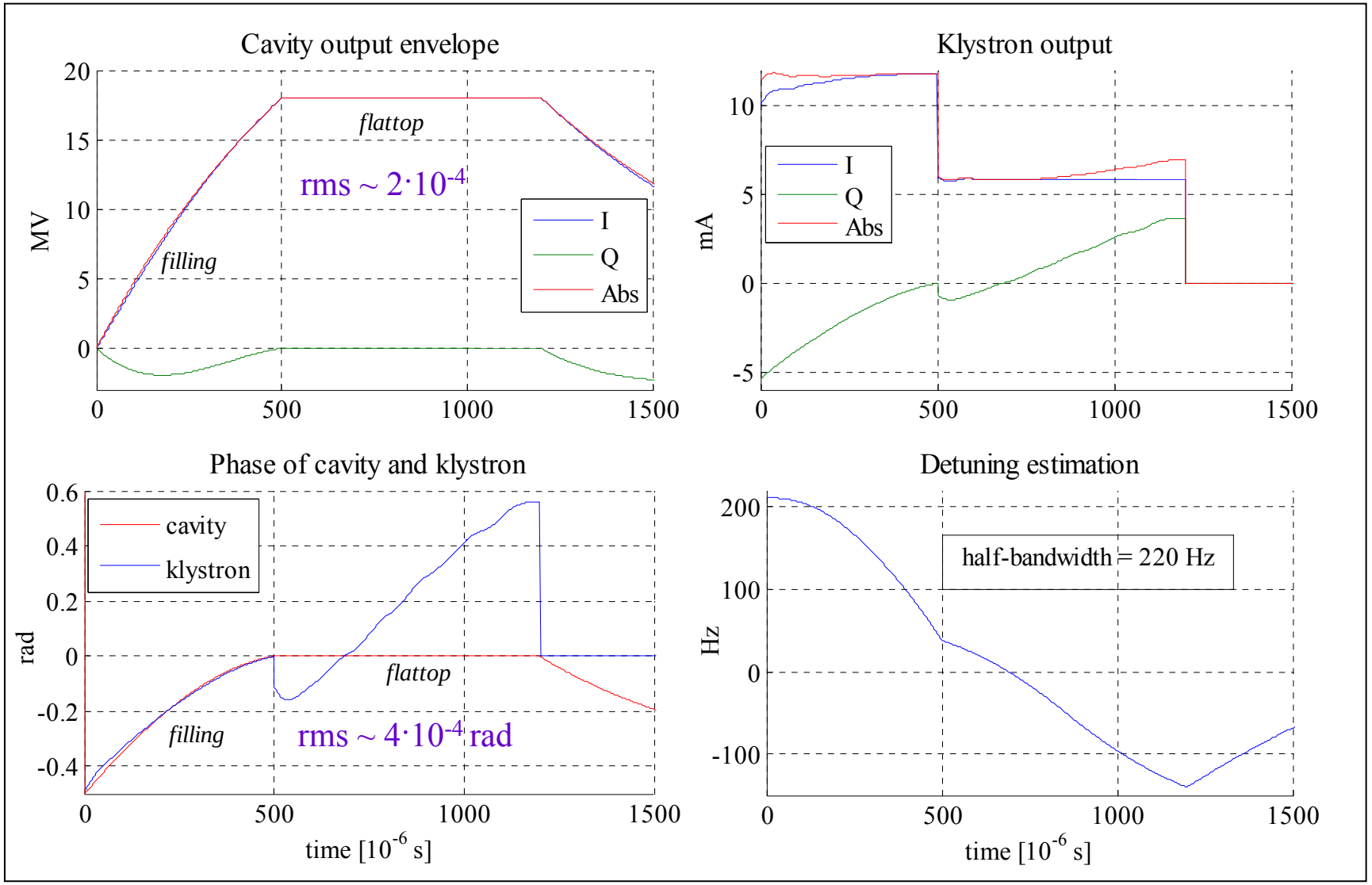

Schematic View of the LLRF Control System

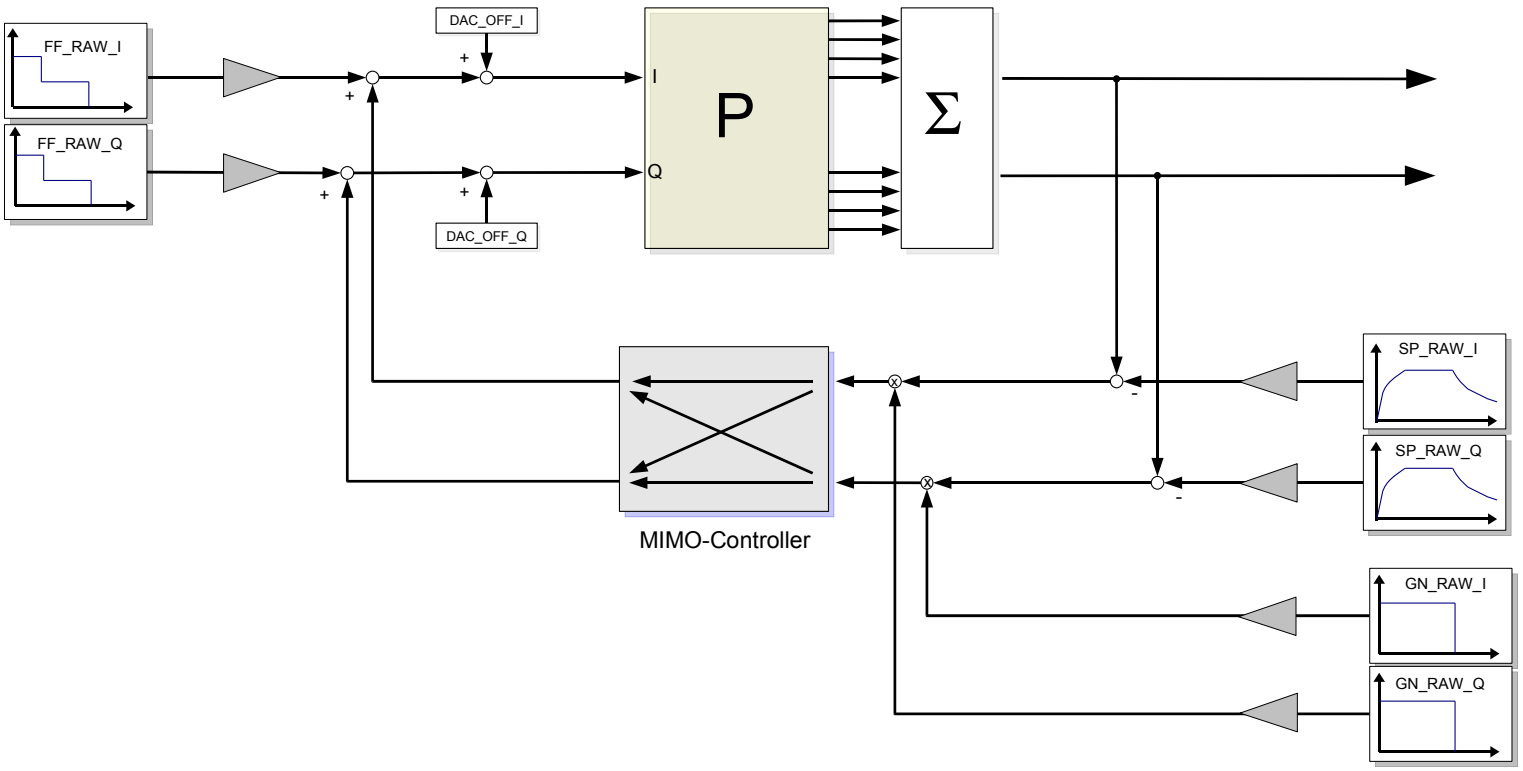

Figure: Control system Schematic with Feedforward,Setpoint and Gain Table additions. P denotes our plant providing system information and supports the analog part of the control system

MIMO-Controller Structure

- so far a decentralized P Controller is used
- new FPGA implemented controller is given by:

$$K(z) = \begin{pmatrix} K_{11}(z) & K_{21}(z) \\ K_{12}(z) & K_{22}(z) \end{pmatrix}$$

with the elements

$$K_{ij}(z) = k_{ij} \frac{a_{ij} \cdot z^{-1} + b_{ij} \cdot z^{-2}}{c_{ij} \cdot z^{-1} + d_{ij} \cdot z^{-2}} \, .$$

- tuning 20 manually is not possible for users
- parameter estimation can be found by solving H_∞ with HIFOO[1]

[1] J. V. Burke, *HIFOO - A matlab package for fixed-order controller design and H_∞ optimization*, Proceedings of 5th IFAC, 2006

Design Objectives

RF field flatness during the flattop is the desired goal

- perfect tracking (reference = output)
  - only possible for low frequencies due to system physics
  - high loop gain amplifies also disturbances
  - complementary sensitivity $T(s)$
- disturbance rejection
  - high frequency noise is filtered by lowpass characteristics
  - good suppression demands small feedback gain
  - sensitivity $S(s)$

but

$S(s) + T(s) = I$

$\curvearrowright$ therefore weighting filters need to be introduces to shape the closed loop behavior

Automation

Proposed Approach

Required capabilities of the automation:

- **To automate routine operators tasks.**
- **To adapt to unpredictably changing conditions of underlying hardware.**
- **To recover the subsystem from known faults.**

Specifies patterns of system readouts that are categorized as an exceptions. There are recognized warnings, interrupts (solvable exceptions) and faults (which stop the automation).

Assures deadlock-free cooperation of both software modules (Verified with the SPIN model checker)

Specifies finite-state model of the automation scheme for operator's tasks. Allows for definition of formal safety and liveness properties of the model. Is automatically translated to the input language of the NuSMV model checker for verification of formal properties

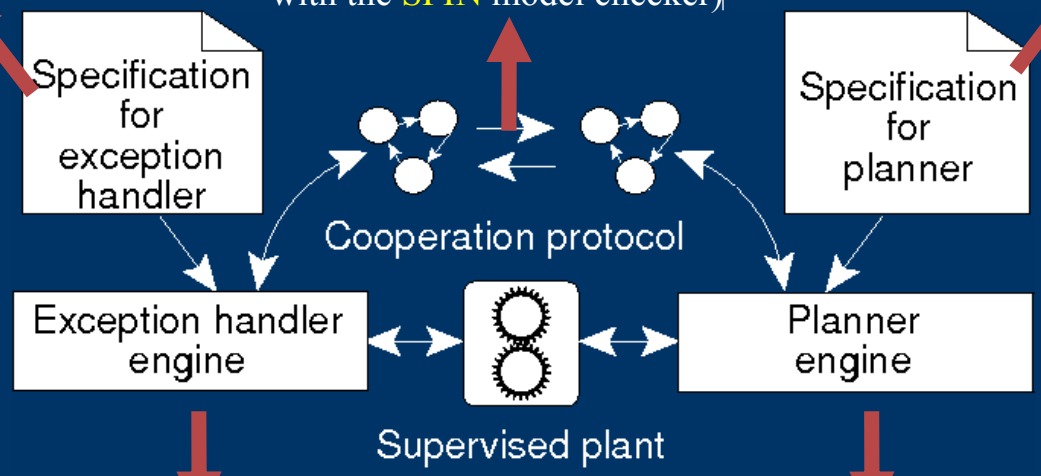

Recovers the subsystem from specified faults.
Stops automation when something critical happens.
Warns the operators about incomming problems.

Automates routine operators tasks.
Adapts to unpredictably changing conditions of underlying hardware.

Warm up

Working Out the Specification

- **Procedure targets**
- **Procedure prerequisites - functional**
- **Procedure prerequisites - not functional (e.g. safety)**
- **Independent conditions guarged by the exception handler**
- **Independent assertions - not exceptions**

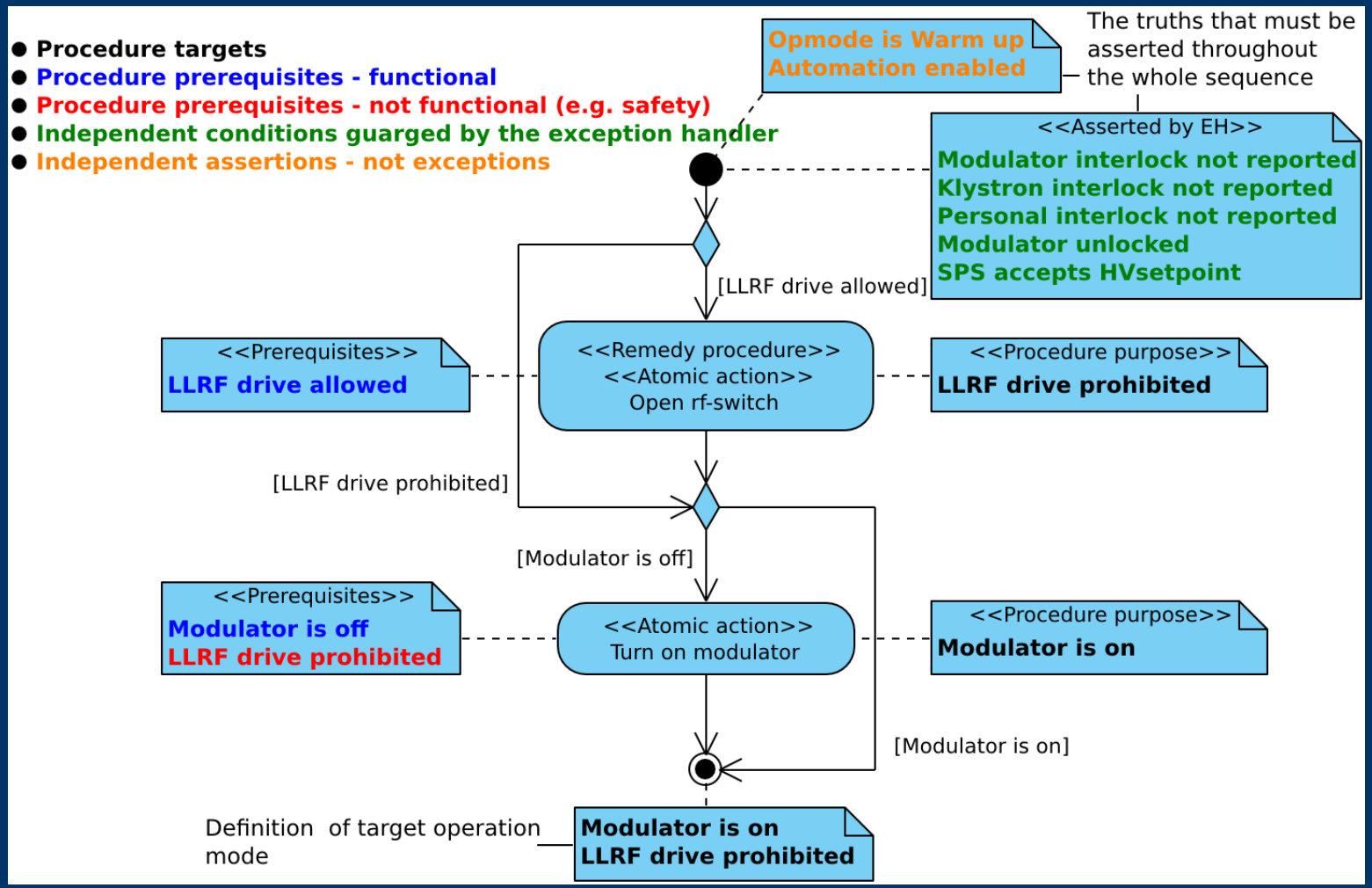

Ready for LLRF

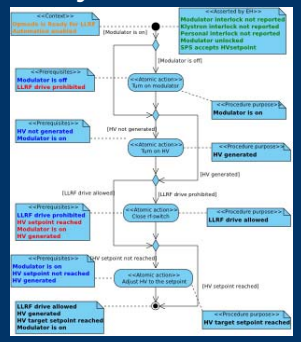

Servicing

Temporal access

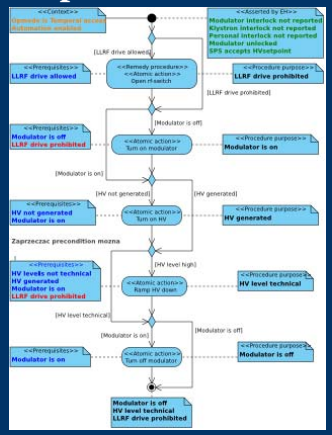

Automation enabled

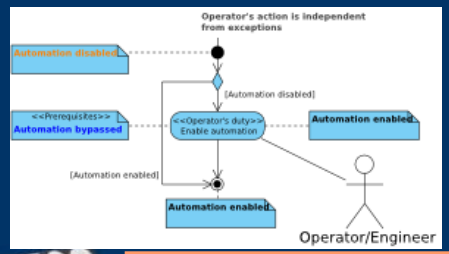

Automation bypassed

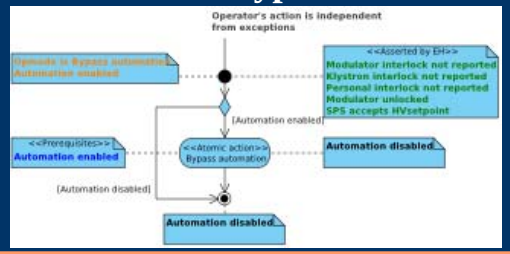

Shutdown

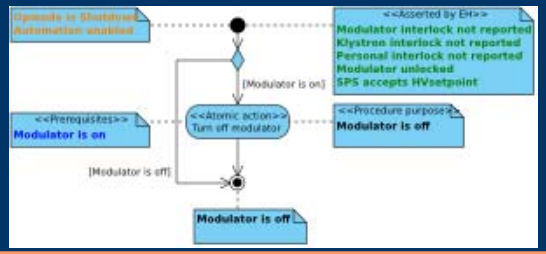

RF-Power Station – EH Specification

System readouts	Data types
HV readout	int
HV setpoint	int
HV sps setpoint	int
Klystron error	bool
Modulator status register 1	bool
IGCT timing applied	bool
Manual mode	bool
HV target setpoint	int
RF-gate status	bool
HV is generated	bool
Modulator is locked	bool
Klys interlocks register 0-23	int
Klys interlocks register 24-47	int
Klys interlocks register 48-71	int
Personal interlock signal	bool
Personal interlock backup	bool
LLRF is inhibited	bool
RF leakage detected	bool
General modulator error	bool

Faults

Personal in terlock reported
RF-leakage reported
Unrecoverable modulator fault
Modulator power supply fuse tripped

Interrupt

Modulator interlock reported
SPS does not accept setpoint
Modulator locked
Klystron interlock reported

Remedy procedures

Restart modulator
Wait 5 min
Reset interlock
Open RF switch

RF Gun operation without probe

Rf control by SimCon 3.1 and sophisticated algorithms

Implications of missing probe:

- calculation of probe form forward and reflected rf
- calibration and linearization is an issue

Algorithms:

- P(I) control with recursive 20 kHz low-pass (IIR) for stability at 'high' gain (>5)
- Adaptive feed forward (AFF) from rf pulse to rf pulse

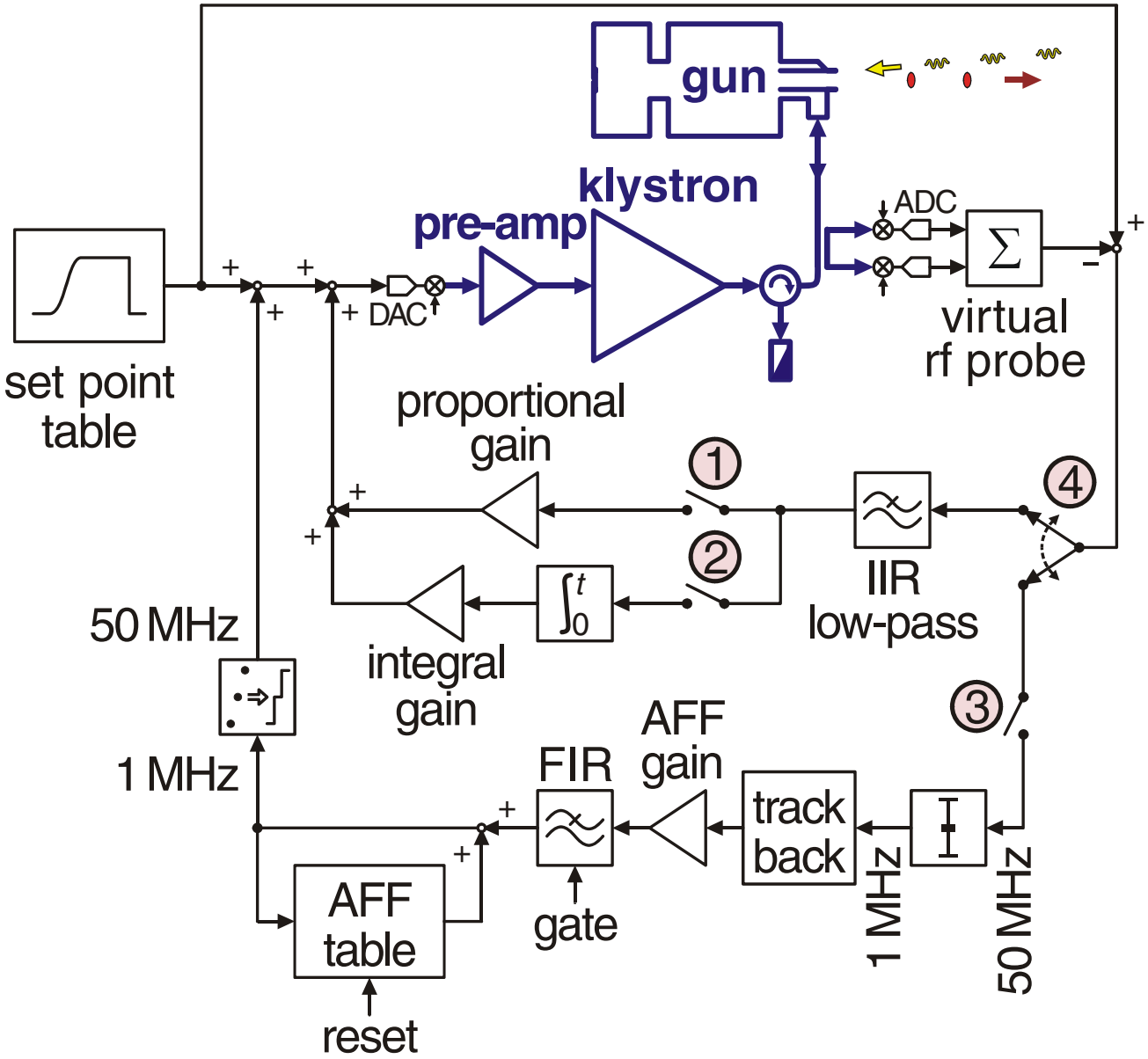

RF-Gun Control with 10MW Klystron

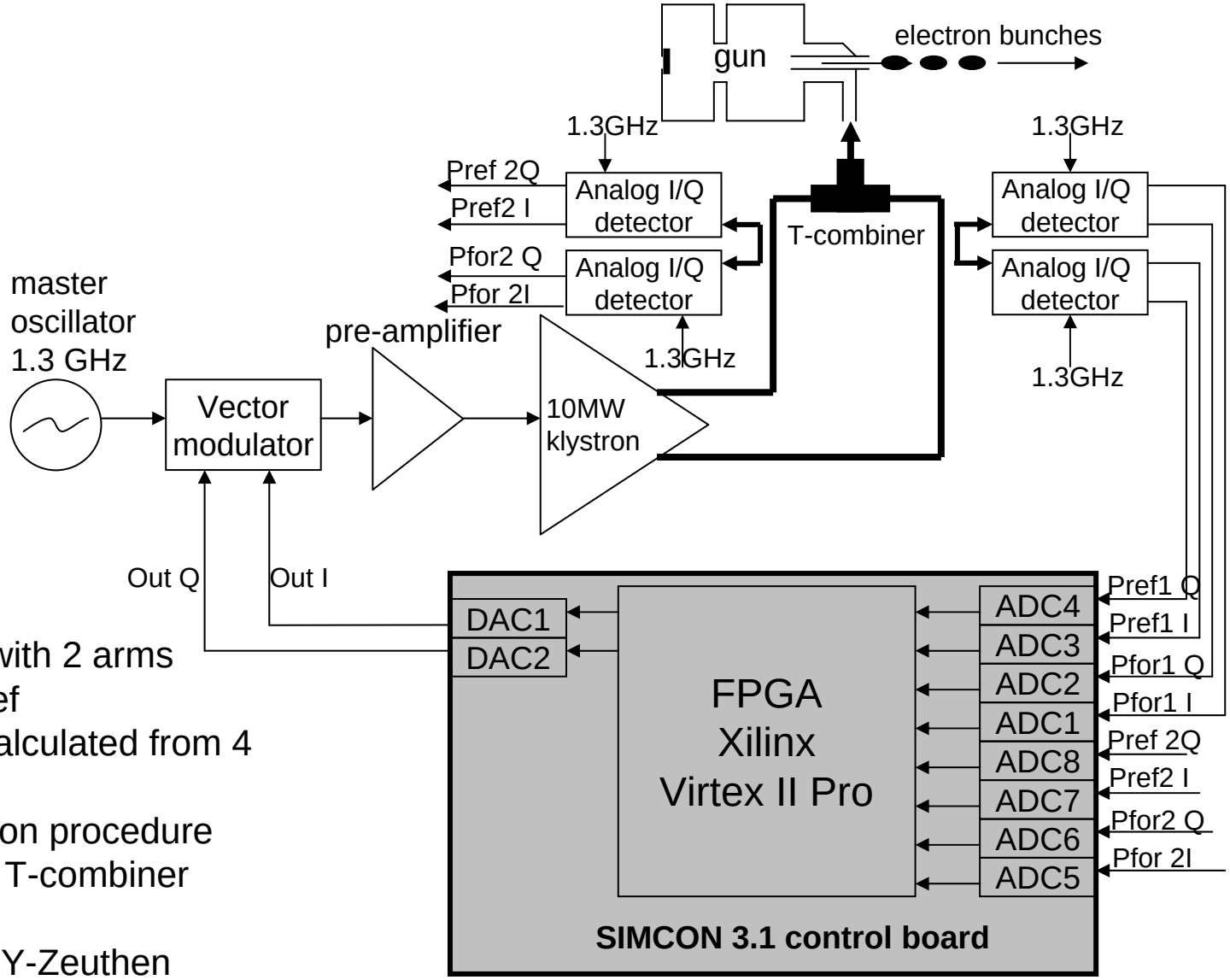

- 10MW Klystron with 2 arms
  - 2xPfor and 2xPref
  - field in the gun calculated from 4 signals
  - complex calibration procedure
  - compensation of T-combiner asymetries
  - teststand at DESY-Zeuthen

Virtual probe signal calibration (method established at FLASH by A. Brandt)

circle fitting after frequency variation

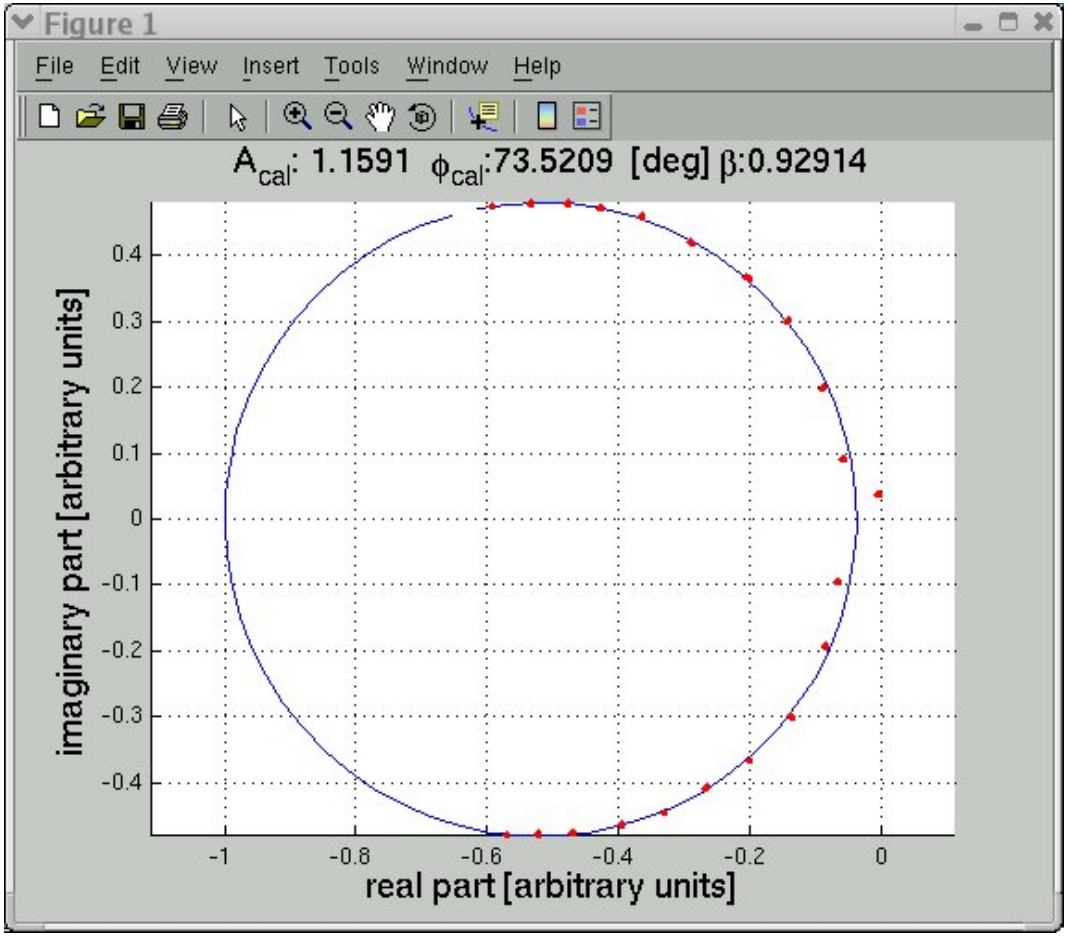

DOOCS panel for calibration parameters

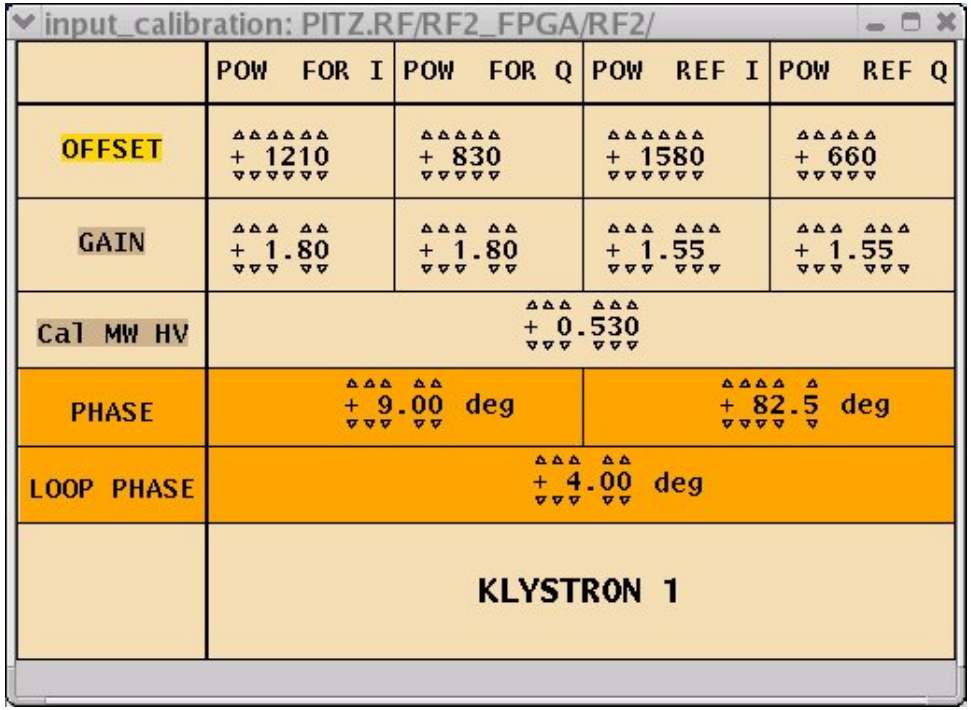

Plots taken at PITZ – the plots and panels look similar at FLASH!

Action of control loops - the case without control

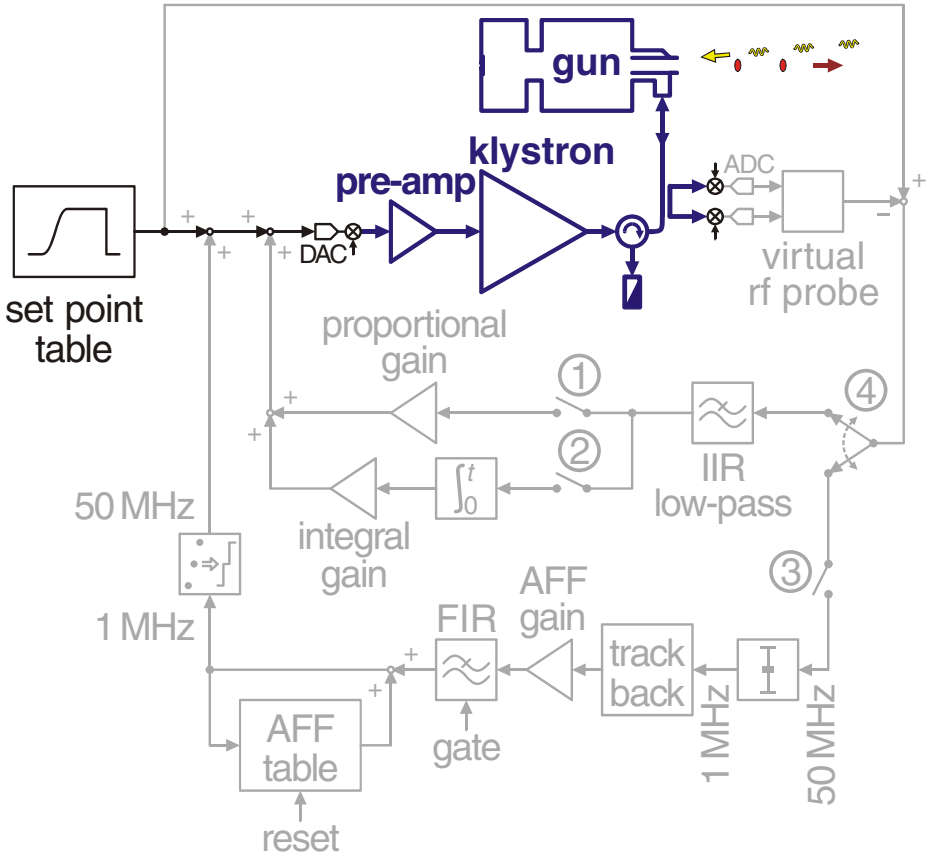

Beam based emission phase measurement:

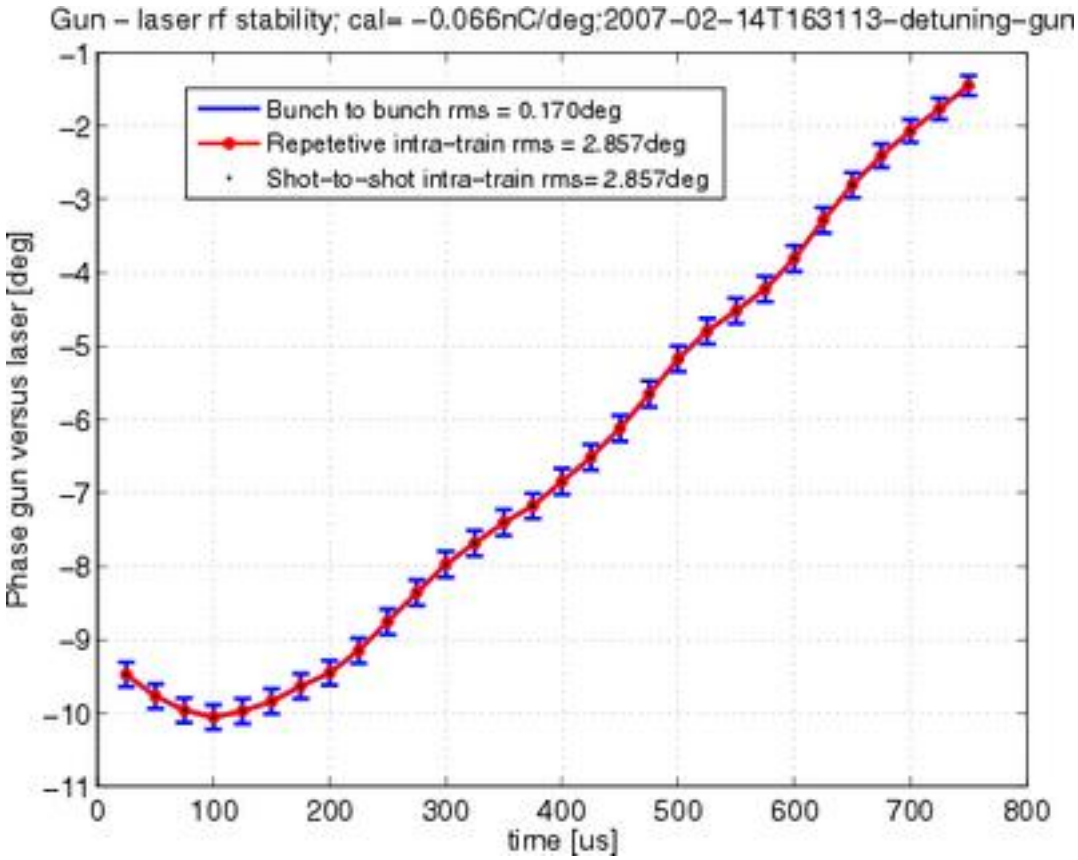

- gun heats up within rf pulse
- gun resonance frequency changes

➢ **the emission phase changes by 8.5°**

The case with P control only

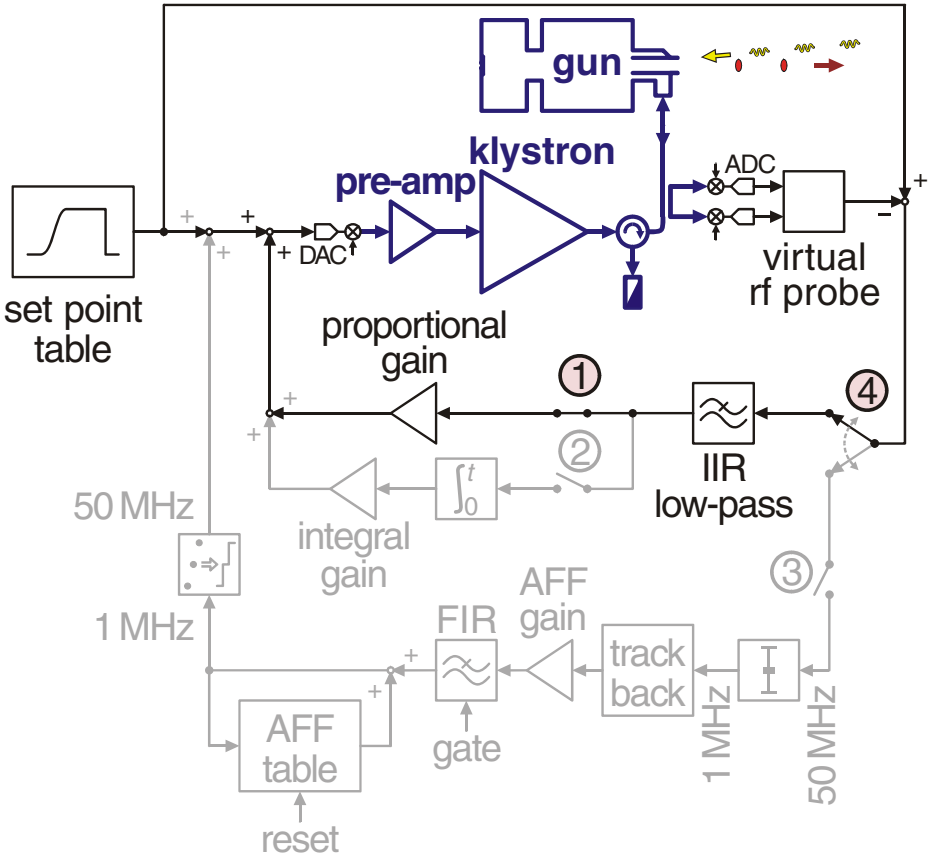

Beam based emission phase measurement:

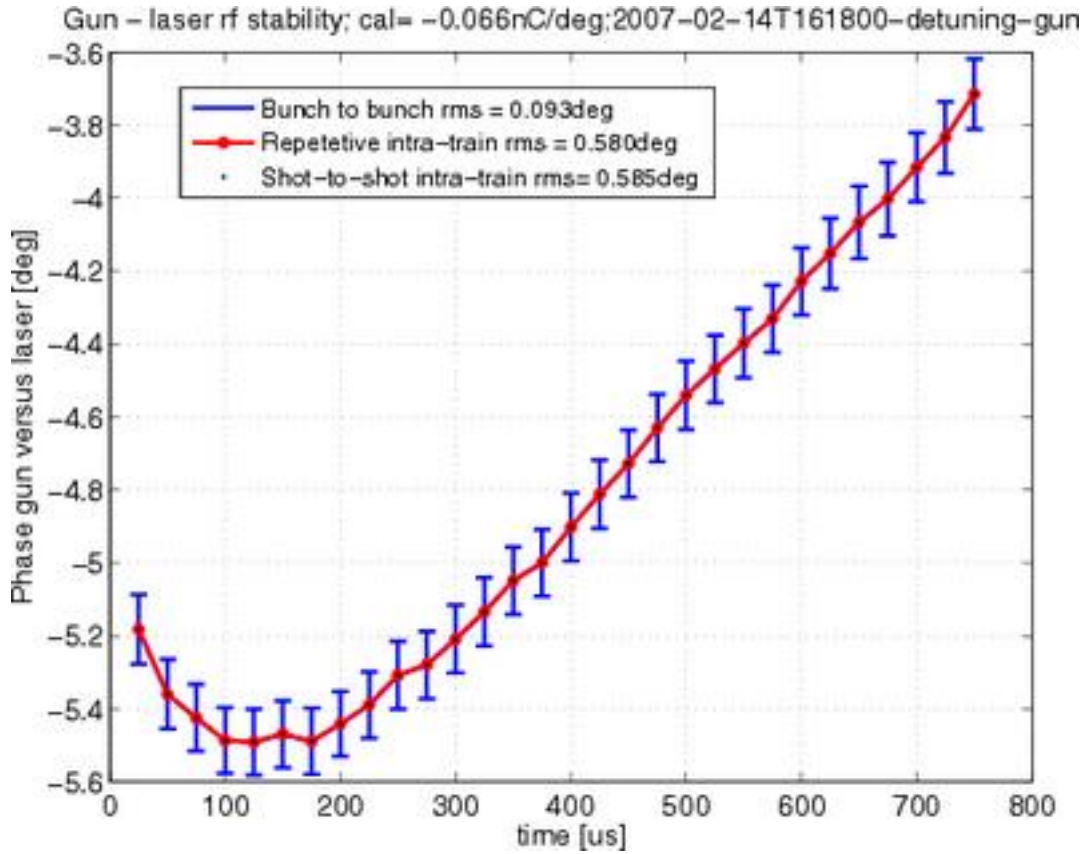

- proportional control with gain 4
- emission phase change suppressed

➢ **the emission phase changes by 1.7°**

Case with P control and adaptive feed forward (AFF)

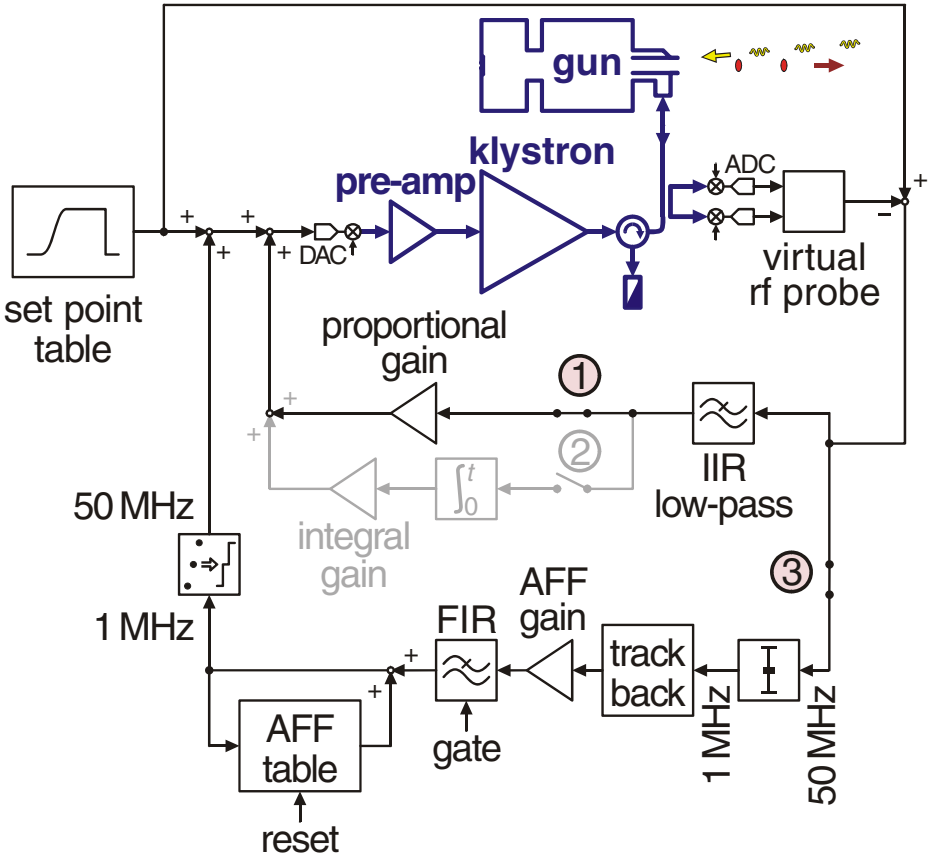

- AFF corrects systematic errors
- AFF gain of 0.4

Beam based emission phase measurement:

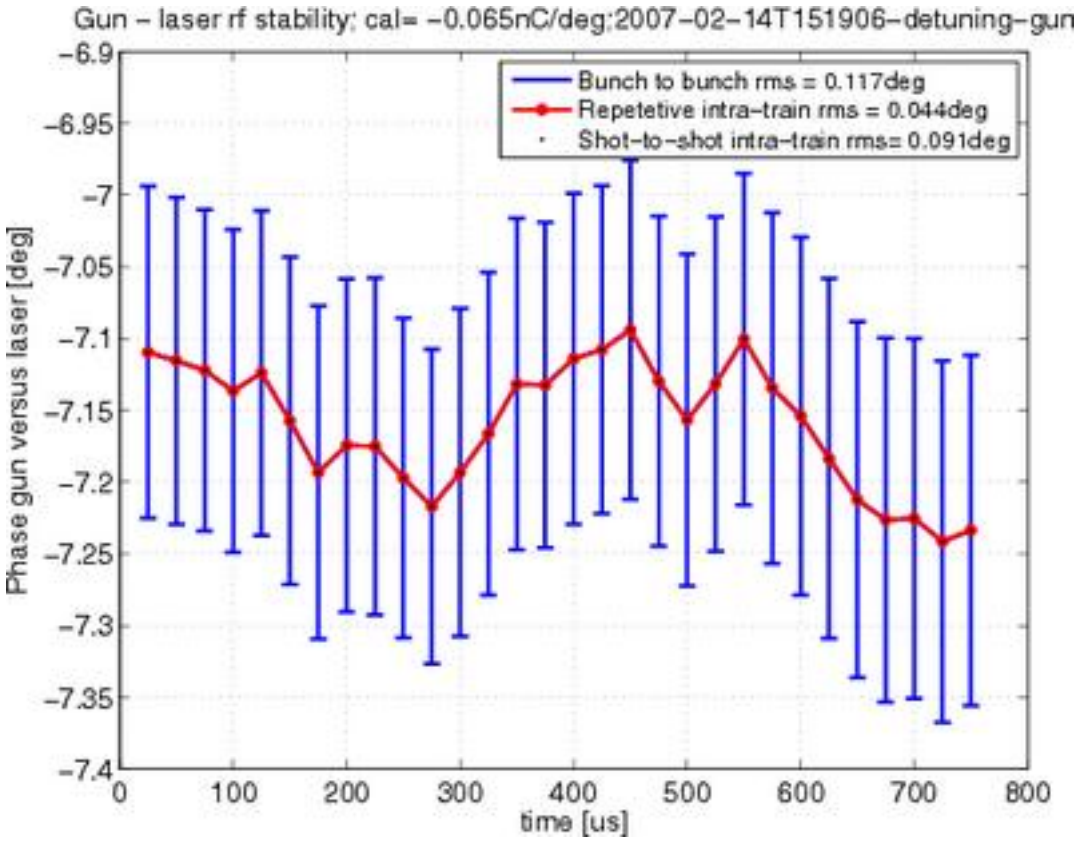

➢ the emission phase changes by 0.14°

Long term stability

(1)

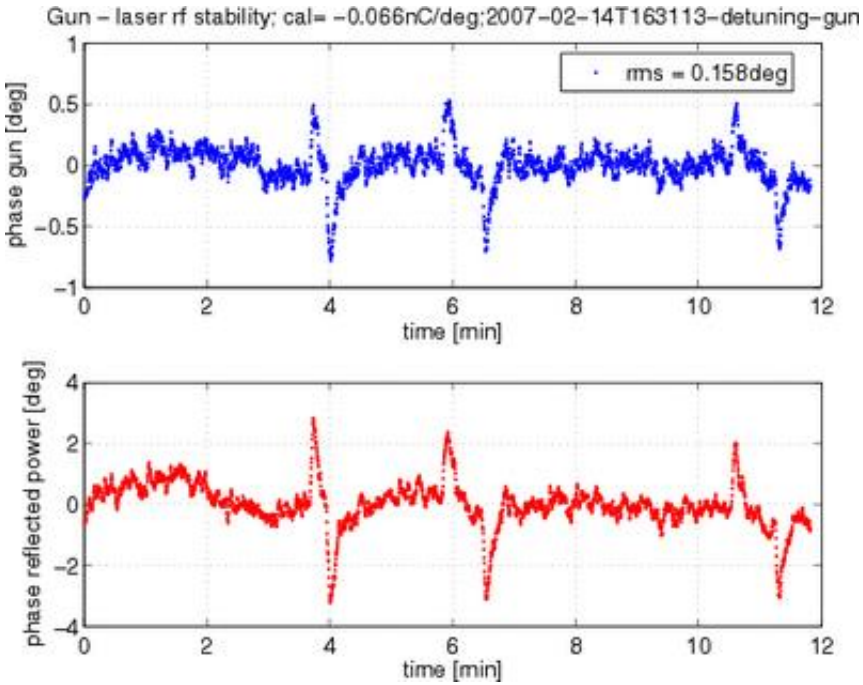

(2)

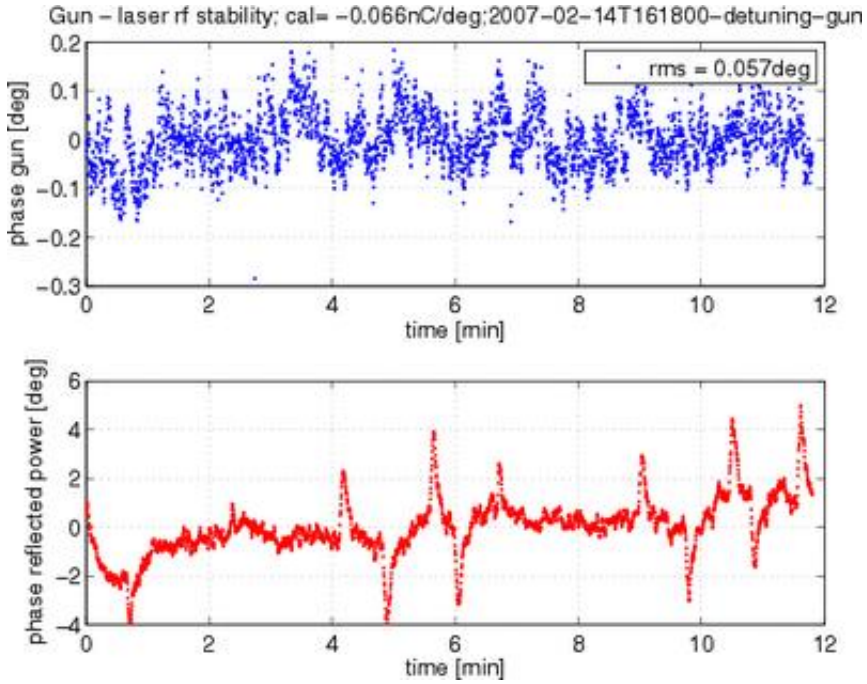

(3)

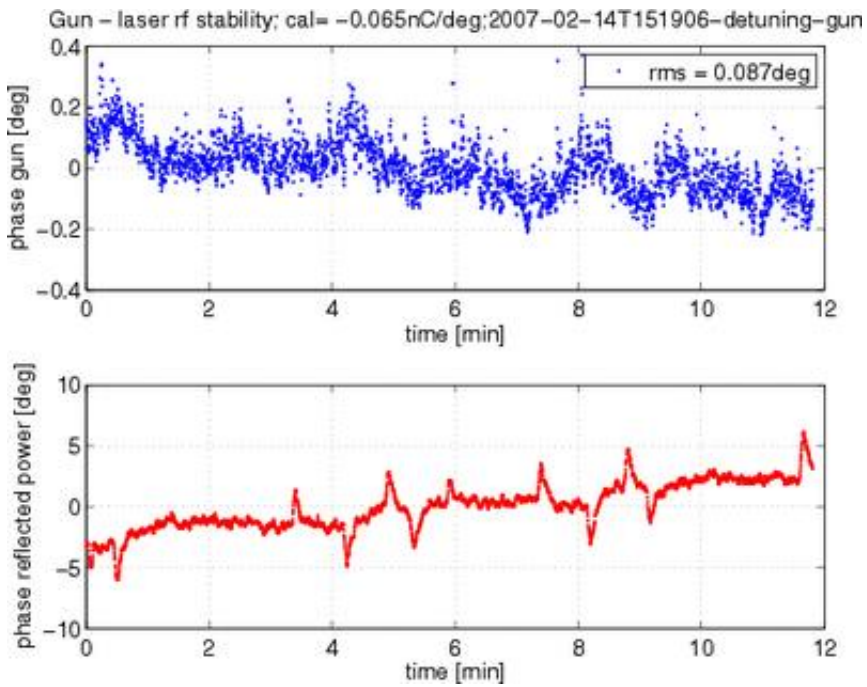

Observed emission phase stability:

(1) RF drive only: peak-to-peak 1.3°

(2) P control only: peak-to-peak 0.4°

(3) P and AFF control: peak-to-peak 0.4°

Beam Loading Compensation

Proportional control with beam based beam loading compensation

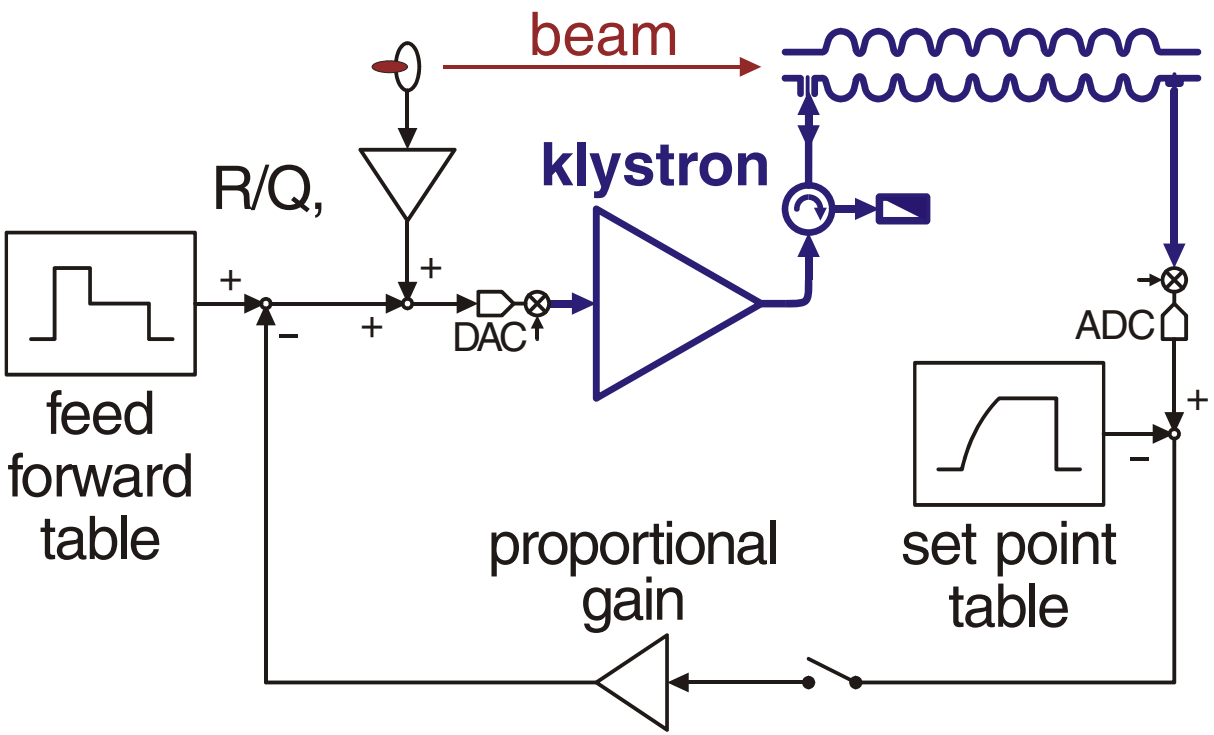

Beam energy measured with synchrotron light spot at BC2

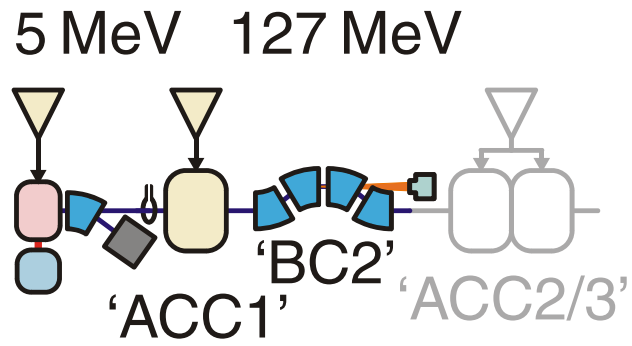

Resolution $\Delta E/E = 10^{-4}$

'Ideal' gain for proportional rf control at ACC1

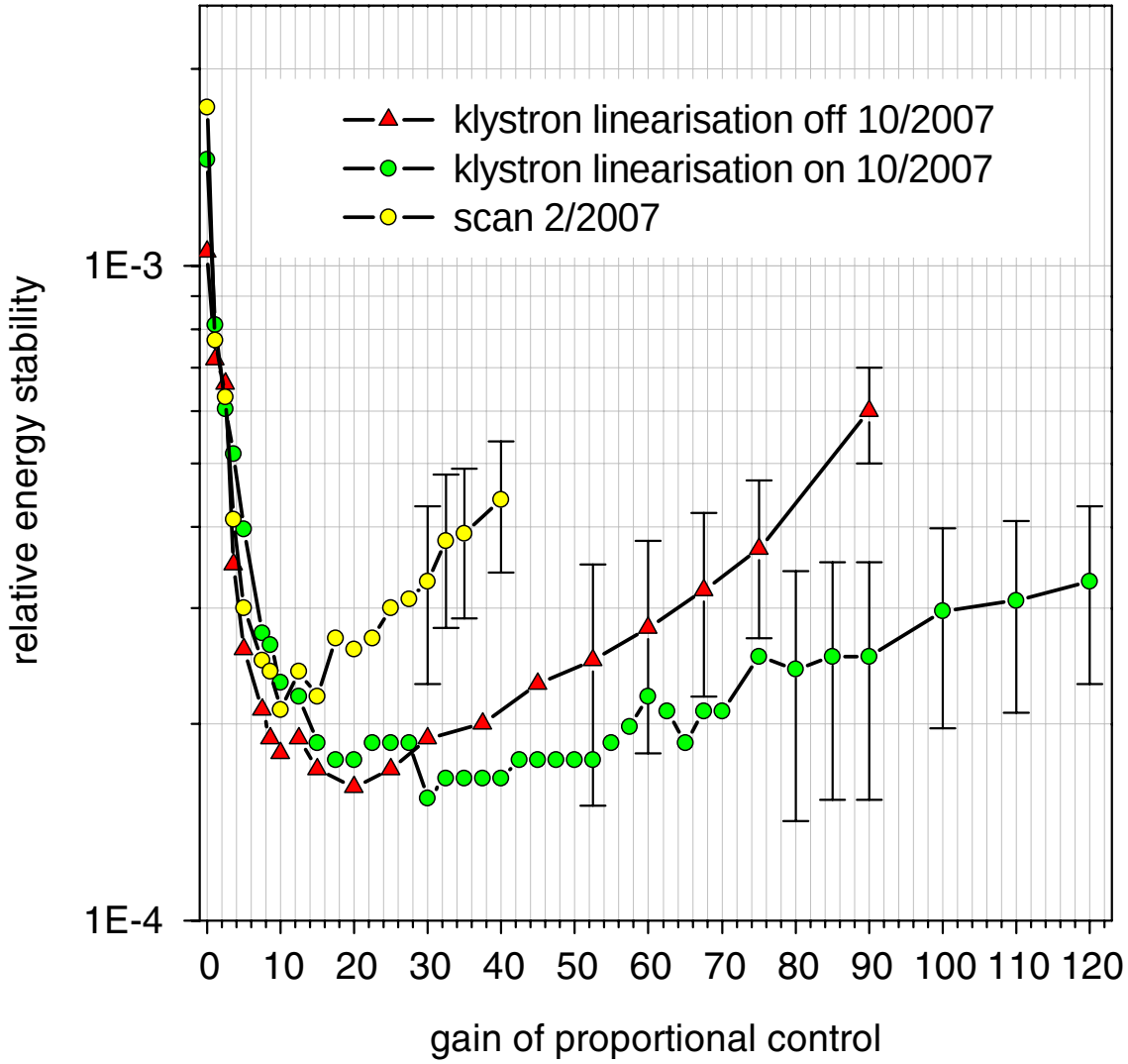

Gain giving most stable beam:

- small gain: error suppression
- large gain: noise amplification
- best single bunch stability: $\Delta E/E = 1.6 \times 10^{-4}$

Gain limitations:

- noise at pick up signal?
- w/o paying attention to the 8/9 π mode: $G = 40$
- paying attention to the 8/9 π mode: $G > 100$

Actual status of the ACC1 beam loading compensation

Status:

- not yet ideal, but…
- sufficient for SASE with more than 400 bunches

Next steps:

- improvement of calibration
- further qualification by beam measurements

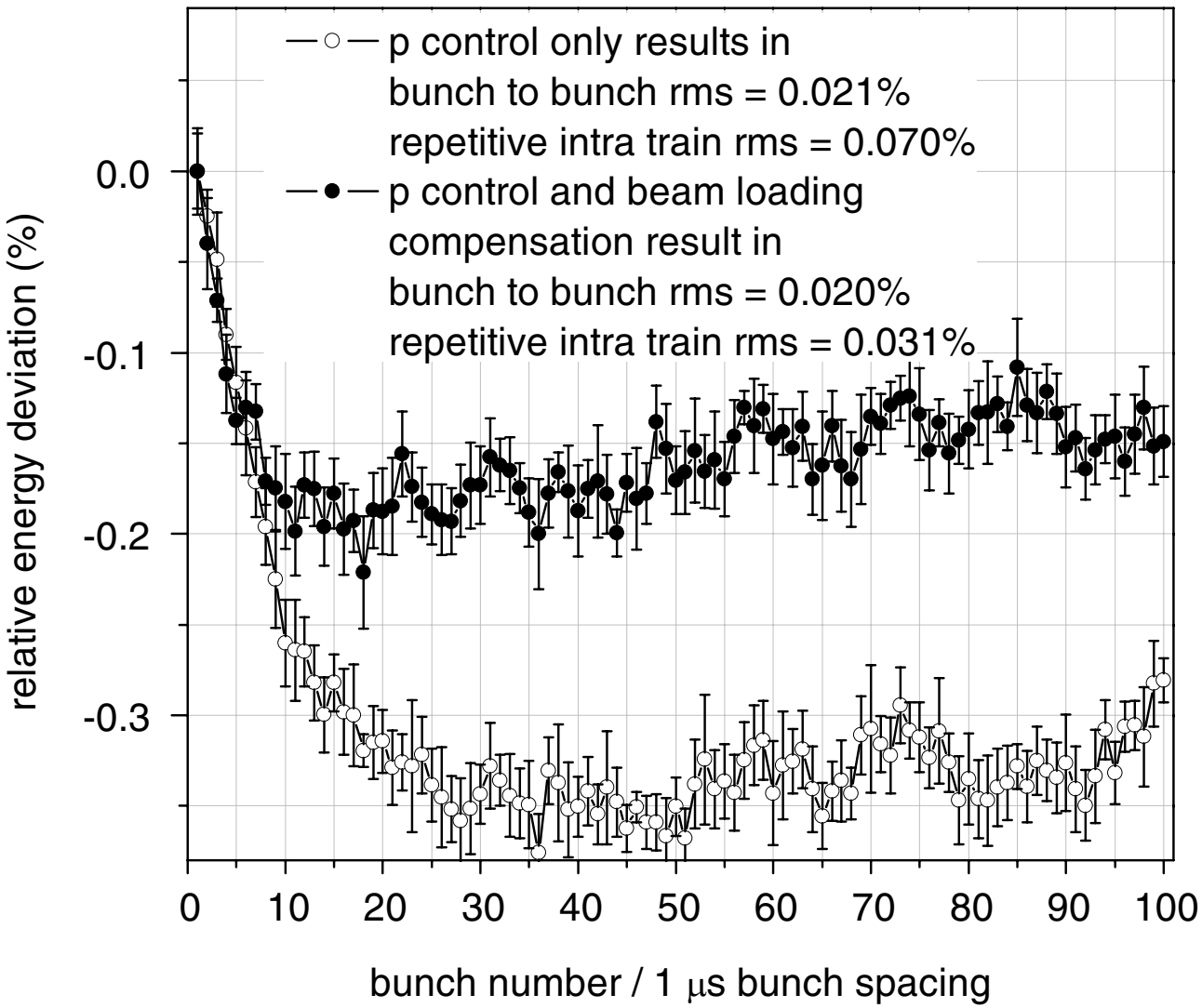

Klystron Linearization

FLASH RF stations

High power amplifiers diagnostic

- On-line amplifiers diagnostics

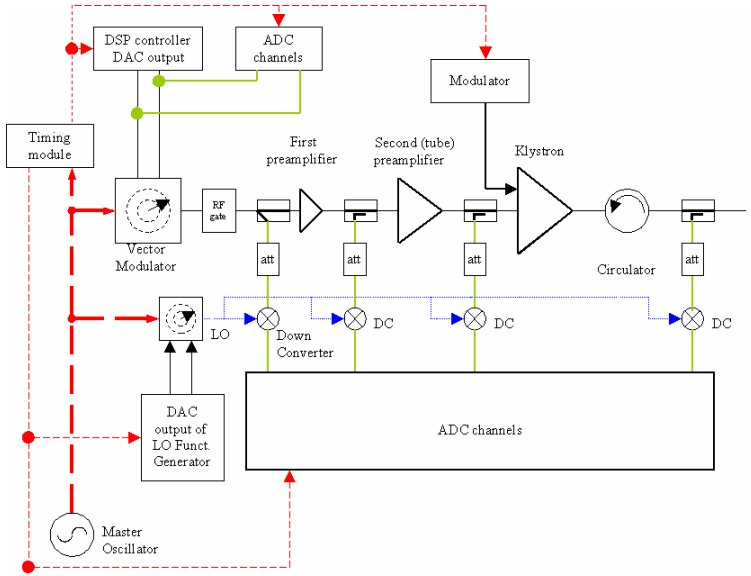

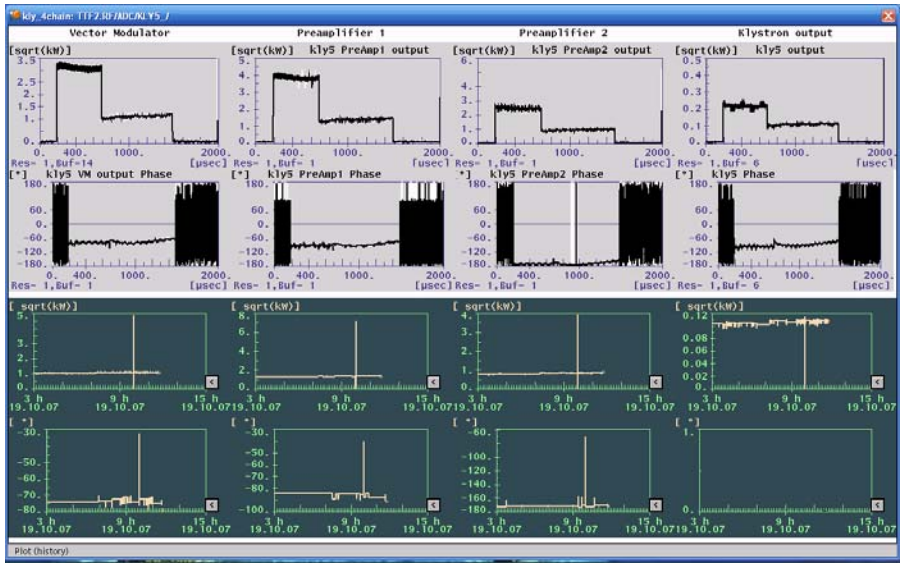

- Transfer characteristic measurements

Klystron 2 – characteristics

(and current OP)

- The amplitude (left) and phase (right) transfer characteristic for the klystron operation with HV level 122kV.
- Blue curve – nonlinear amplitude transfer characteristic
- Red curve – transfer characteristic after linearization

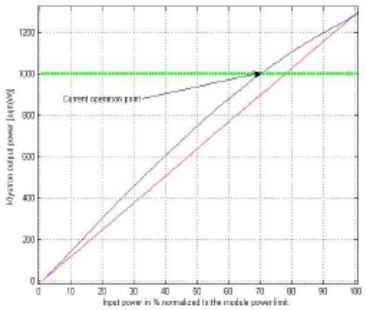

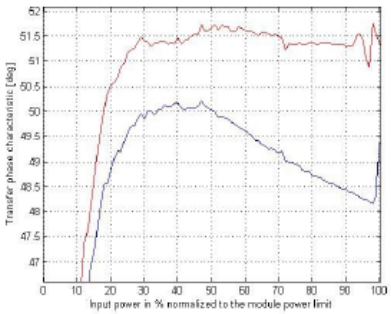

Klystron 5 – characteristics

(up to the OP)

- The amplitude to amplitude (left side) and phase to amplitude (right side) characteristics for klystron 5 (HV=121kV, Simcon 3.1 operation).

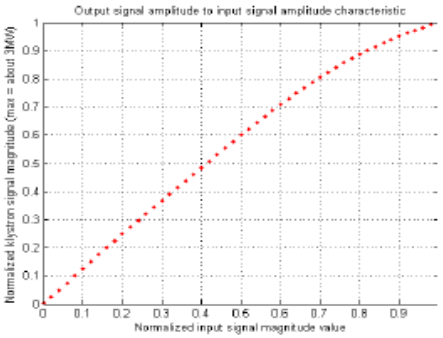

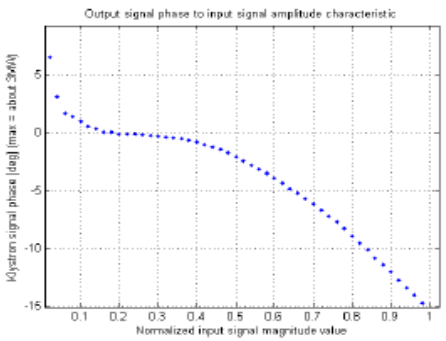

FLASH RF stations
High power amplifiers chain linearisation

- Linearisation of the HPC of RF Stations
- DOOCS integrated operator GUI for linearisation tool management

Main tool window

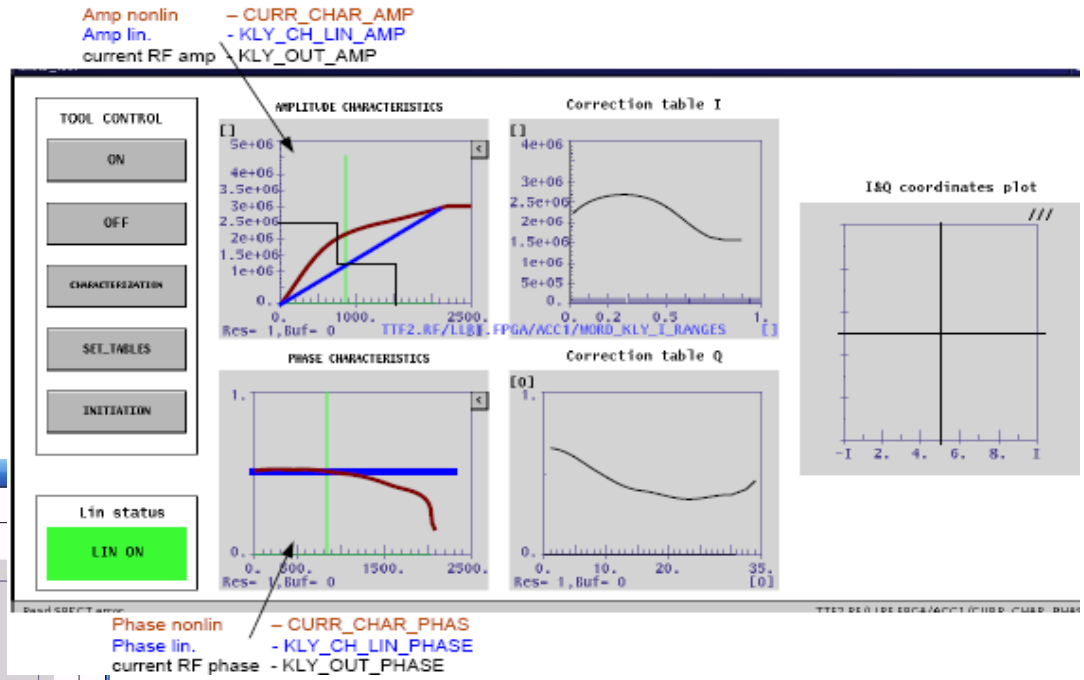

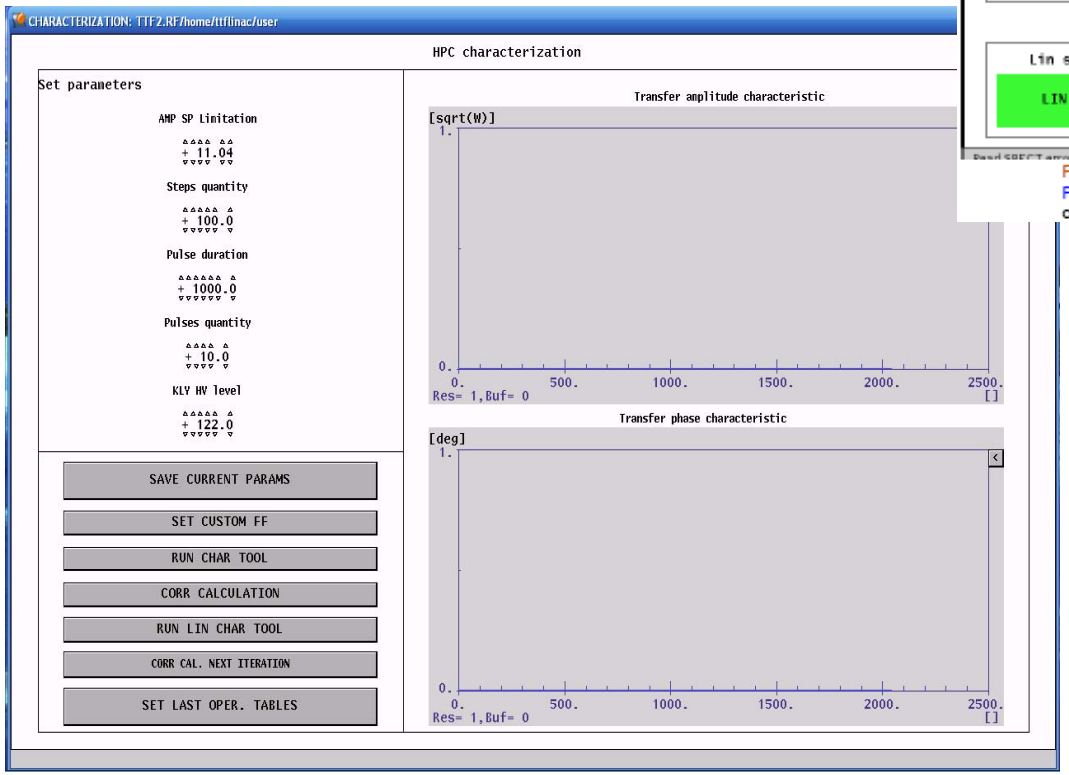

- Customize characteristics measurements tool,
- Correction coefficients calculations,
- Characterization for different HV levels.

Klystron Saturation (10MW,Toshiba)

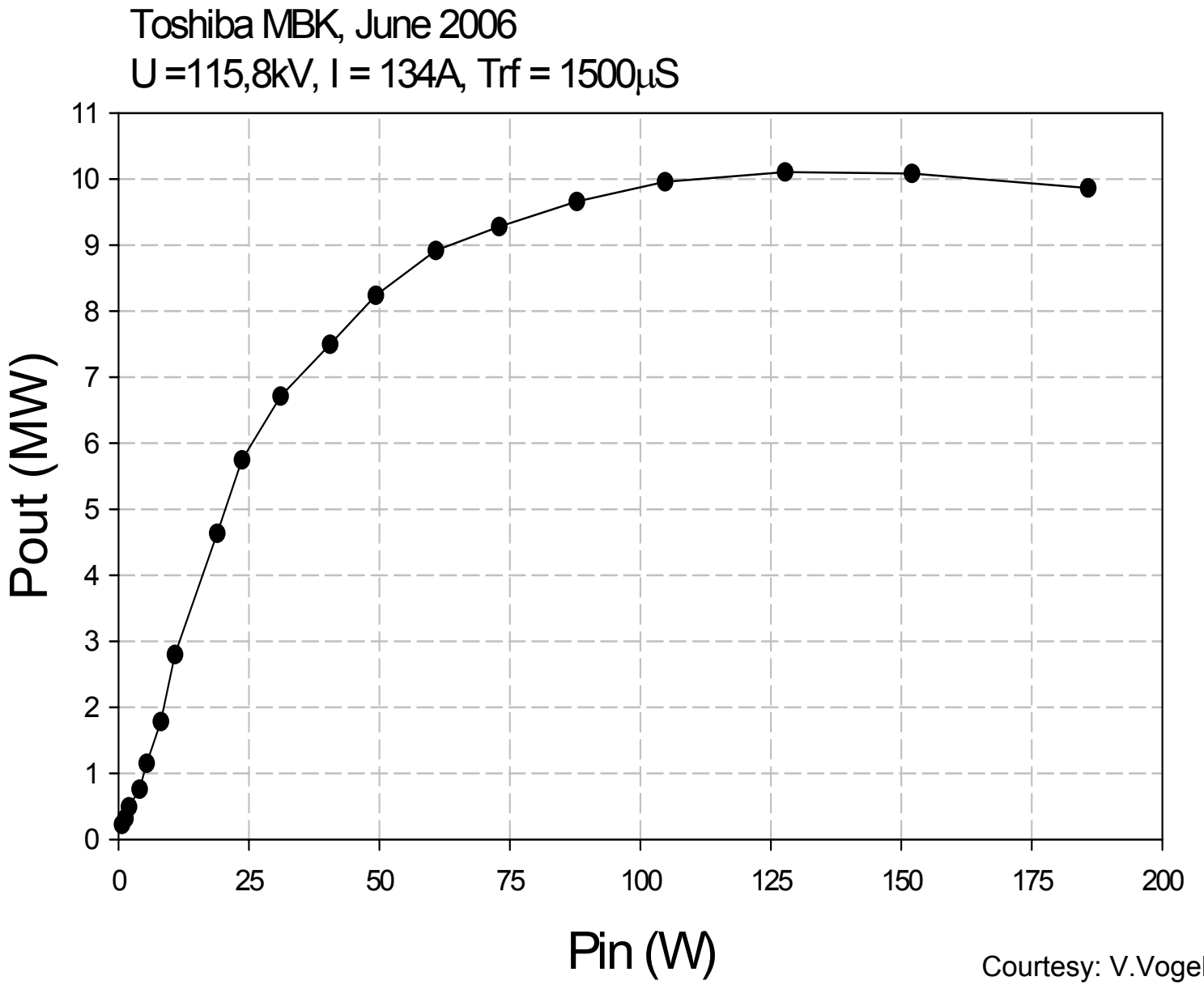

Courtesy: V.Vogel,DESY

The current operating point for FLASH klystrons

- Klystron 4 – 10 MW tube:
  - supplies ACC 4 & 5 & 6: 8 cav. in each module
  - operating HV: 110 kV
  - LLRF controller: DSP system
  - current operating point (data from 11.09.07):
    - Klystron output: about 5.3 MW (max. 5.4 MW)
      (max. Acc4C1=170kW, Acc5C2=150kW, Acc6C1=350kW)

Summary - FLASH status

- Current FLASH RF stations operating points are far from the operational limits:
  - K2 ~ 20% of 5MW, - K3 ~ 62% of 5 MW,
  - K4 ~ 53% of 10MW, - K5 ~ 60% of 5 MW.
- Current OP already are placed in the region where transfer characteristics of High Power Chain are non-linear
- The output power margin is well balanced concerning the LLRF field controller range and HV level. For current OP levels the LLRF controller has sufficient output signal range to provide (non-saturated) operation of the modules even for the feedback gain that corresponds to operation near to the loop instability.

Dosimetry

Radiation monitoring real-time system

The aim of the system:

Real-time dosimetry of gamma radiation and neutron fluence in a few different spots of XFEL

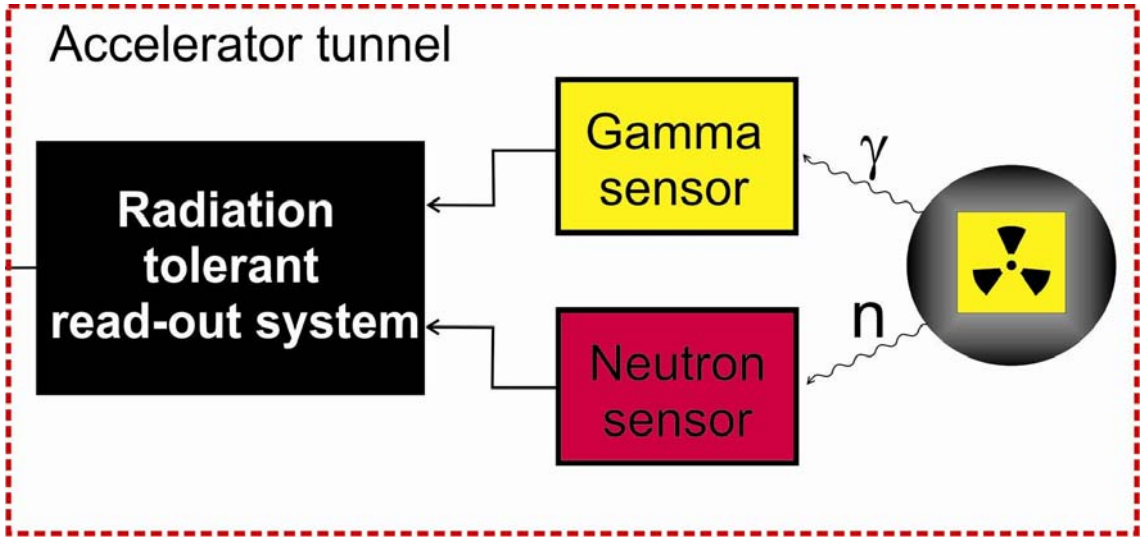

Detectors:

Neutron radiation – modified **SRAM-based dosimeter 2 MB**

Gamma radiation – **RadFET 1000 nm**

Distributed n/γ radiation monitoring system

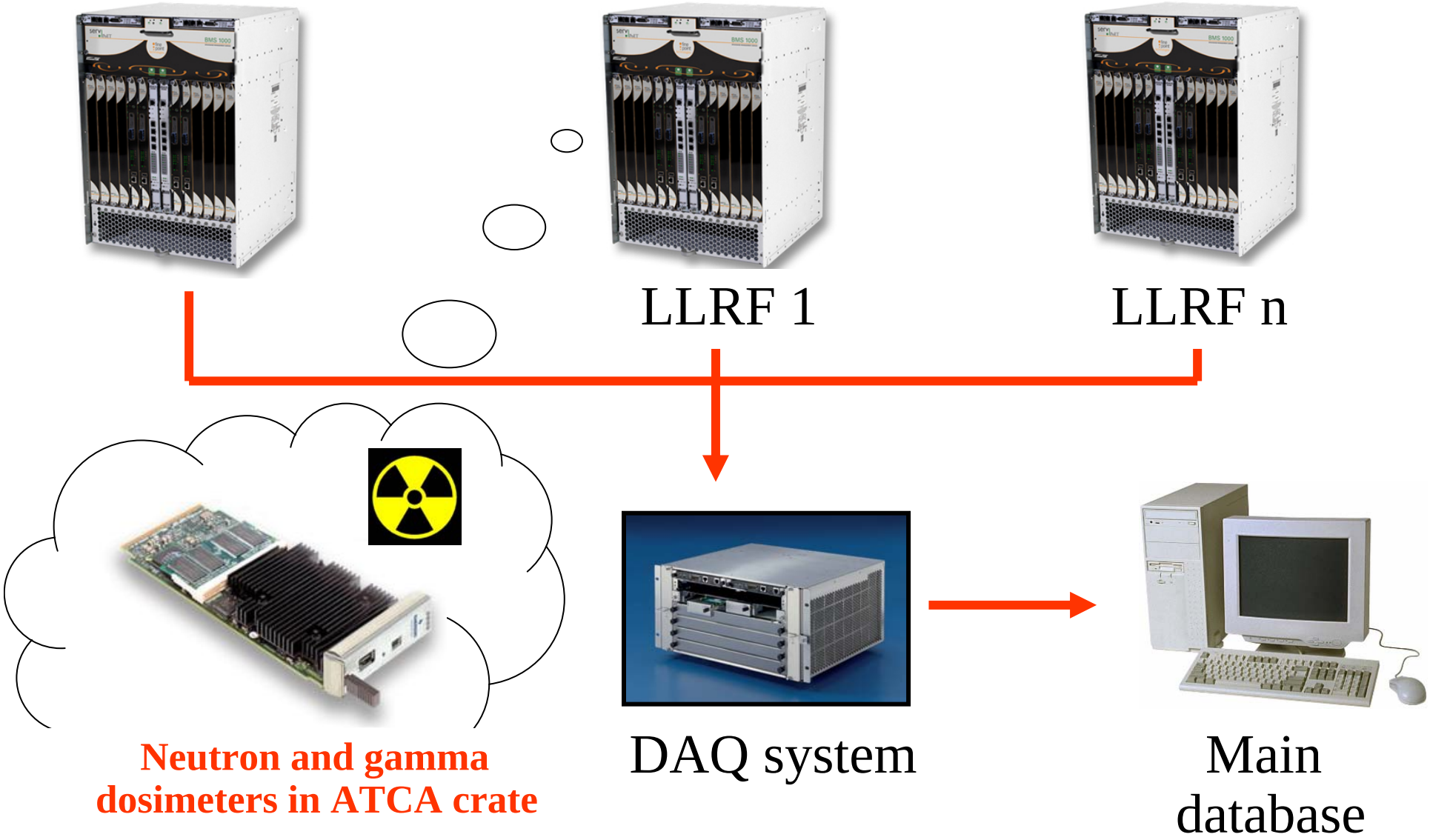

In-situ Radiation Dosimetry at FLASH Module

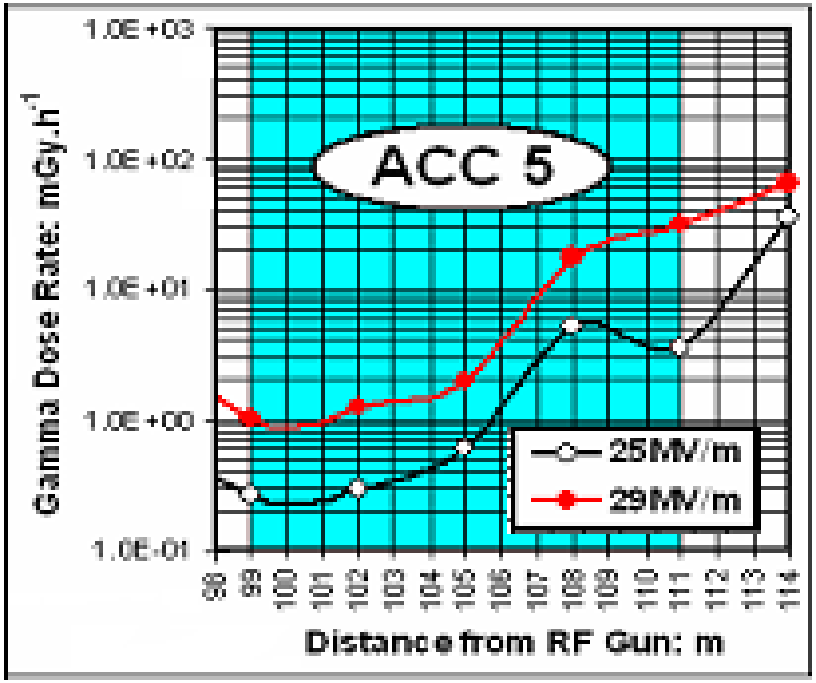

Gamma Dose Rate along the module tank

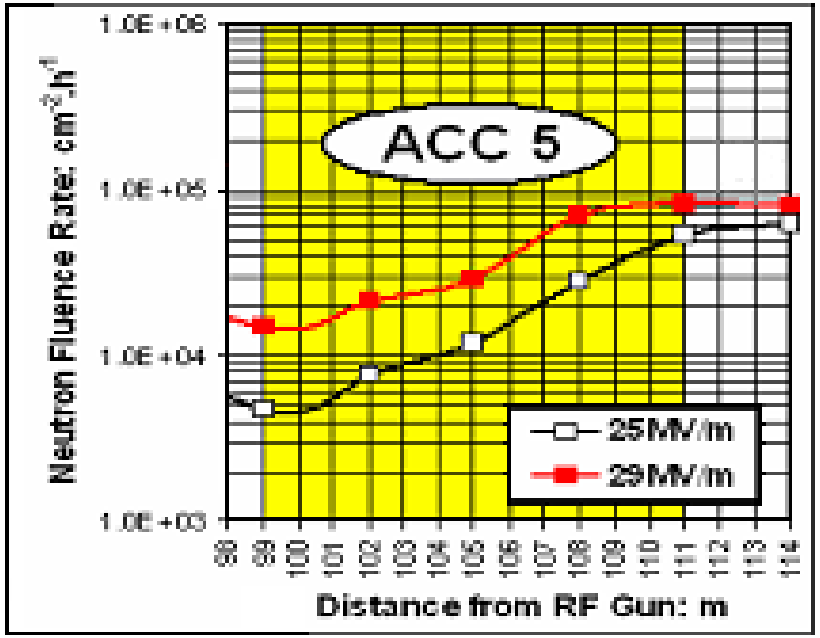

Neutron Fluence Rate along the module tank

Gamma Dose Measurement along FLASH during Routine Operation at a gradient of ~21 MV/m

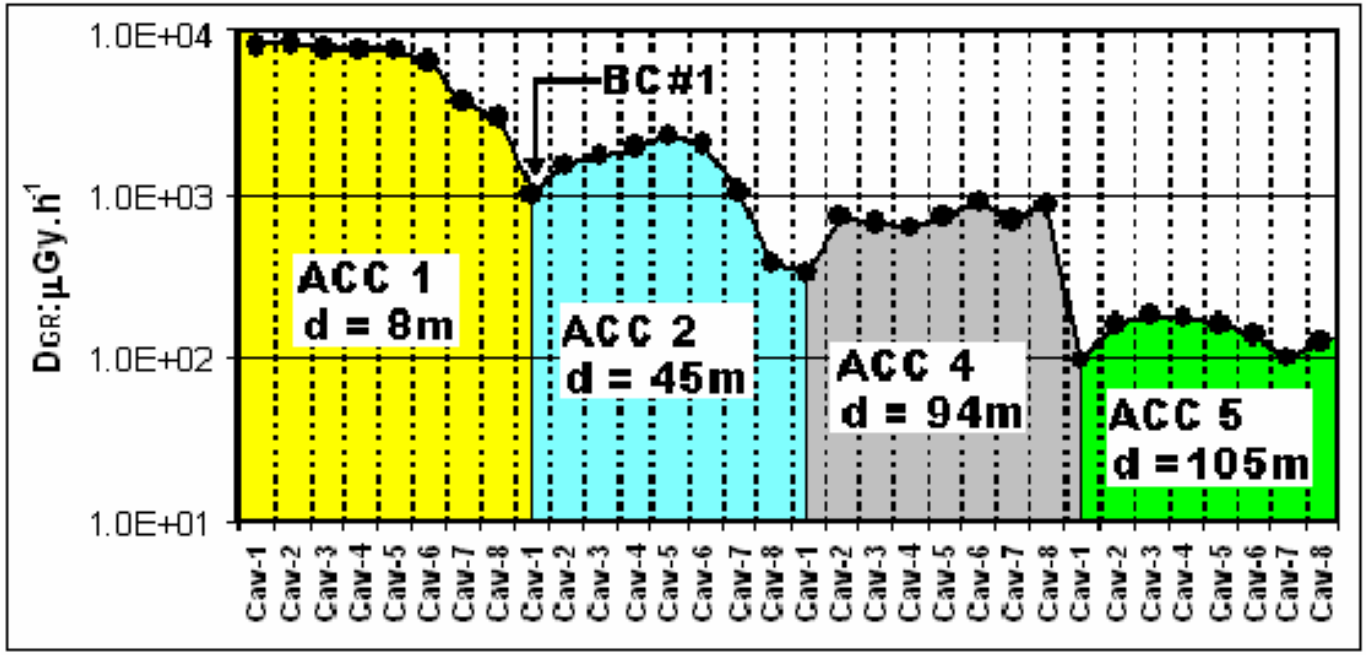

- Accelerated dark current from RF gun is the prime source of gamma dose
- Gamma dose rate drops with the distance from the RF gun
- Gamma dose rate at the cryomodule (ACC 1) near bunch compressor (BC #1) is two orders of magnitude higher than the distant module ACC 5
- The dose distribution pattern along the module surface is non-homogeneous
- The radiation dose at modules far away for the RF gun caused by the accelerated field emission electrons

In situ Dosimetry of Neutron and Gamma Radiation Fields in FLASH Environment

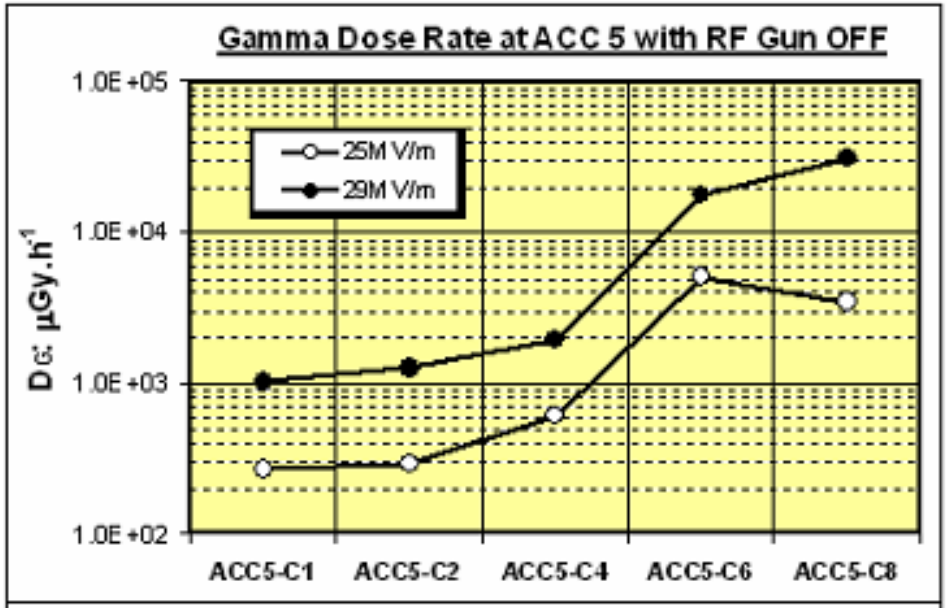

Gamma dose rates along ACC 5 running in field emission mode (RF gun off)

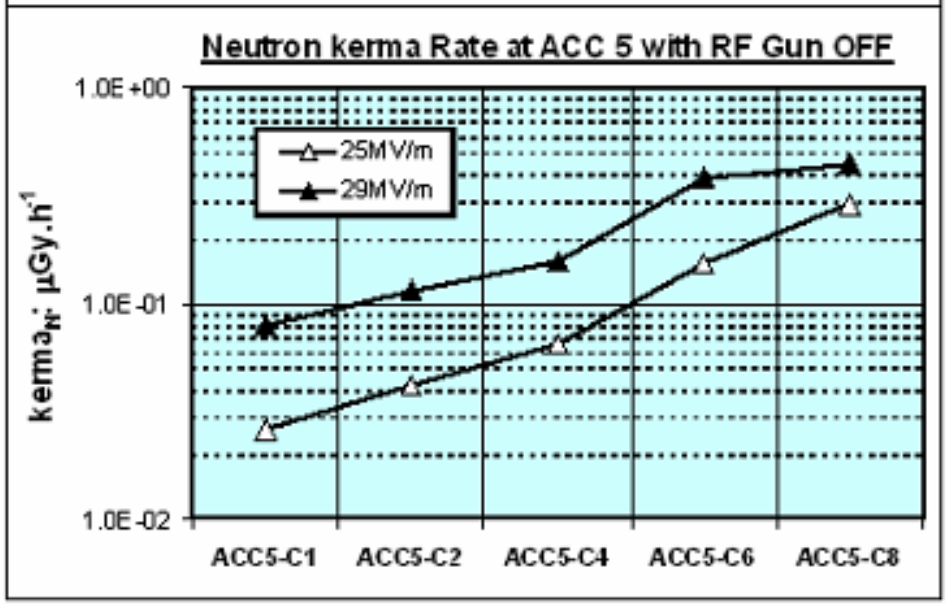

Neutron dose (kerma) rate along ACC 5 running in Field-Emission mode

Gamma Dose rate is 4 orders of magnitude higher than neutron kerma (Si) rate.

SEU Immunity

SEU tolerant IQ detection algorithm

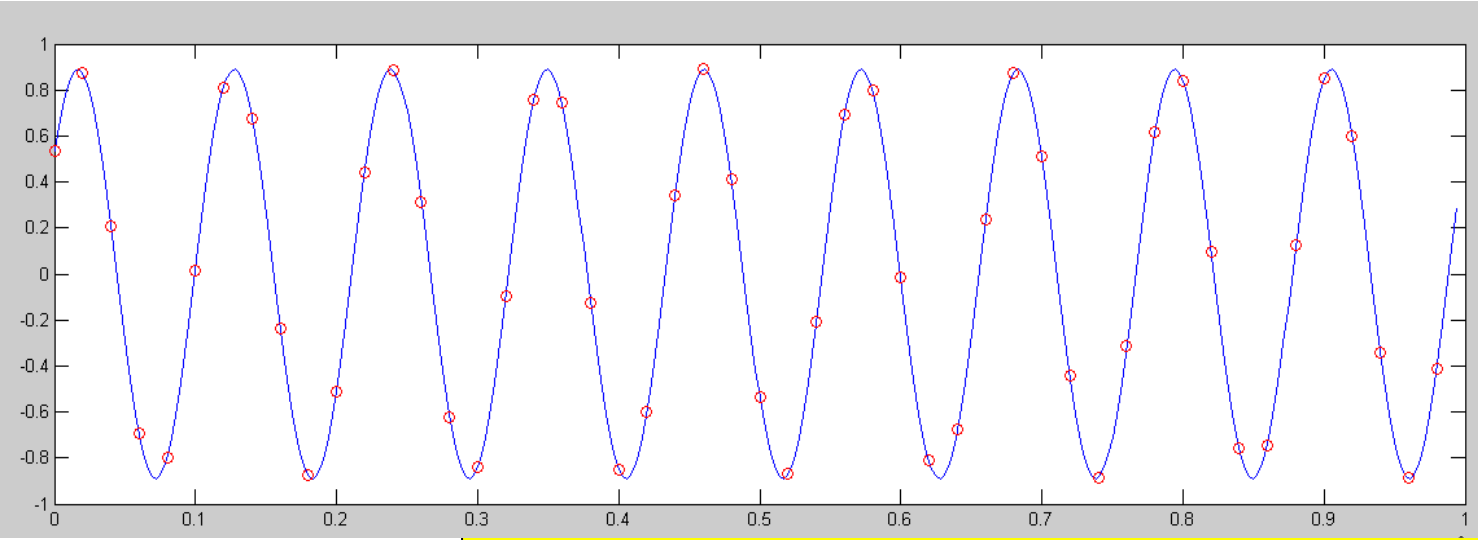

N – number of samples

x_i – signal sample

$\alpha_i = i \cdot \alpha$

α – phase advance

$$\begin{bmatrix} I \\ Q \end{bmatrix} = \frac{2}{N} \begin{bmatrix} \sin\alpha_1 & \sin\alpha_2 & \dots & \sin\alpha_N \\ \cos\alpha_1 & \cos\alpha_2 & \dots & \cos\alpha_N \end{bmatrix} \cdot \begin{bmatrix} x_1 \\ x_2 \\ \dots \\ x_N \end{bmatrix} = \mathbf{A} \cdot \mathbf{X}$$

Redundancy

$$\begin{bmatrix} I \\ Q \\ S_1 \\ S_2 \end{bmatrix} = \frac{2}{N} \begin{bmatrix} \sin\alpha_1 & \sin\alpha_2 & \dots & \sin\alpha_N \\ \cos\alpha_1 & \cos\alpha_2 & \dots & \cos\alpha_N \\ pcs_1 & pcs_2 & \dots & pcs_N \\ qcs_1 & qcs_2 & \dots & qcs_N \end{bmatrix} \cdot \begin{bmatrix} x_1 \\ x_2 \\ \dots \\ x_N \end{bmatrix} = \begin{bmatrix} \mathbf{A} \\ \mathbf{PCS} \\ \mathbf{QCS} \end{bmatrix} \cdot \mathbf{X}$$

IQ detection algorithm - simulation

- Randomly generated SEUs were affecting all registers
- Almost all errors were corrected (except errors in output registers – application of error correcting codes is required)
- Only double hardware redundancy

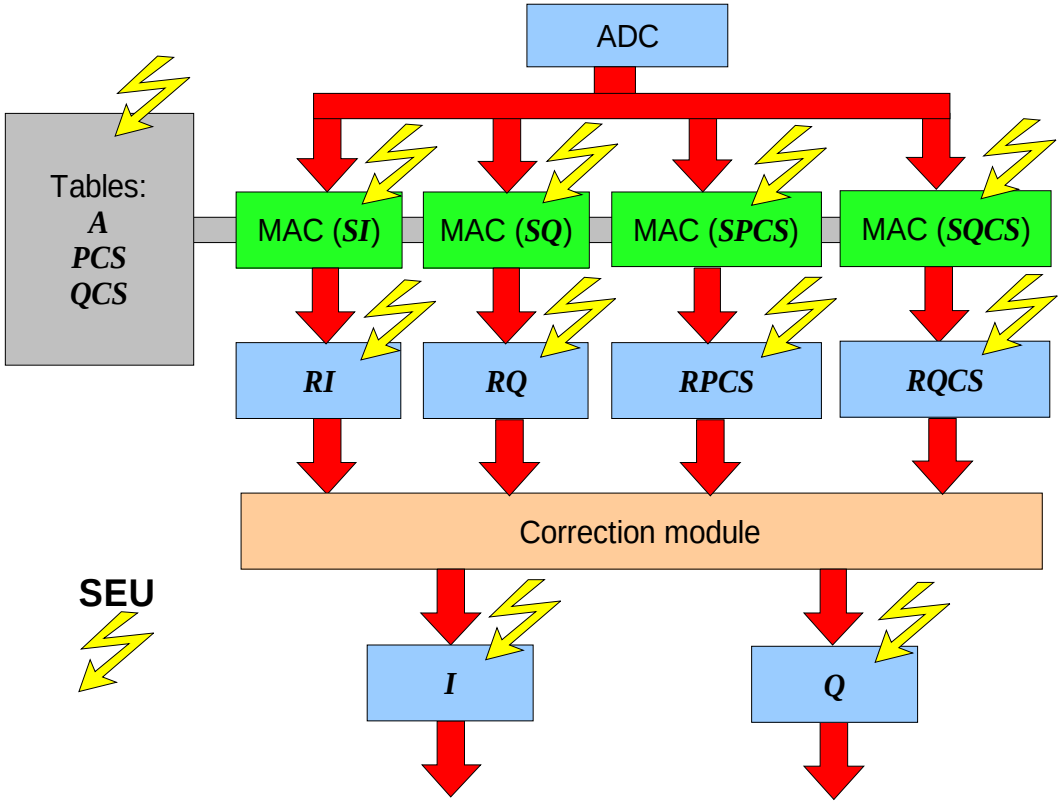

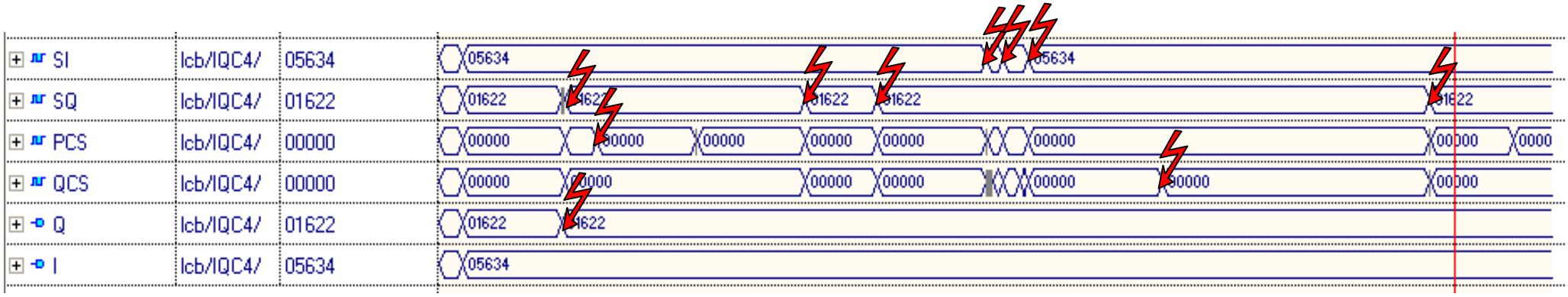

Automatic generation of redundancy

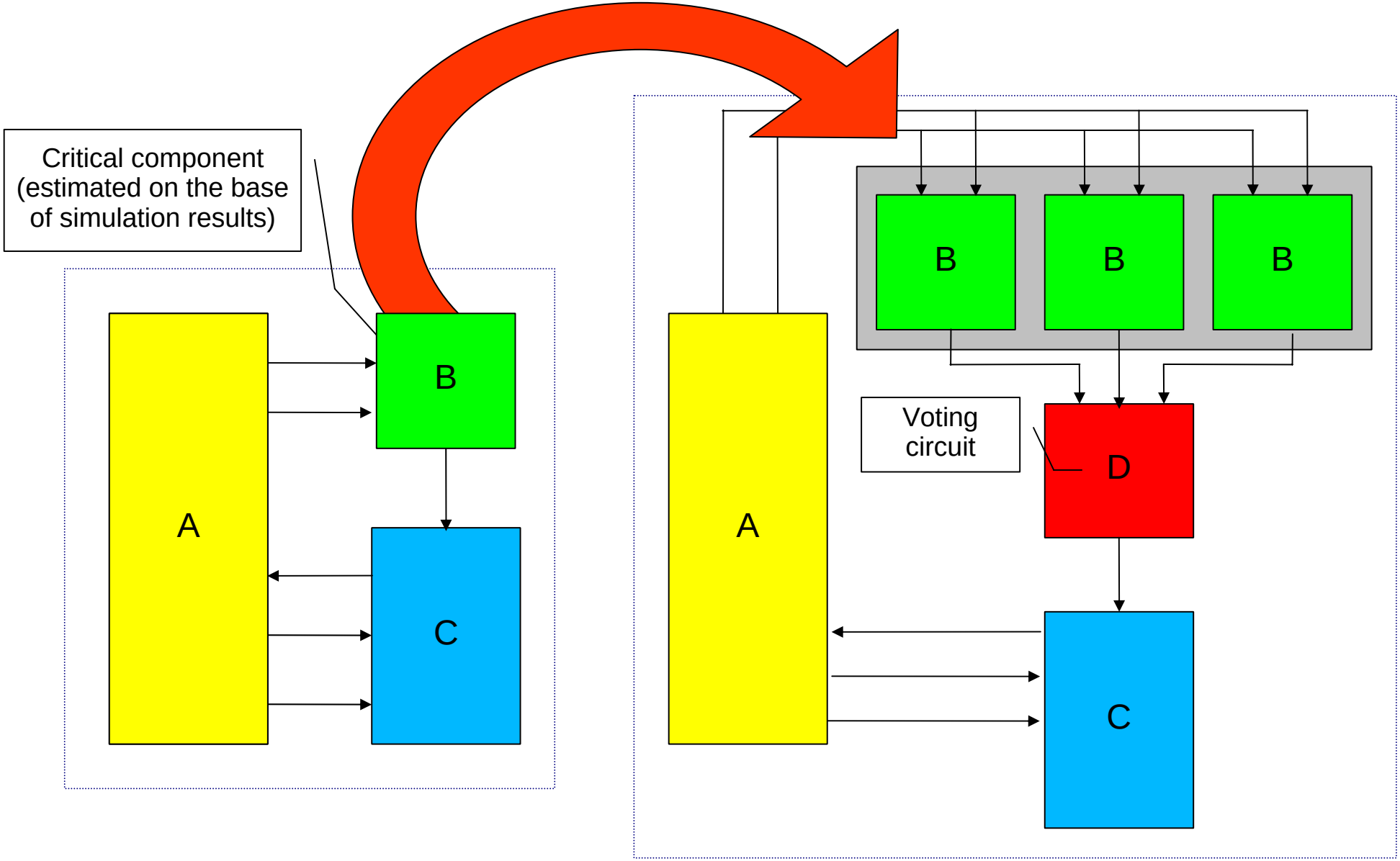

LLRF Planning for the XFEL

Overall XFEL Schedule

- We have the overall schedule promising first beam through the linac before end of 2013; this schedule can be used to determine earlier project milestones

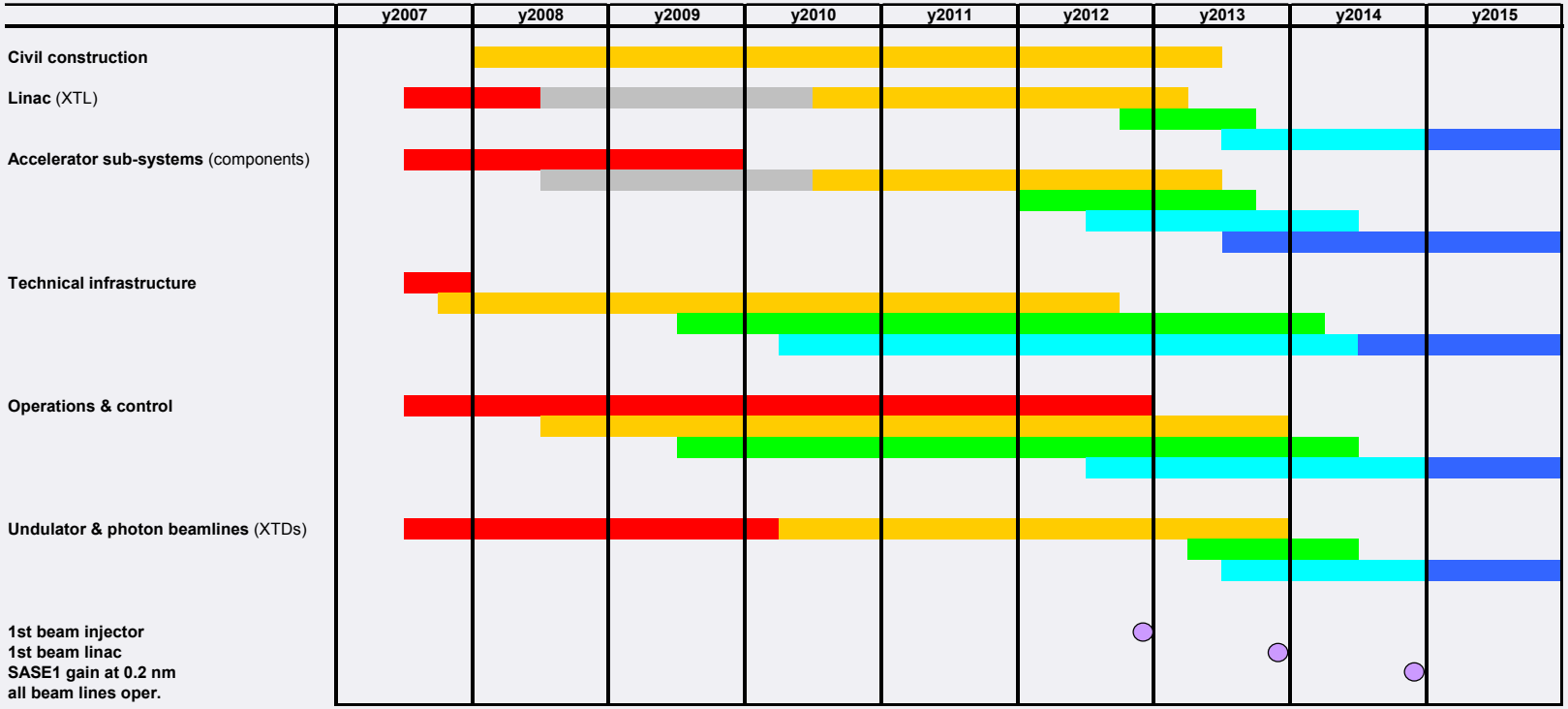

Improvements needed for XFEL

- Field regulation :
  - Short term: Improve by factor 3 (0.03 deg. → 0.01 deg.
  - Phase drifts: Improve by factor 10 (2ps → 0.2 ps)
- High Availability
- Increase computational power (FPGA,DSP, CPU)
  - Support advanced applications and automation
- Need modular design (also define standards)
  - Upgradeability, maintenance
  - Useable by other WP, support collaborative efforts
- Automation
- Diagnostics
- Documentation (initially: good requirements)

New WBS for LLRF under Discussion

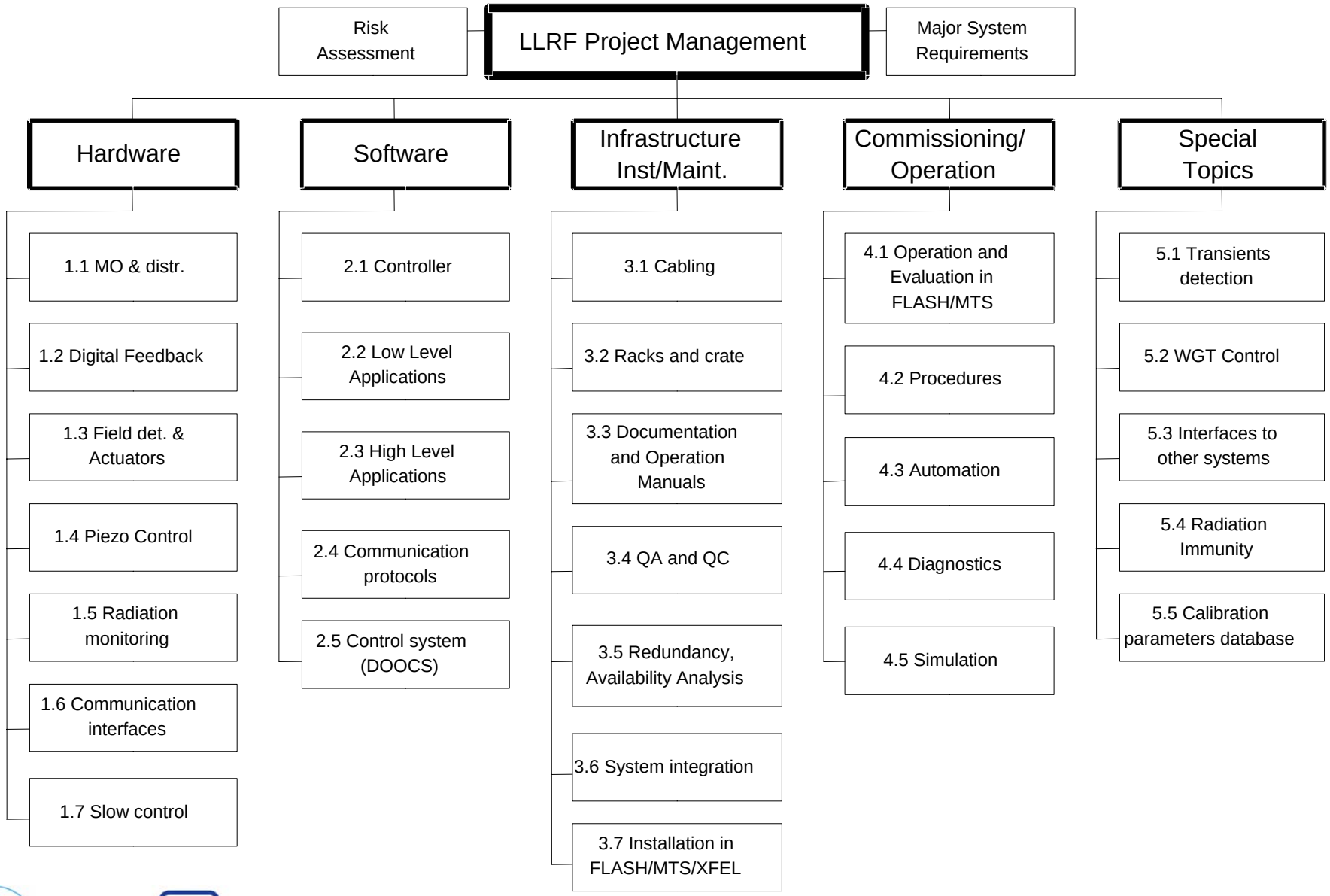

Defining Deliverables (1)

Phase	Phase description	Month/ phase	Total mont hs	Date
Ph. 0	Project plan (MS Project)	0 m	0 m	09/2007
Ph. 1	Requirements (Rhapsody, Doors)	1-2 m	1 m	09/2007
Ph. 2	Conceptual design	1-2 m	2 m	10/2007
Ph. 3	R&D of critical components	1-6 m	6 m	2/2008
Ph. 4	Specification	2-3 m	6 m	2/2008
Ph. 5	Detailed design (documentation)	1-6 m	8 m	4/2008
Ph. 6	Prototype	1-3 m	12 m	8/2008
Ph. 7	Evaluate prototype in lab. test	1-2 m	14 m	10/2008
Ph. 8	Evaluate prototype in accelerator	1-2 m	14 m	10/2008
Ph. 9	Improve design	1-2 m	17 m	01/2009
Ph. 10	Repeat 7-9 until design is finalized	nx(1-3)m	n=0	n=0

Defining Deliverables (2)

Phase	Phase description	Month/ phase	Total months	Date
Ph. 11	Procure components	1-2 m	18 m	02/2009
Ph. 12	Produce several pre-production systems	1-6 m	20 m	04/2009
Ph. 13	Perform quality control of fab. systems	1-2 m	26 m	10/2009
Ph. 14	Evaluate systems in test stand (report)	1-2 m	28 m	12/2009
Ph. 15	Full production run	1-6 m	30 m	02/2010
Ph. 16	Quality control	1-2 m	32 m	04/2010
Ph. 17	Install systems	1-4 m	36 m	08/2010
Ph. 18	Commission systems	1-4 m	40 m	12/2010
Ph. 19	Operate systems	not spec.	?	?
Ph. 20	Maintain systems	not spec.	?	?
Ph. 21	Upgrading systems	not spec.	?	?

Examples for basic design vs future upgrades

Item	Basic	Upgrade
M.O. and Distribution	• MLO as diagnostic for MO stability	Automatic failover with MLO.
Downconverters and Digital Feedback	• Partially redundant FF • Cal. Ref. for selected reference channels	• Fully redundant feedforward • Calibration reference for all channels
Controller	• Field detection from Probe • GDR and SEL mode • FF and Fdbck	• State estimator using forward/reflected wave • Downconverter linearity correction
Automation	• Basic fault recovery • Applications to assist operator	• Intelligent fault recovery • Automated state transition

Examples Basic/Upgrade (C'tnd)

Item	Basic	Upgrade
Diagnostics	• Diagnostics for HW/SW component failures	• Diagnostics for component degradation • Sophisticated problem diagnostics incl. locating problems in other subsystem
High availability	• Basic exception detection and handling • Basic SEU immunity in IPMI	• Advanced exception detection and handling • SEU immune controller • Robust applications

Examples: Basic and Advanced Use Cases Acc. Section

Basic Use Cases

- Set and maintain beam end energy or energy gain and phase of accelerator section
- Stabilize end energy with use of beam based feedback
- Monitor radiation levels (neutrons and gammas) in real time

Advanced Use Cases

- Limit field emission and cryo heatload
- Provide rf pulses for machine studies
- Conditioning of cavities/couplers
- Assess performance and limitations of accelerator section
- Diagnose problems and identify the source especially if beam quality is unsatisfactory.

Examples: Basic and Advanced Use Cases RF Station

Basic Use Cases

- Establish moderate RF power and cavity gradients
- Enable and perform measurements of all LLRF relevant signals
- Stabilize fields for beam operation

Advanced Use Cases

- Set parameters to maximize availability during beam operation
- Optimize parameters for best beam stability
- Assess performance and performance limitations of rf station
- Diagnose problems and identify the source (hardware/software)
- Detect and handle exceptions

Examples for Scenarios

1. Coarse tuning of cavity resonance with motor tuner
2. Compensate Lorenz force detuning
3. By-pass (and un-bypass) cavities
4. Adjust klystron HV for sufficient power margin
5. Set correct timing
   .. rf gate, rf pulse, klystron HV, flat-top with respect to beam
6. Limit field emission in cavities
7. Apply adaptive feedforward
8. (Re)-start missing or faulty llrf servers
9. (Re)-calibrate rf station
10. Calibrate vector-sum with full beam loading
11. Correct downconverter linearity
12. Klystron linearization

LLRF System based on ATCA

ATCA crate pictures

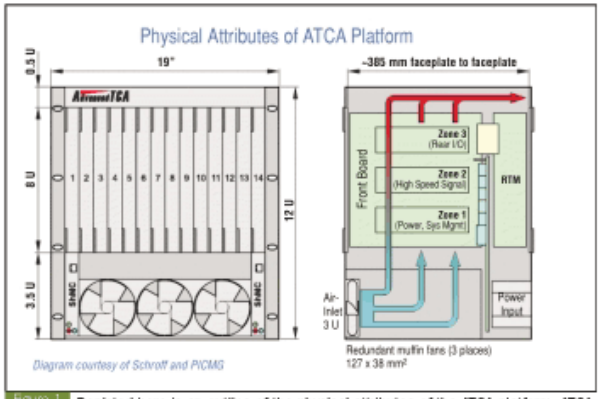

Figure 1 Depicted here is an outline of the physical attributes of the ATCA platform. ATCA provides higher capacity and the ability to mix various types of modules and technologies to enable the convergence of multiple types of equipment and multiple applications in one platform. It also allows rear-mounted modules permitting added functionality per slot or rear interface cabling.

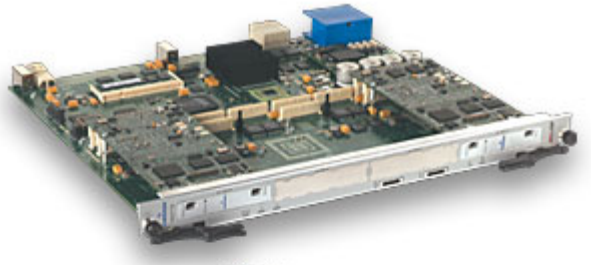

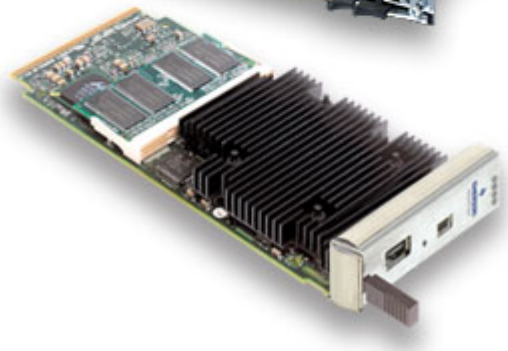

LLRF System Based on ATCA the Carrier Board

AMC Boards:

- ADC (8 inputs)
- Timing
- VM
- Communication module
- Piezo controller
- Diagnostic ADC
- Digital I/O

RTM Modules:

- 32 ch. down-converter

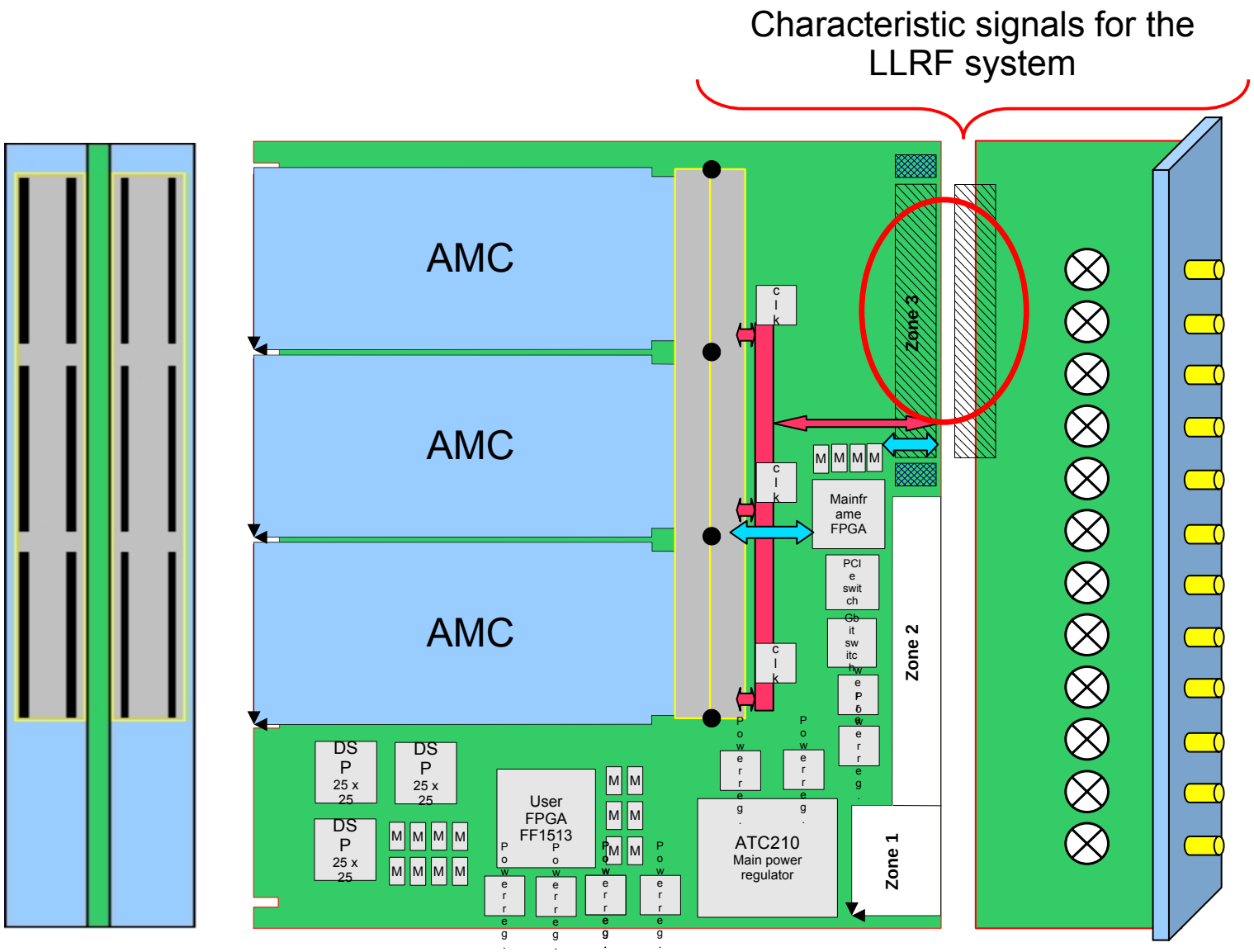

LLRF System Based on ATCA the Connector

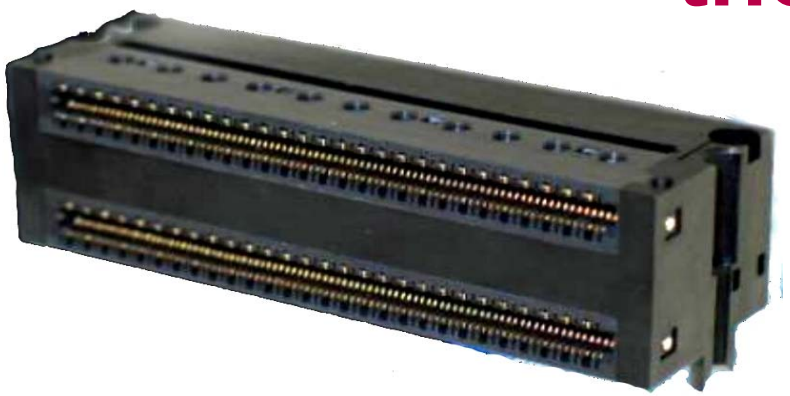

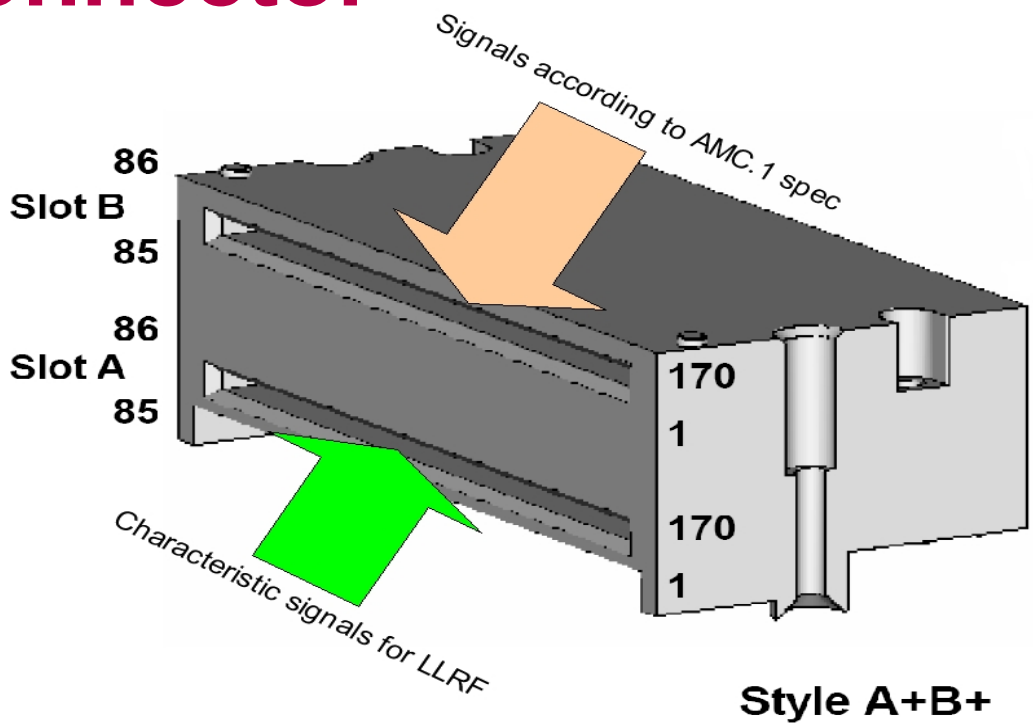

- Connector A+B+ (Yamaichi)
- Attenuation: <1dB at 8GHz and <2dB at 12GHz
- Return Loss: <20dB at 5GHz and <13dB at 8GHz

- Separation of analog and digitals signals

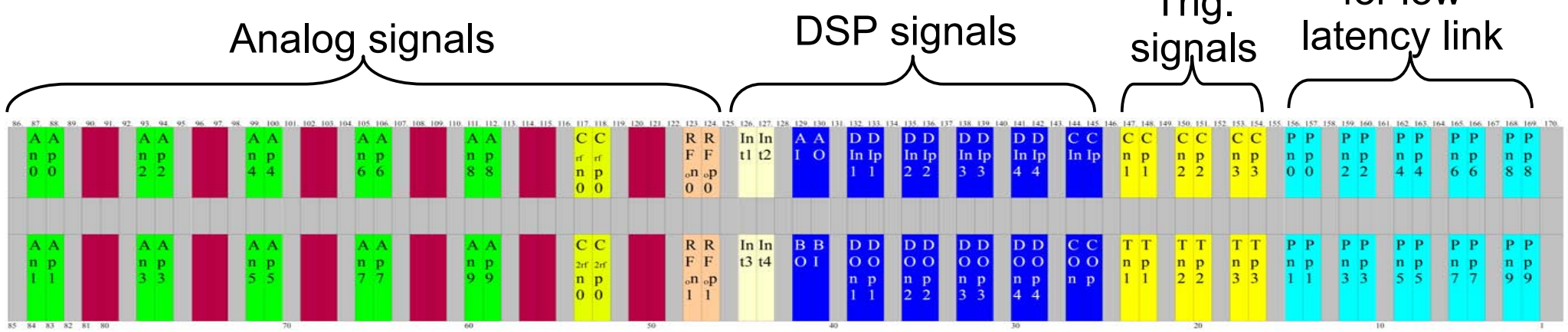

LLRF System Based on ATCA the Carrier Board

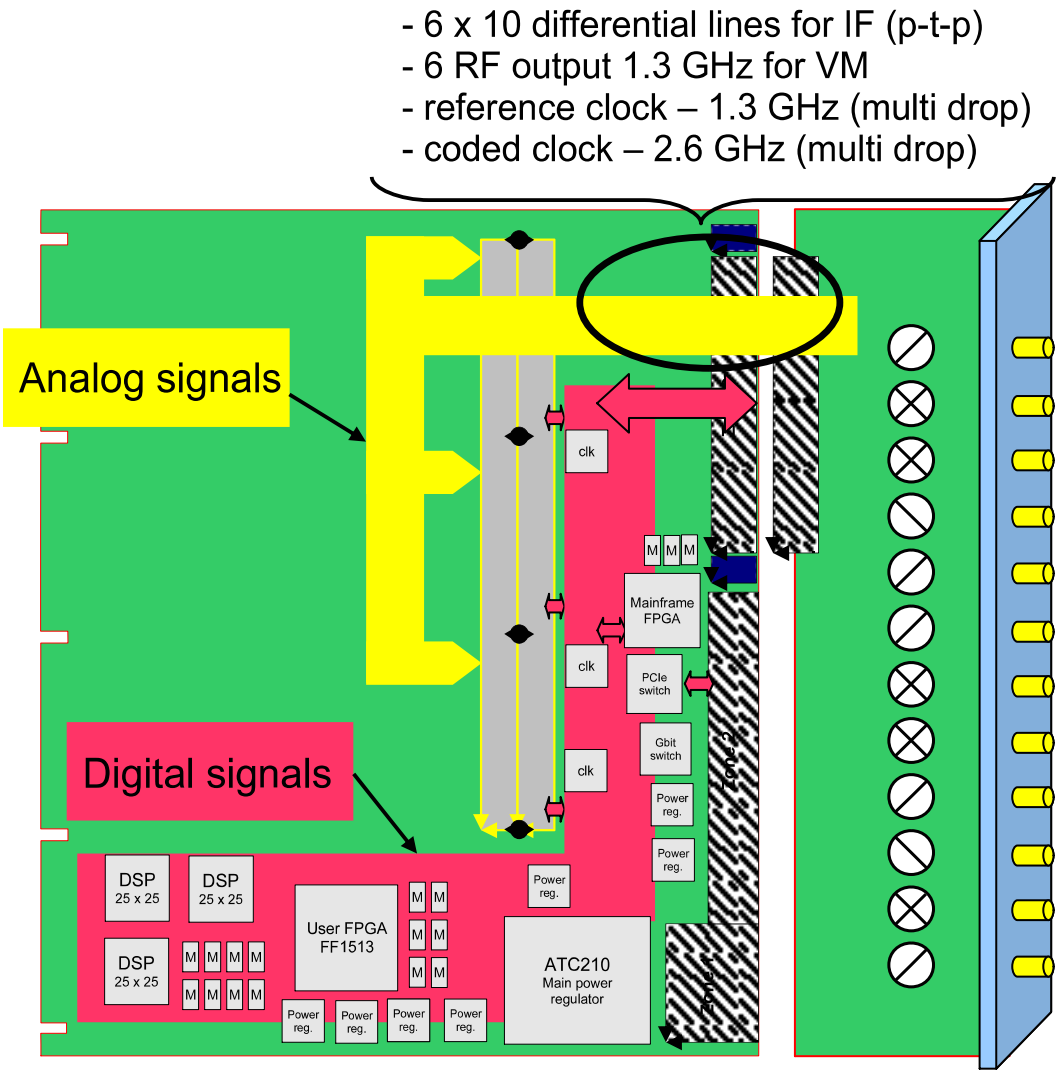

- Analog and digital lines are separated
- For analog signals and fast digital lines strip-lines are designed

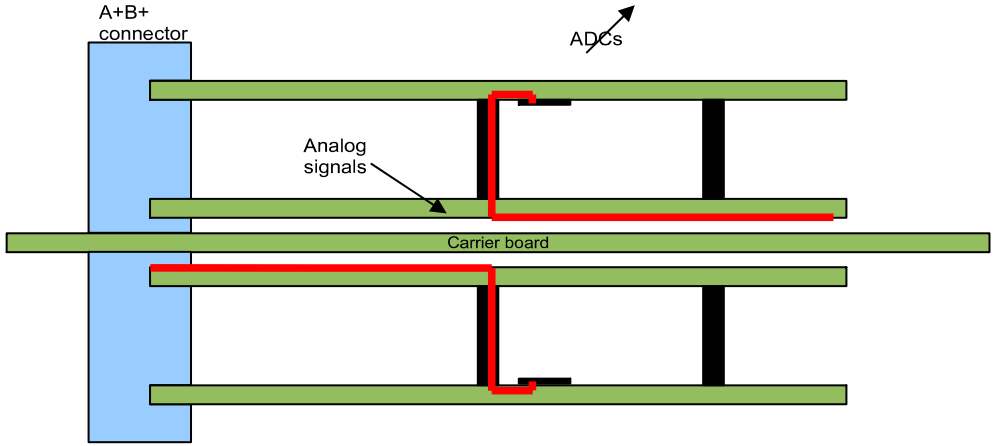

LLRF System Based on ATCA the Carrier Board – clk. distr.

3 x clock & 3 x trigger signals generated at any AMC slot must be distributed to each AMC slot and others carrier boards

- LVDS bus
  - bidirectional buffers
    - OE
    - DIR

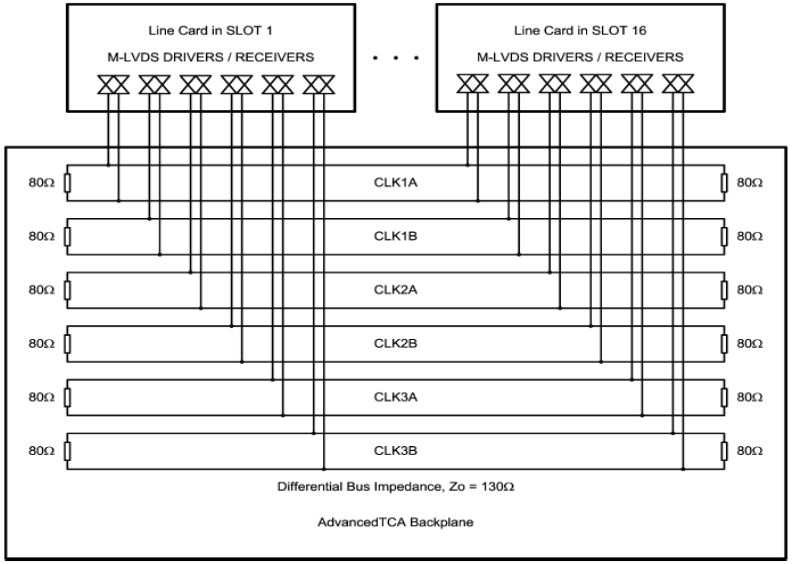

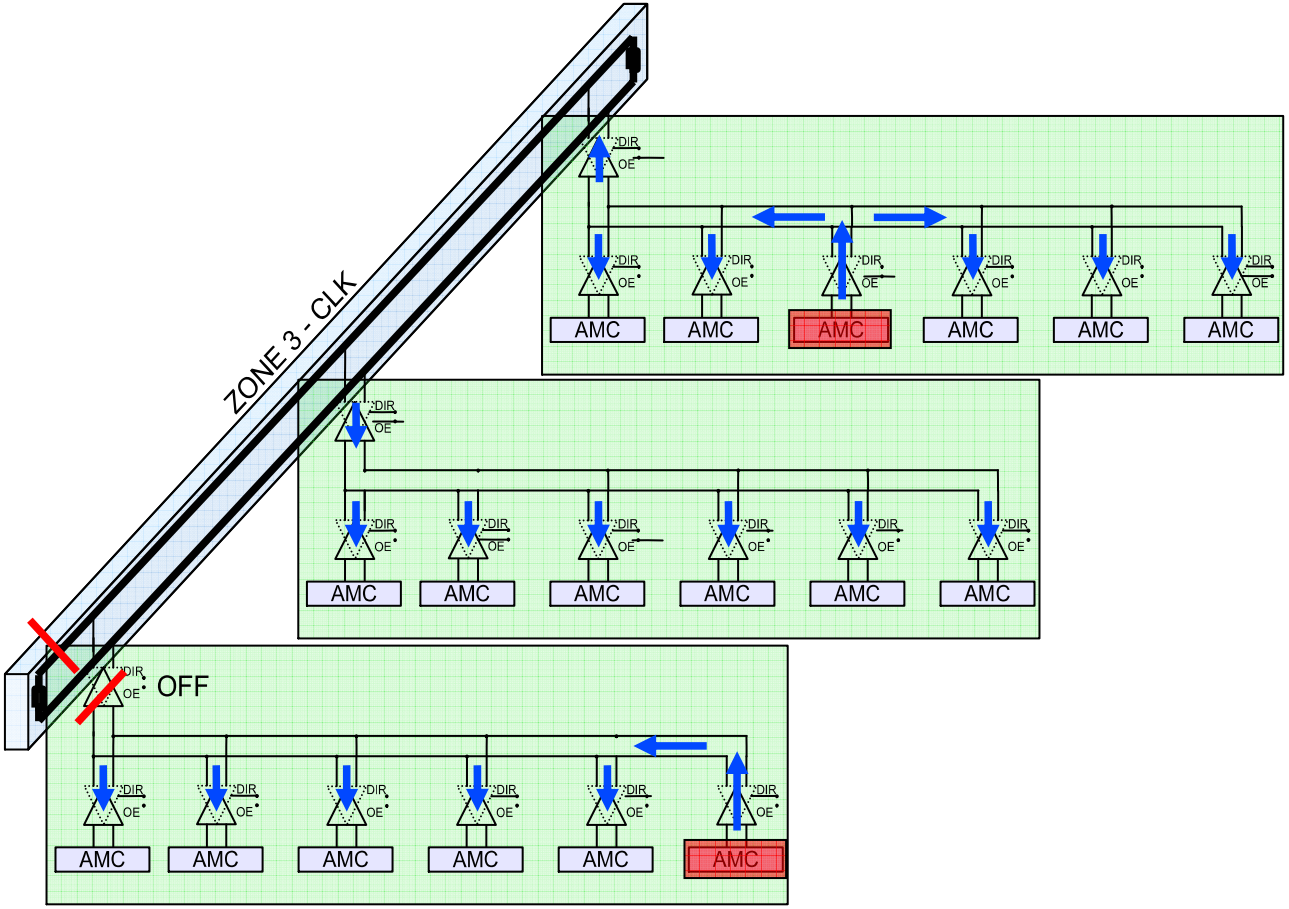

Research on Software for ATCA-LLRF Control System

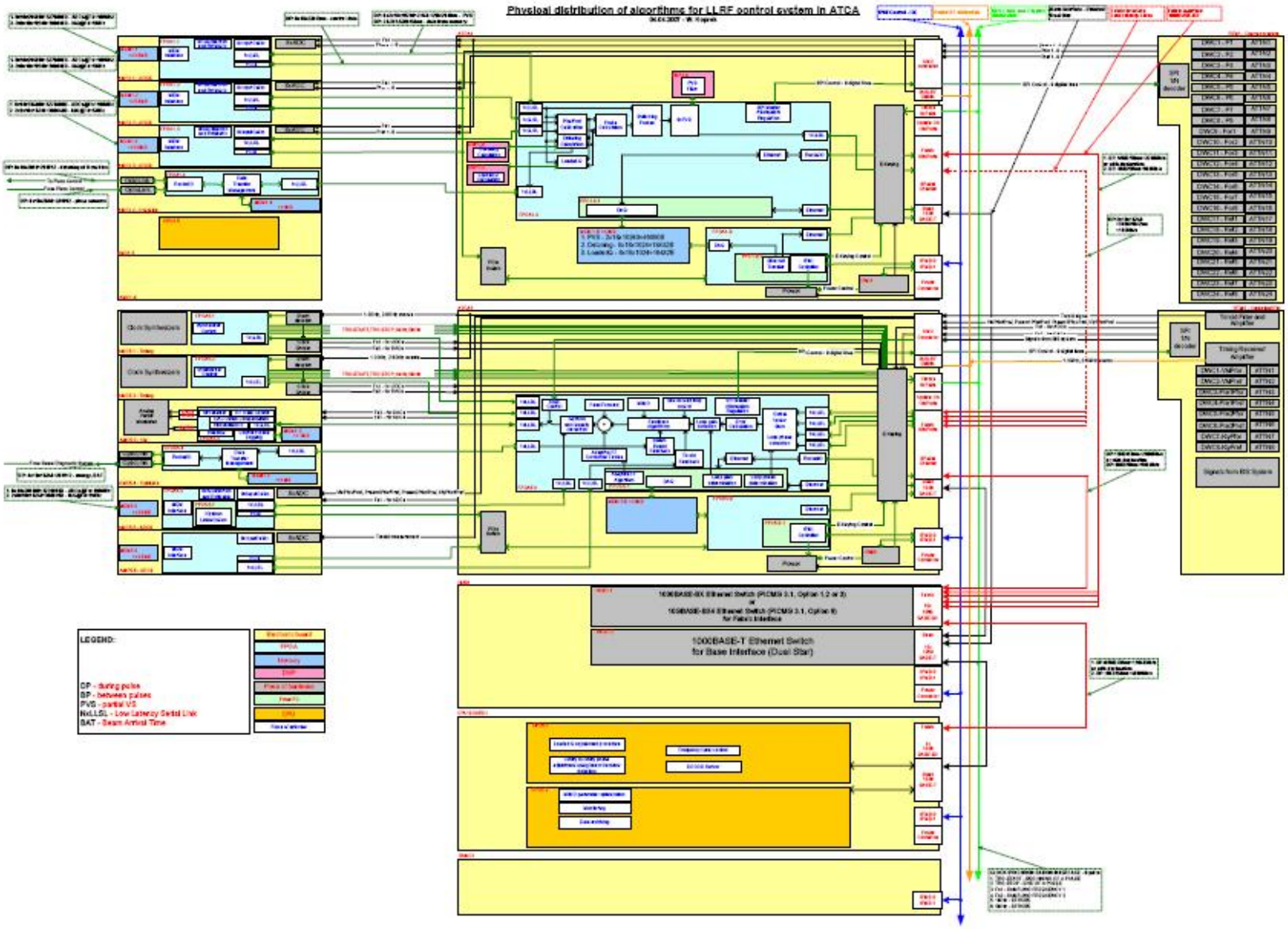

Future LLRF development at FLASH

Distributed Control System

•Distributed control system for ACC1 at FLASH
3xSIMCON-DSP for probe signals, forward and reflected power
1xSIMCON-4 as a concentrator board for DAQ and data processing
Universal optical communication links for data transmission

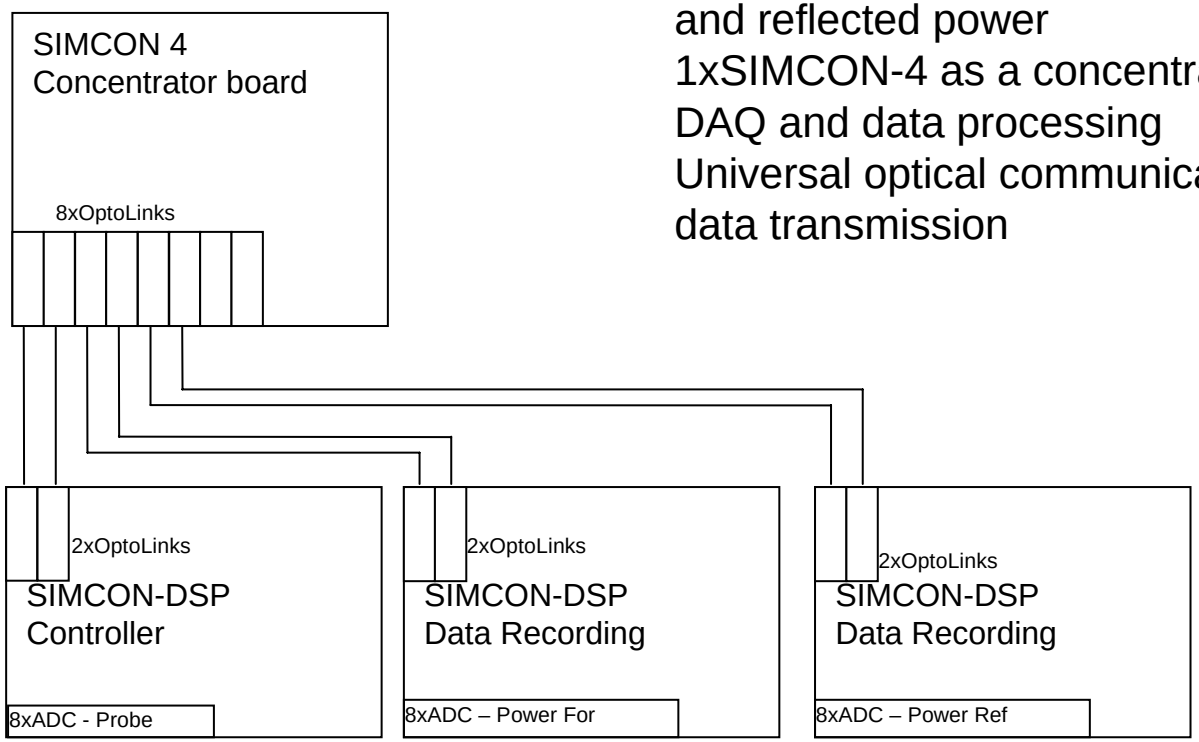

in cooperation with: Wojciech Jalmuzna and Adrian Antoniewicz

ACB2 – test board for new DWC and Beam Based Feedback

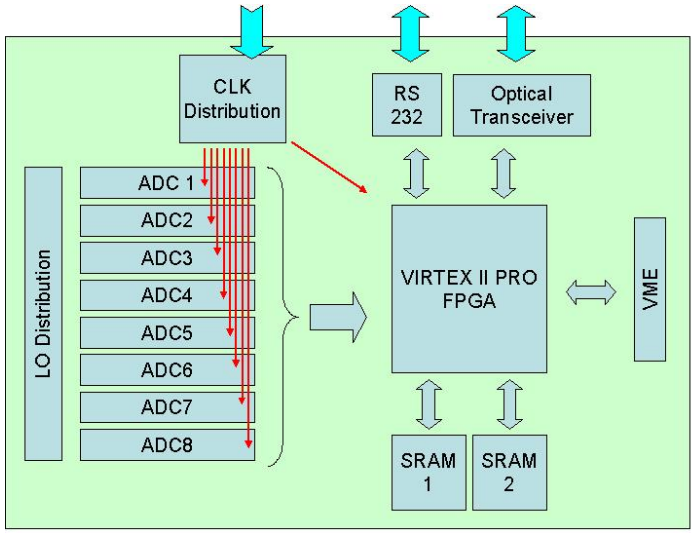

- Universal carrier board with QSE connectors
  Daughter boards: vector modulator, down converter, IQ detectors, fast ADC board
  Test bench for new IQ detection schemes with higher IF (10-100MHz)
  Platform for test of beam diagnostic and beam based feedback

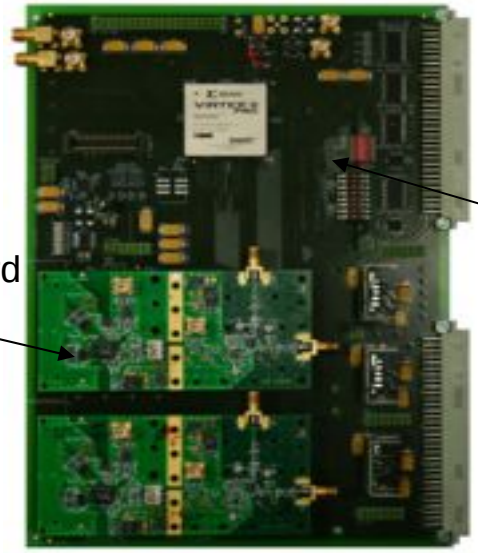

in cooperation with:

Wojciech Jalmuzna, Adrian Antoniewicz, Karol Suchecki, Frank Ludwig, Matthias Hoffmann

DSP - FPGA interface and tools

- TigerSharc – Virtex II Pro
- Fast DSP links (1.2Gb/s) for massive “after pulse” data transmission
- Diagnostic console forwarded through VME
- Remote DSP booting and configuration
- Integration of DSP memory space with existing FPGA memory description

RF cavity simulator status
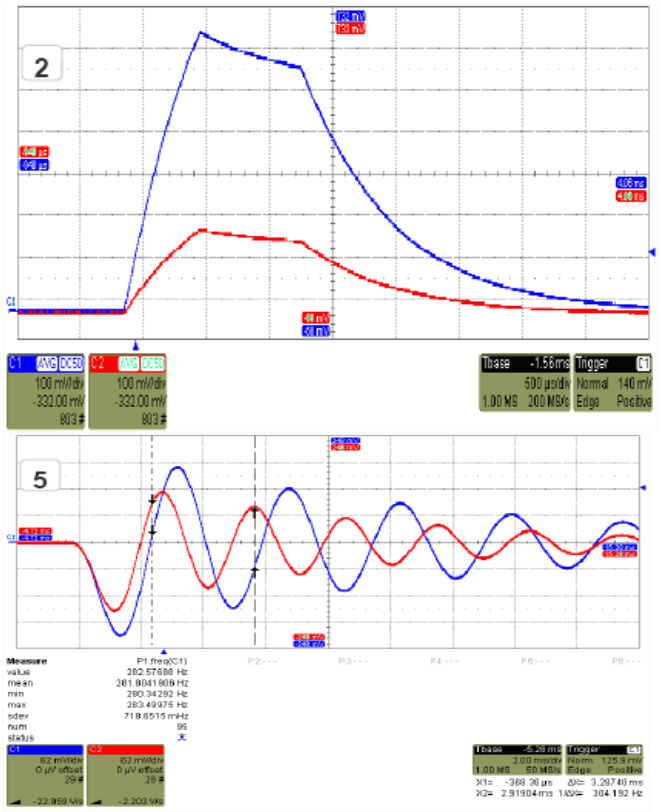
- Based on SIMCON DSP board (10 input ADC, 8 DAC, bigger Xilinx – 2vp50, DSP, PPC)
- Cavity model with LFD, probe, forward and reflected power signals
- Simulation of klystron nonlinearity
- CW operation
- Beam loading
- Fast response (<100ns)
- Quenches and piezo (under development)