Detector Plans For SNS Instruments

Ronald Cooper
SNS Detector Team Leader

12 July, 2002

Introduction

- SNS instrument scientists and instrument design teams are designing twelve instruments
- Five more have been proposed
- For almost all instruments, detector requirements exceed the capability of detector systems that are currently available
- Improvements in event rate capability, position resolution, and detection efficiency are needed
- Construction is underway and instrument installation schedules are being determined
- The initial detector suite will limit the performance of the instruments in most instances
- An upgrade plan will be necessary to bring the SNS to its full potential

The Spallation Neutron Source

Instrument Layout

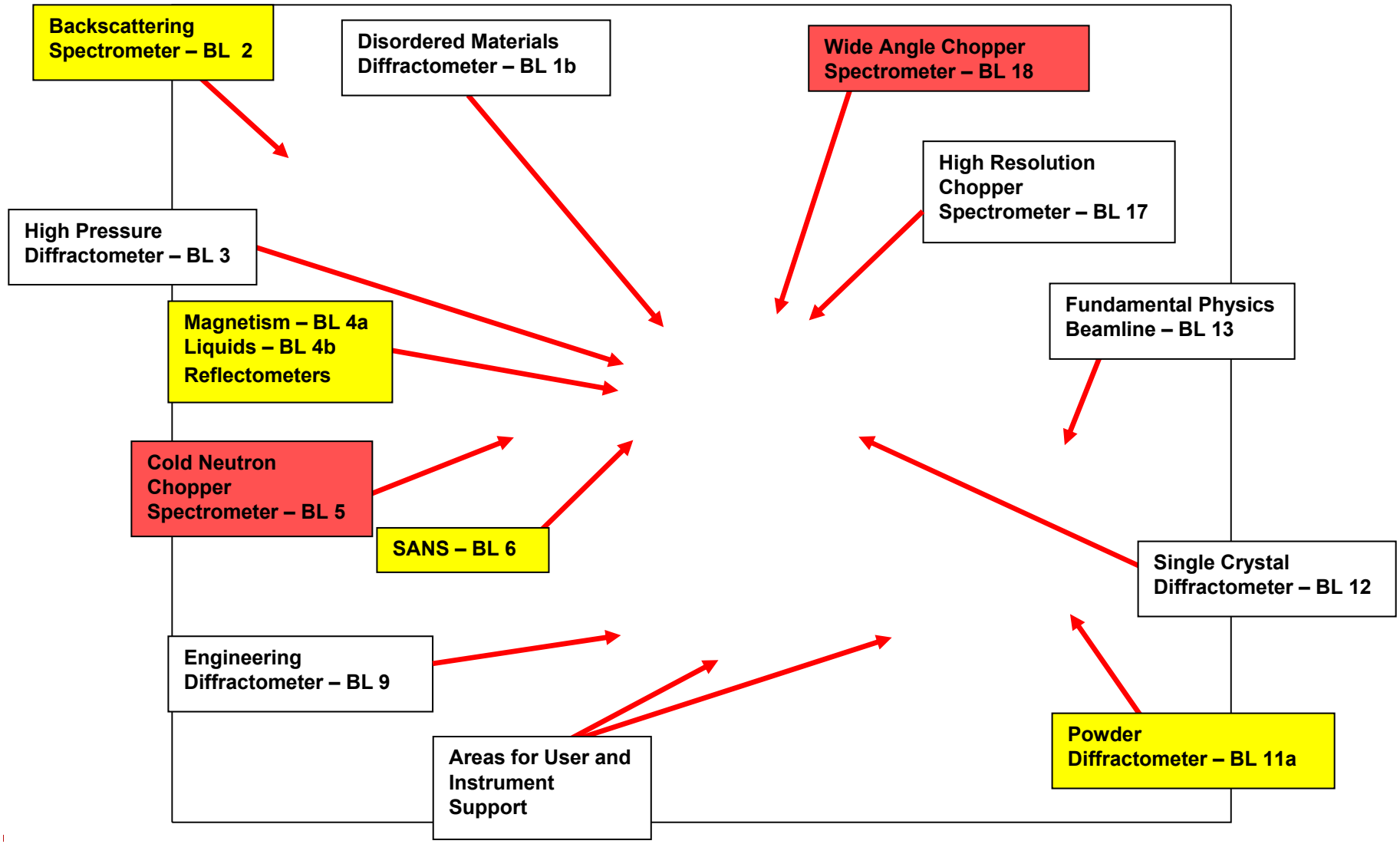

EFAC Approved Instruments

- Four Inelastic Spectrometers
- A Powder Diffractometer
- An Engineering Instrument
- Two Reflectometers
- A SANS Instrument
- A High Pressure Diffractometer
- An Amorphous Materials Diffractometer
- A Single Crystal Diffractometer

Outline

- Brief descriptions of the instruments and their unique requirements
- Some detector options

Backscattering Spectrometer

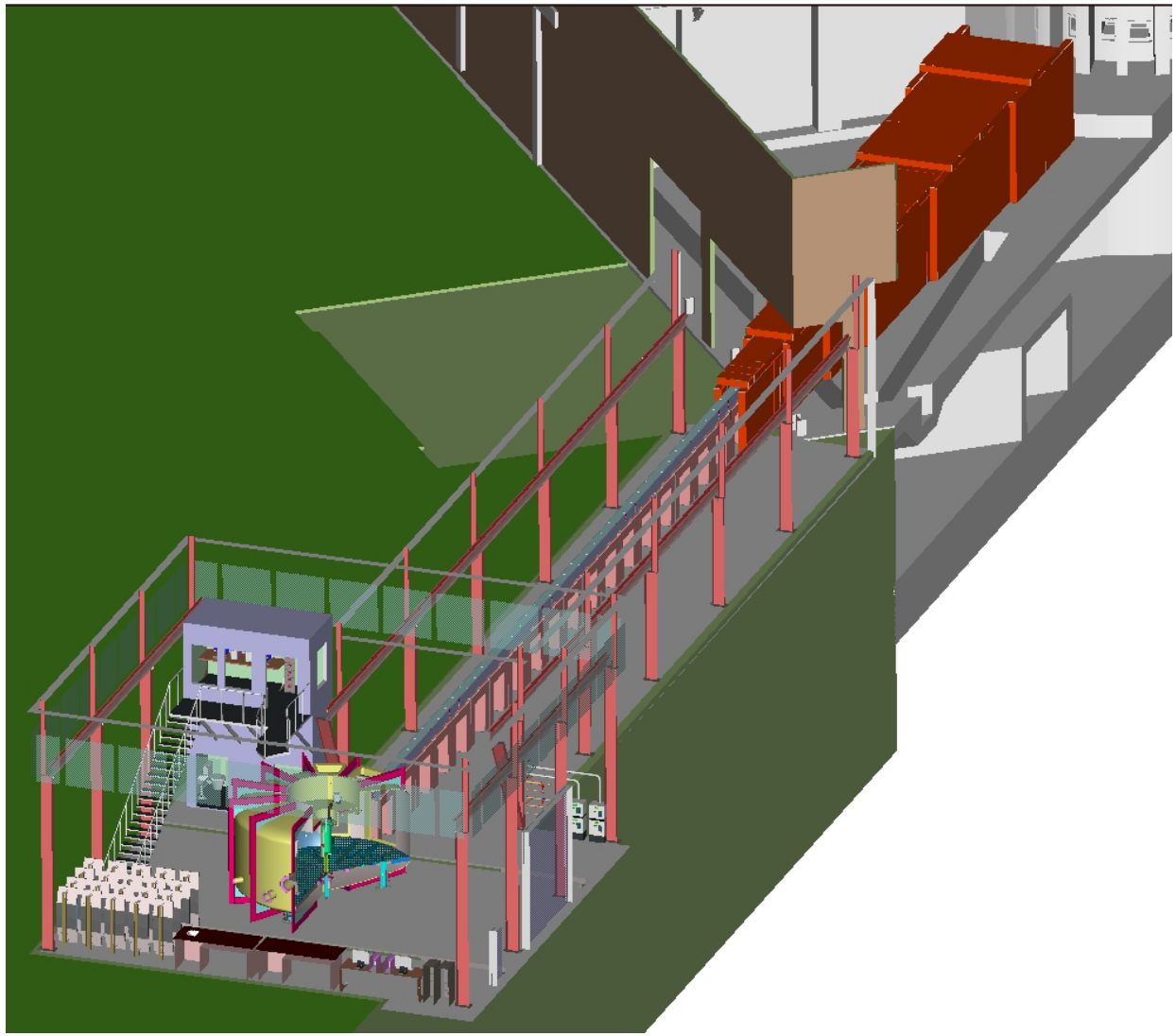

Cross Section of the Scattering Chamber

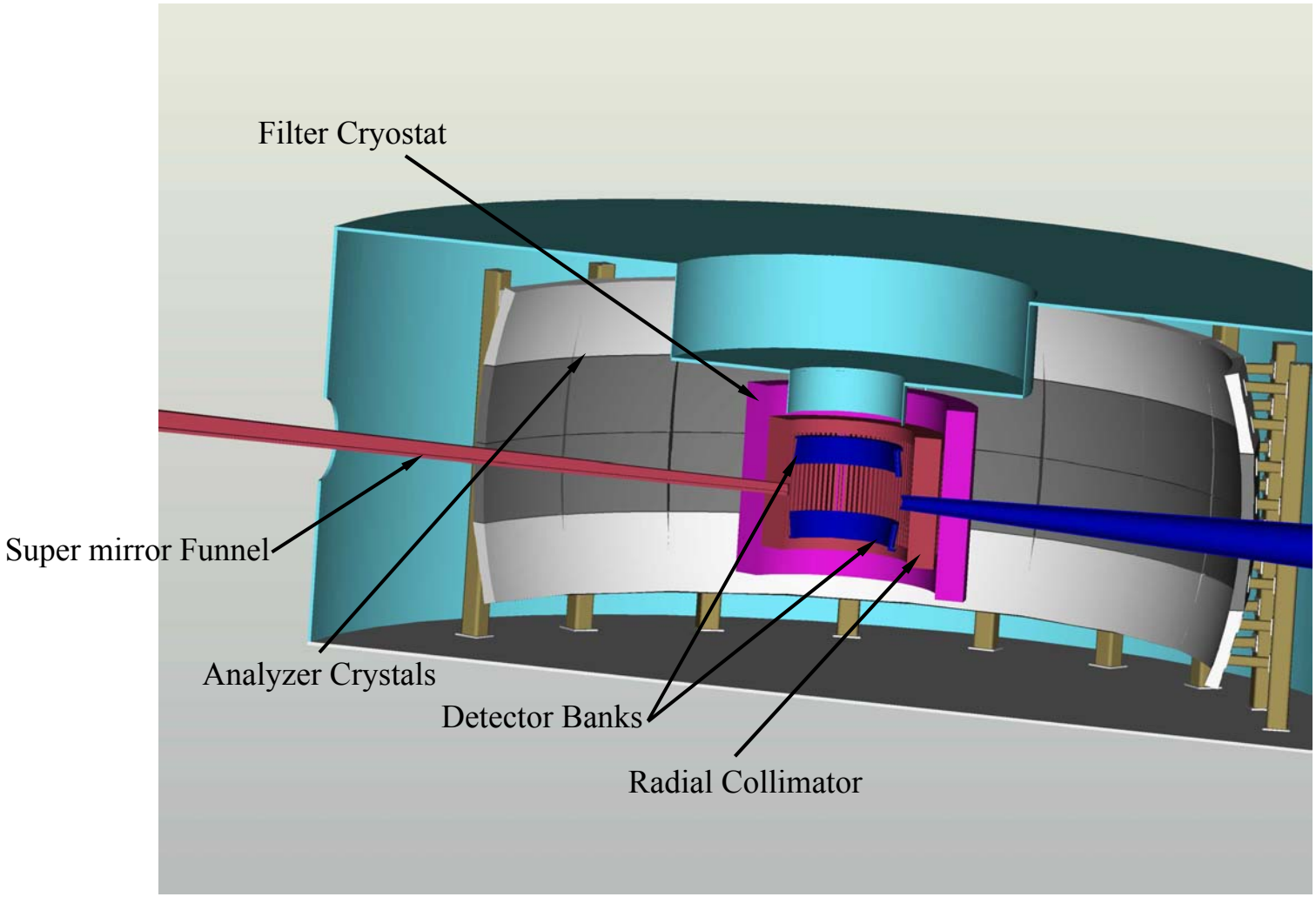

Backscattering Spectrometer Requirements

- Instrument Scientist: Ken Herwig, kherwig@anl.gov
- Detectors in a vacuum
- High magnetic fields
- 3 or 6 Å neutrons
- Total detector area $1m^2$
- Detectors near sample – minimize gamma sensitivity
- Stability over several days is required
- Position resolution: 1cm x 1.3cm
- Maximum rate: 2,000 neutrons in 80 μs, uniformly distributed

- Possible detectors:
- ^{3}He filled LPSD tubes
- 2-dimensional ionization chamber

10-100 μeV Cold Neutron Chopper Spectrometer

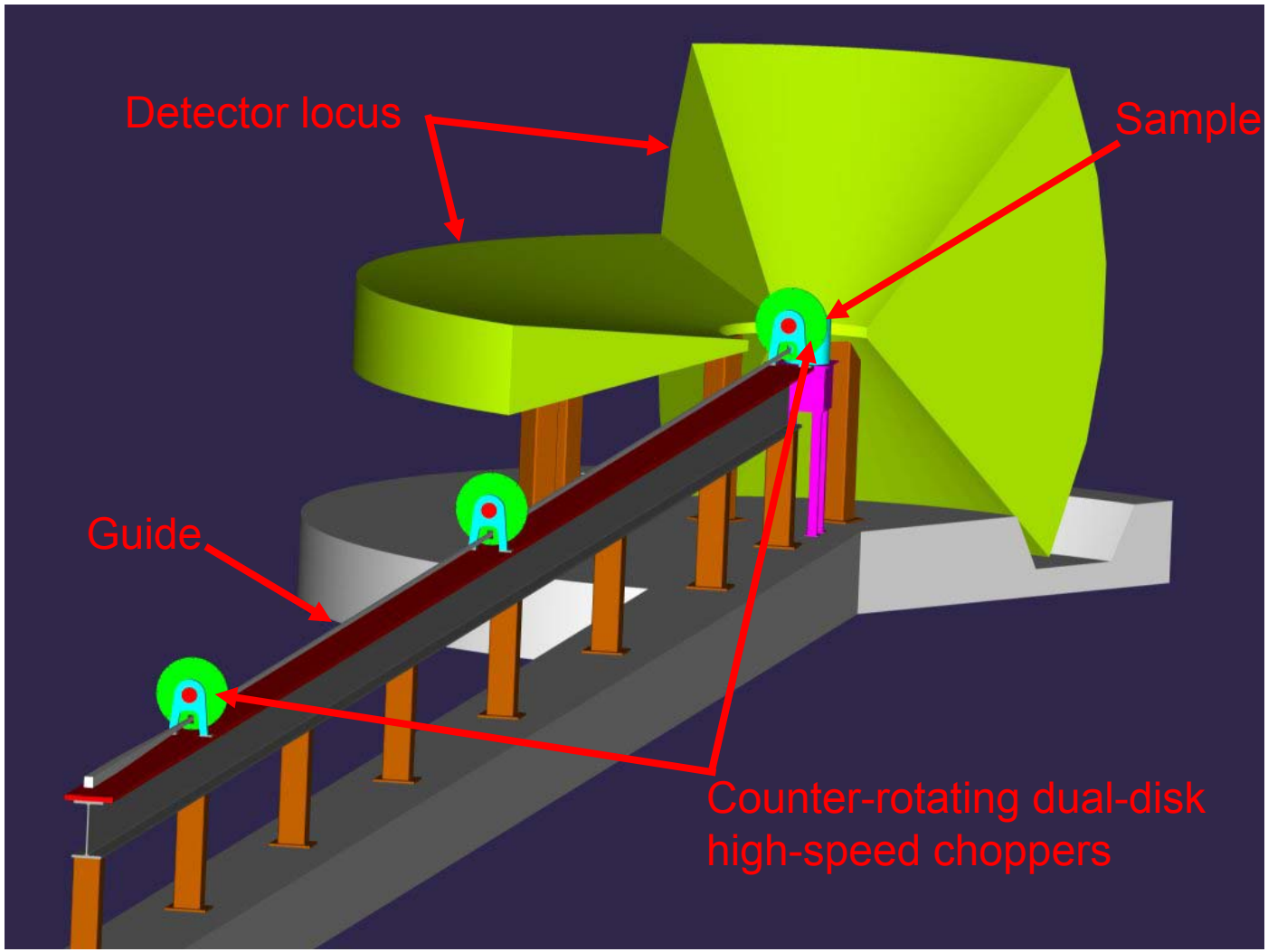

CNCS Chopper Requirements

- Instrument Contact: Paul Sokol: paul@sokol.phys.psu.edu
- Detectors in inert atmosphere
- Total detector area $20m^2$
- 50% efficiency for 50 meV neutrons
- Stability over several days is required
- Position resolution: 2.5cm x 2.5cm
- Maximum rate issue: Recover from elastic peaks
- Minimize sensitivity to gammas

- Possible detectors:
- ^{3}He filled LPSD tubes
- LPSDs in shared volume
- Boron coated straw tubes

Fermi Chopper Instruments, 6m and 2.5m

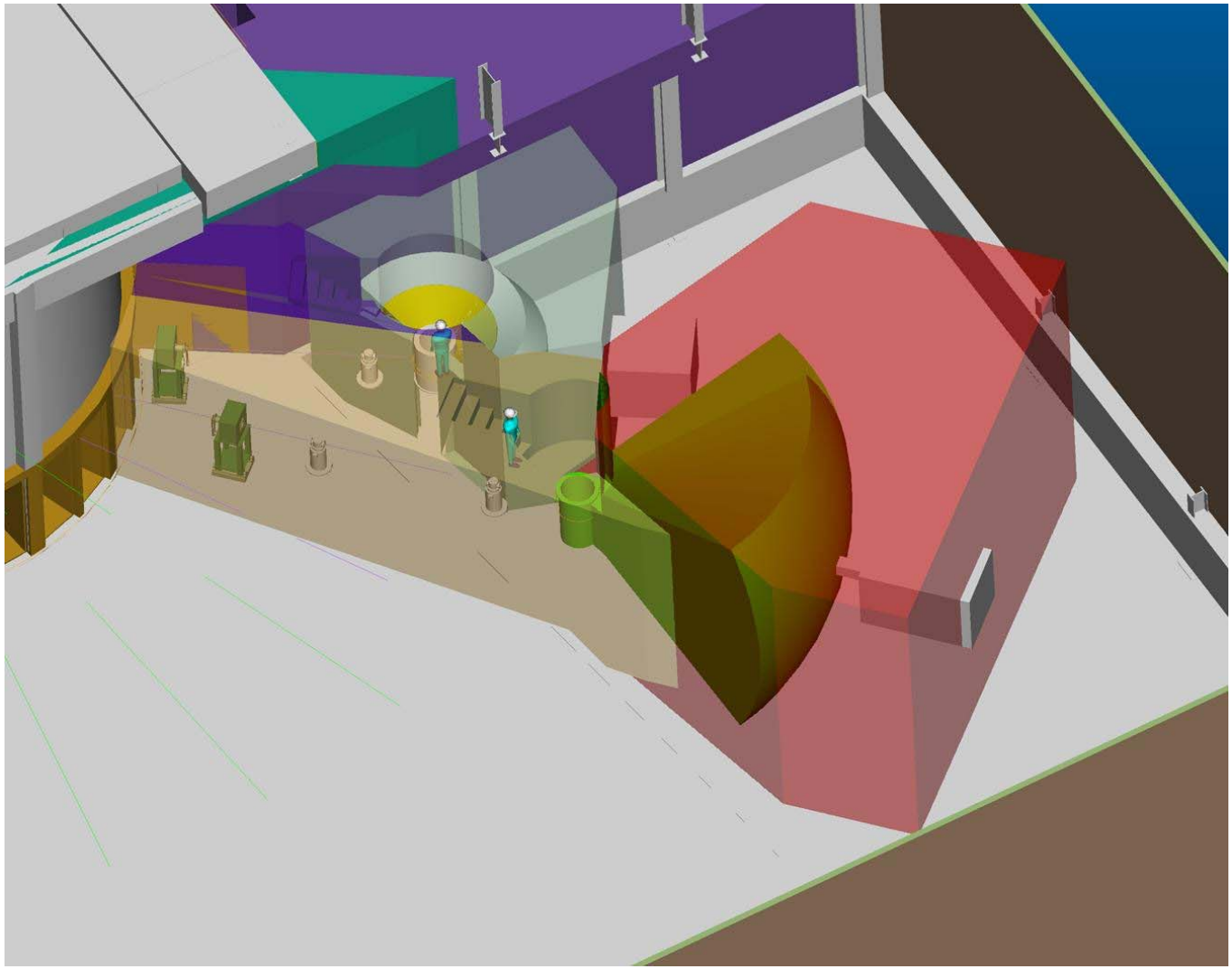

Requirements For Chopper Spectrometers

- ARCS Instrument Scientist: Doug Abernathy, dabernathy@anl.gov
- High Resolution: Garrett Granroth, granrothge@ornl.gov
- Prefer detectors in a vacuum
- Total detector area $20m^2$ each
- 50% efficiency for 1 eV neutrons
- Stability over several days is required
- Position resolution: 1cm x 2.5cm
- Maximum rate issue: Recover from elastic peaks
- Minimize sensitivity to gammas

- Possible detectors:
- ^{3}He filled LPSD tubes
- LPSDs in shared volume
- Boron coated straw tubes

Powder Diffractometer

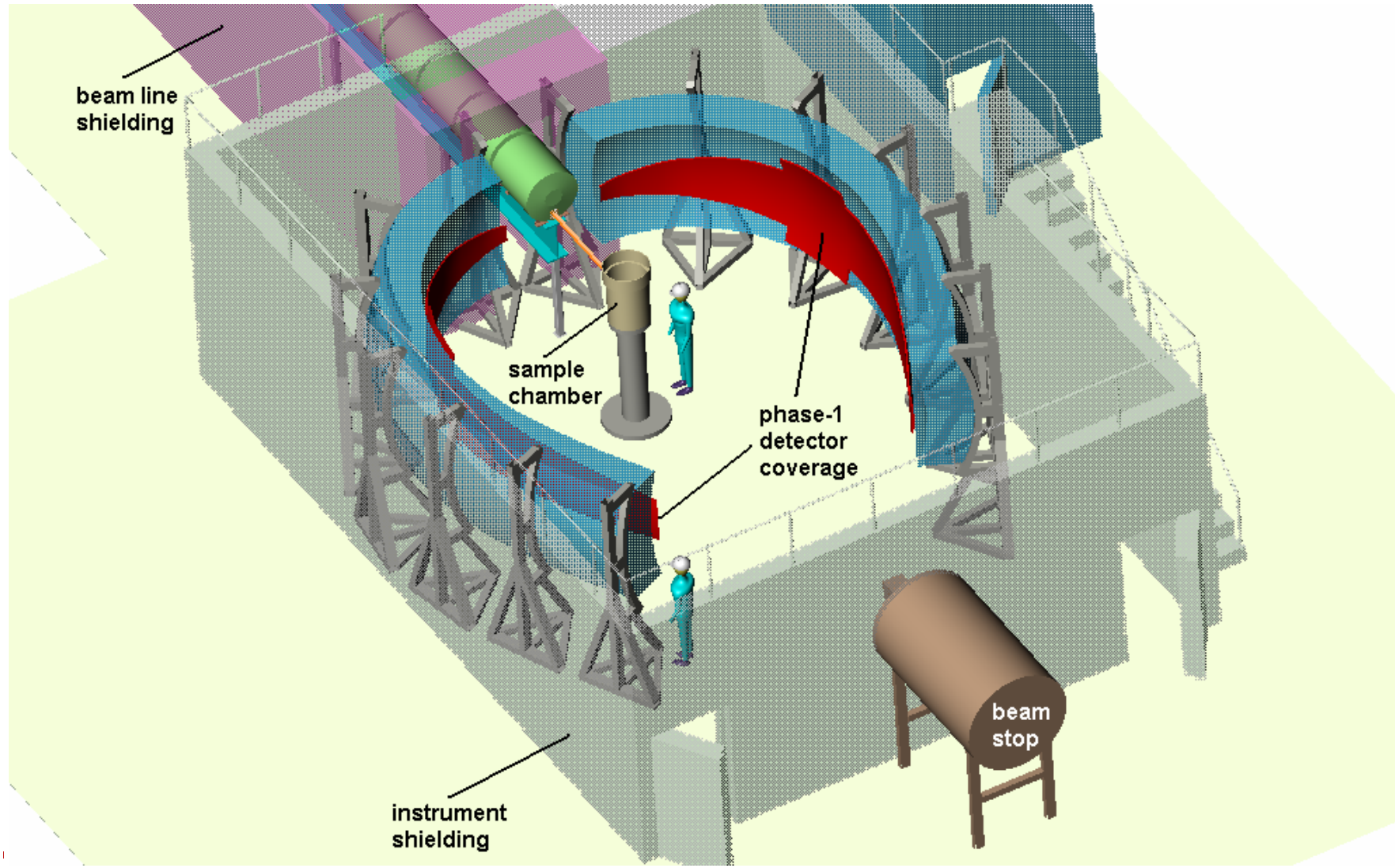

Powder Diffractometer Requirements

- Instrument Scientist: Jason Hodges, hodges@anl.gov
- Detector area: $15m^2$ +
- 50% efficiency for 1 eV neutrons
- Position resolution: 4cm x 0.5cm
- Maximum rate: 10^6 N per second over entire detector system

- Possible detectors:
- Scintillator detectors, ISIS-GEM design
- Scintillator detectors, wavelength shifting fiber design

The Engineering Instrument

Engineering Instrument Requirements

- Instrument Scientist: Xun-Li Wang, wangxl@sns.gov
- Detector area: $11m^2$
- 50% efficiency for 150 meV neutrons
- Position resolution: 2.5cm x 0.5cm
- Maximum rate: 20 n in 100 μs from elastic peaks

- Possible detectors:
- Scintillator detectors, ISIS-GEM design
- Scintillator detectors, wavelength shifting fiber design
- SANS Detector, 20cm x 20cm ^{3}He filled 2-D PSND

Reflectometers

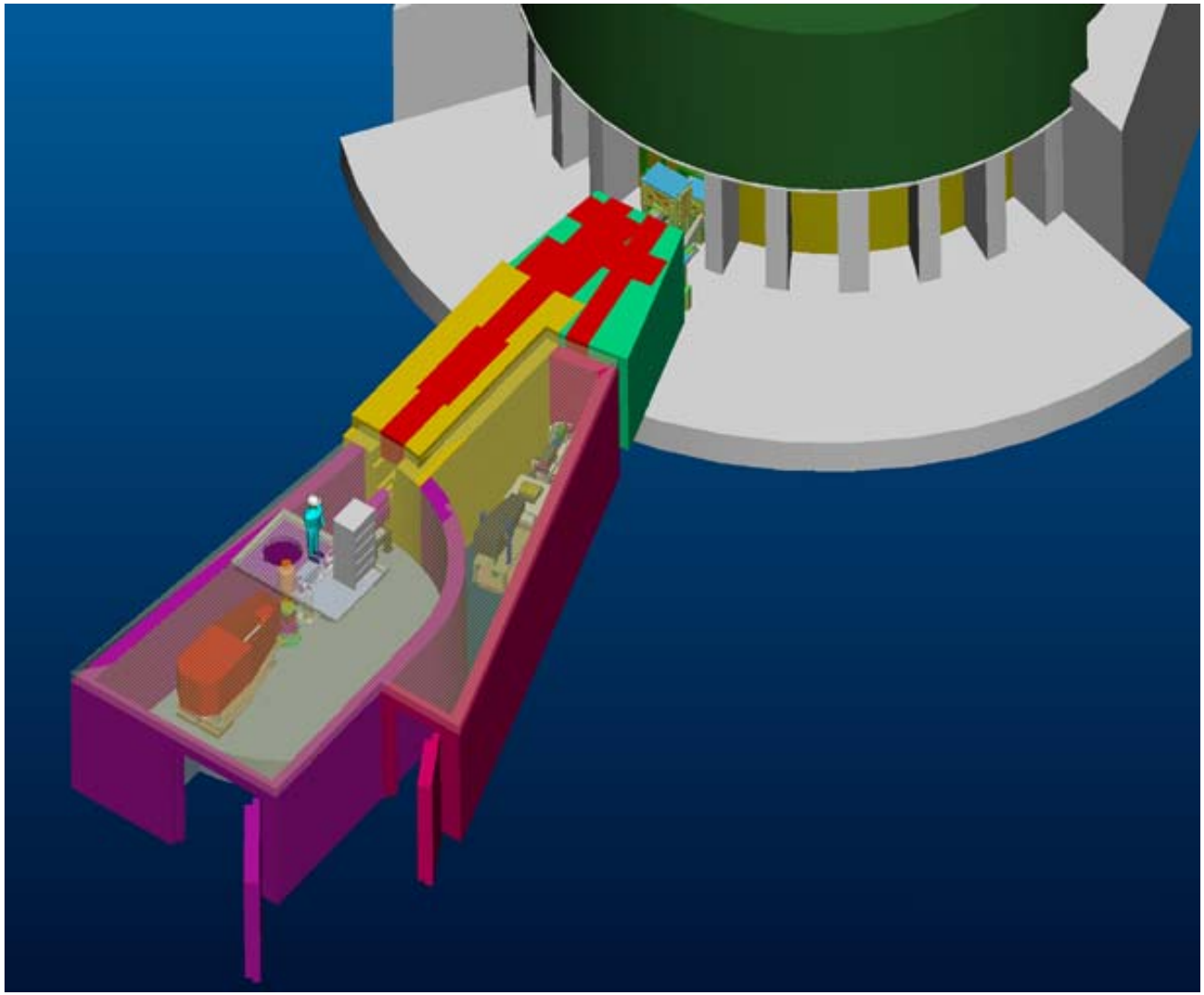

Reflectometers w/o Shielding

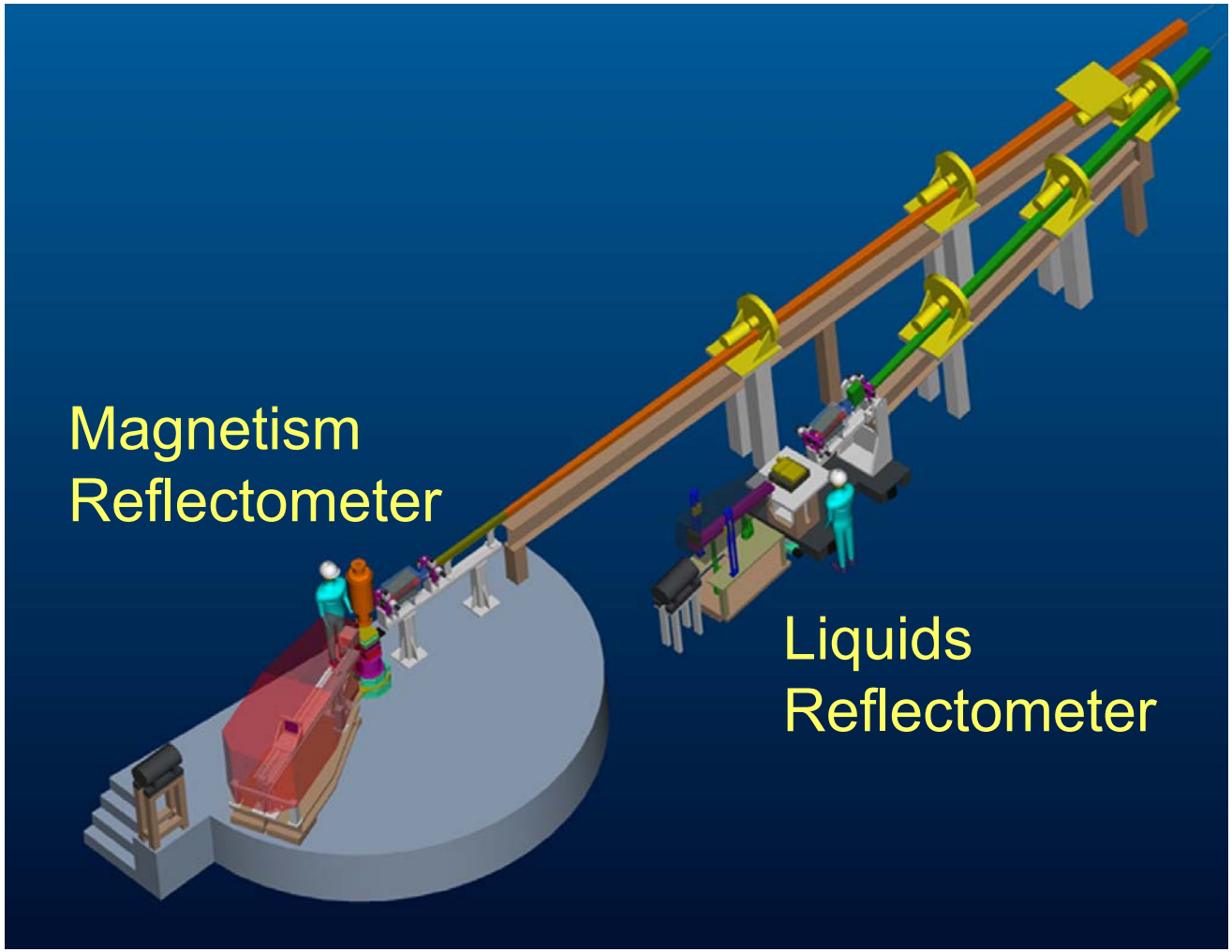

Liquids Reflectometer Requirements

- Instrument Scientist: John Ankner, jankner@anl.gov
- Detector area: 20cm x 20cm
- 50% efficiency for 20 meV neutrons
- Position resolution: 1mm x 1mm
- Maximum rate: 10^6 N per second for 100 pixels, 10^8 total

- Possible detectors:
- ^{3}He filled 2-D PSND
- PSND with parallel pixel read out
- Cascade
- Solid state

Magnetism Reflectometer Requirements

- Instrument Scientist: Frank Klose, fklose@anl.gov
- Detector area: 20cm x 20cm
- 50% efficiency for 30 meV neutrons
- Position resolution: 1mm x 1mm
- Maximum rate: 10^6 N per second for 100 pixels, 10^8 total
- High magnetic fields

- Possible detectors:
- ^{3}He filled 2-D PSND
- PSND with parallel pixel read out
- Cascade
- Solid state

Extended-Q SANS

SANS Instrument Requirements

- Instrument scientist: J.K. Zhao, zhaoj@ornl.gov
- Detector area: 1m x1m SANS, 0.8m^2 high angle bank
- 50% efficiency for 80 meV neutrons
- Position resolution: 5mm x 5mm
- Maximum rate: 5x10^7 N per second
- Gamma sensitivity is a primary issue

- Possible detectors:
- ^{3}He filled 2-D PSND for SANS
- Pixel read out ionization chamber
- ^{3}He filled tubes for high angle bank

High Pressure Diffractometer

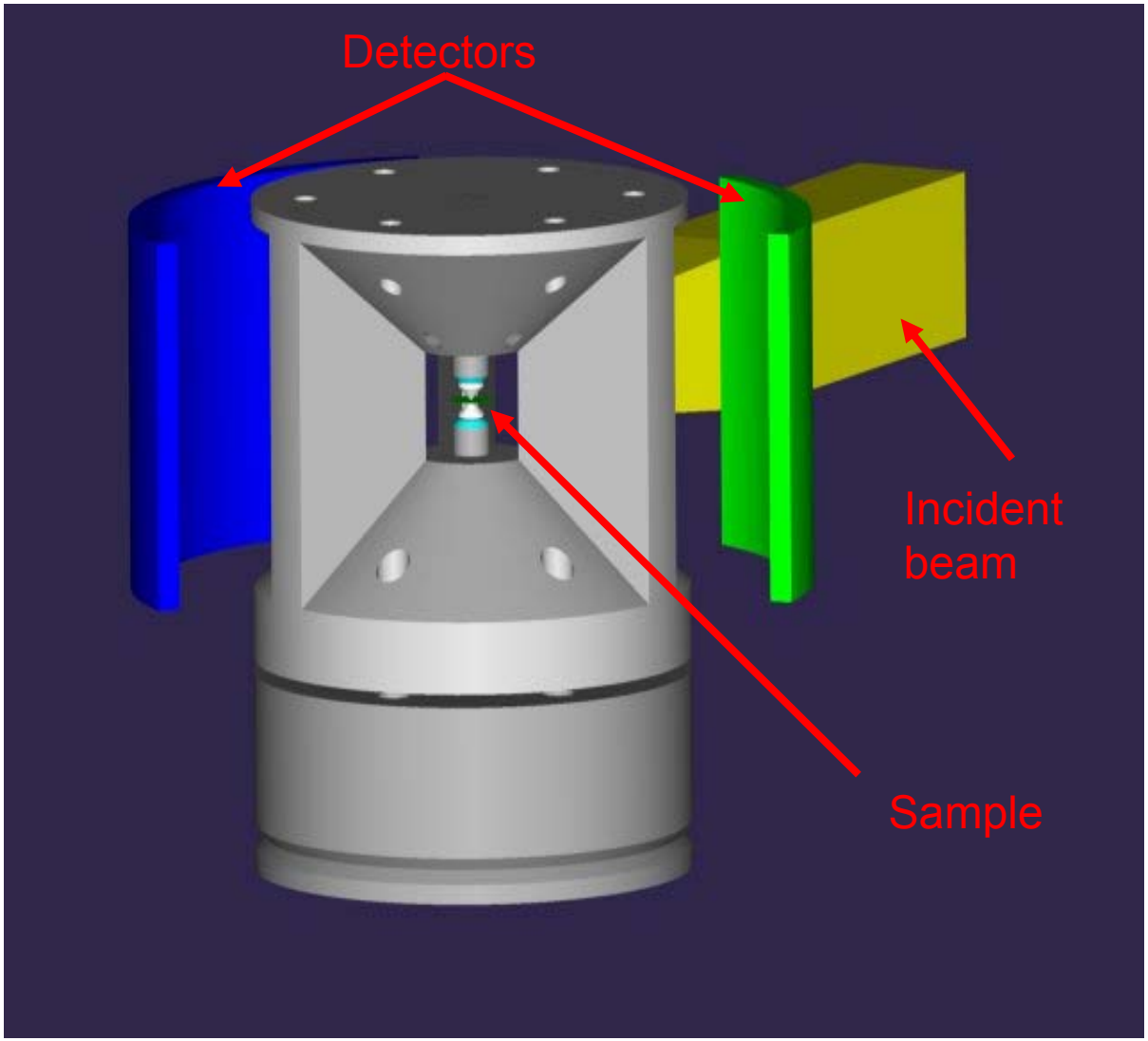

High Pressure Instrument Requirements

- Instrument Scientist: Chris Tulk, ctulk@anl.gov
- Detector area: $0.25m^2$ and $0.15m^2$ for high angle bank
- 50% efficiency for 500 meV neutrons
- Position resolution: 1.5mm x 1.5mm
- Maximum rate: 10^4 N per second per peak
- Continuous coverage
- Gamma sensitivity is a primary concern

- Possible detectors:
- Curved ^{3}He filled 2-D PSNDs
- Solid state detector

Disordered Materials Diffractometer

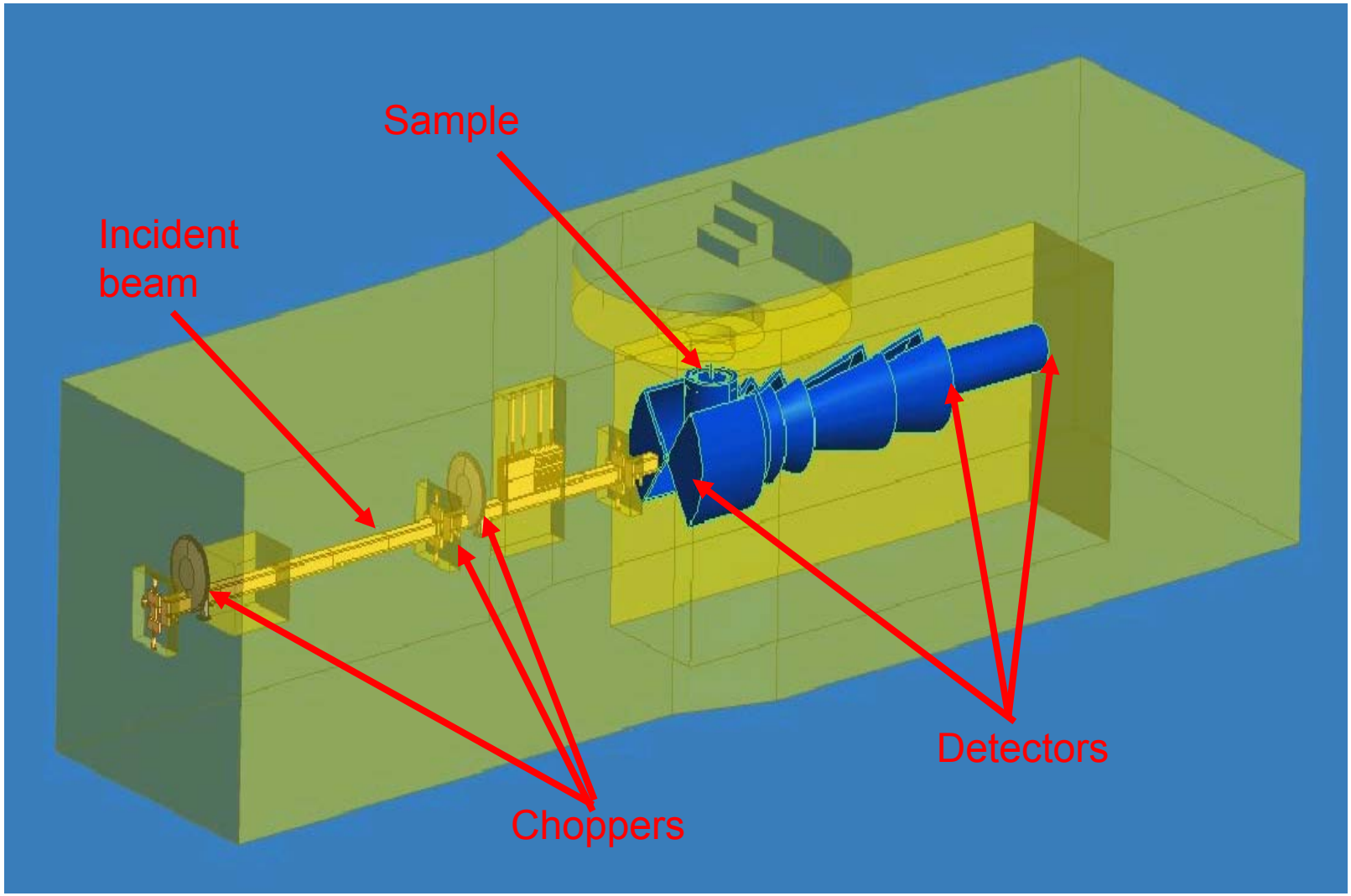

Disordered Materials Diffractometer Requirements

- Instrument Scientist: Chris Tulk, ctulk@anl.gov
- Detector area: 5.5m^2
- 20% efficiency for 50 eV neutrons
- Position resolution: 5mm x 5mm
- Maximum rate: Not an issue for scintillator systems

- Possible detectors:
- Thick, transparent scintillators
- ^{3}He filled LPSD tubes with lower efficiency

Single Crystal Diffractometer

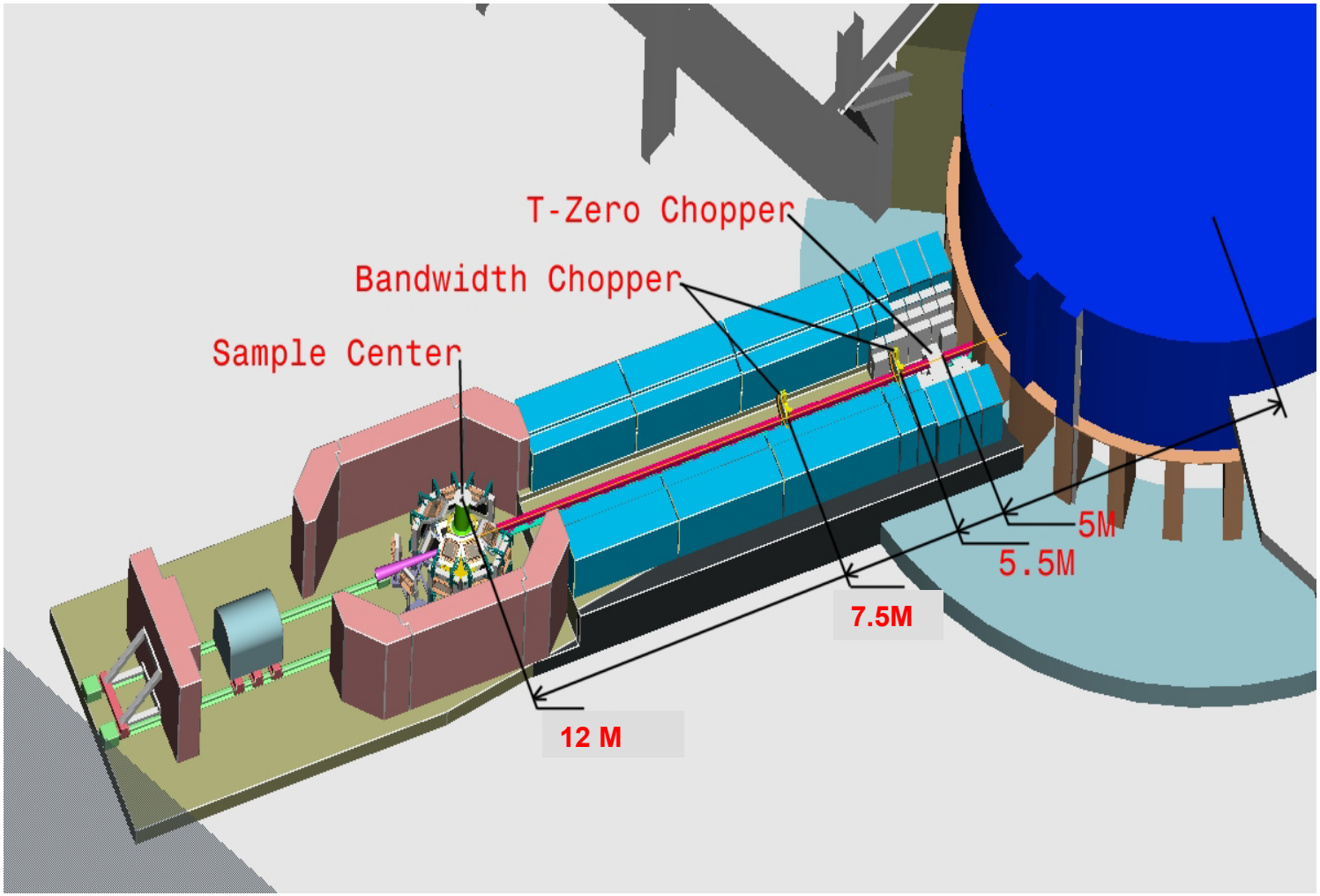

Detectors For Single Crystal Instrument

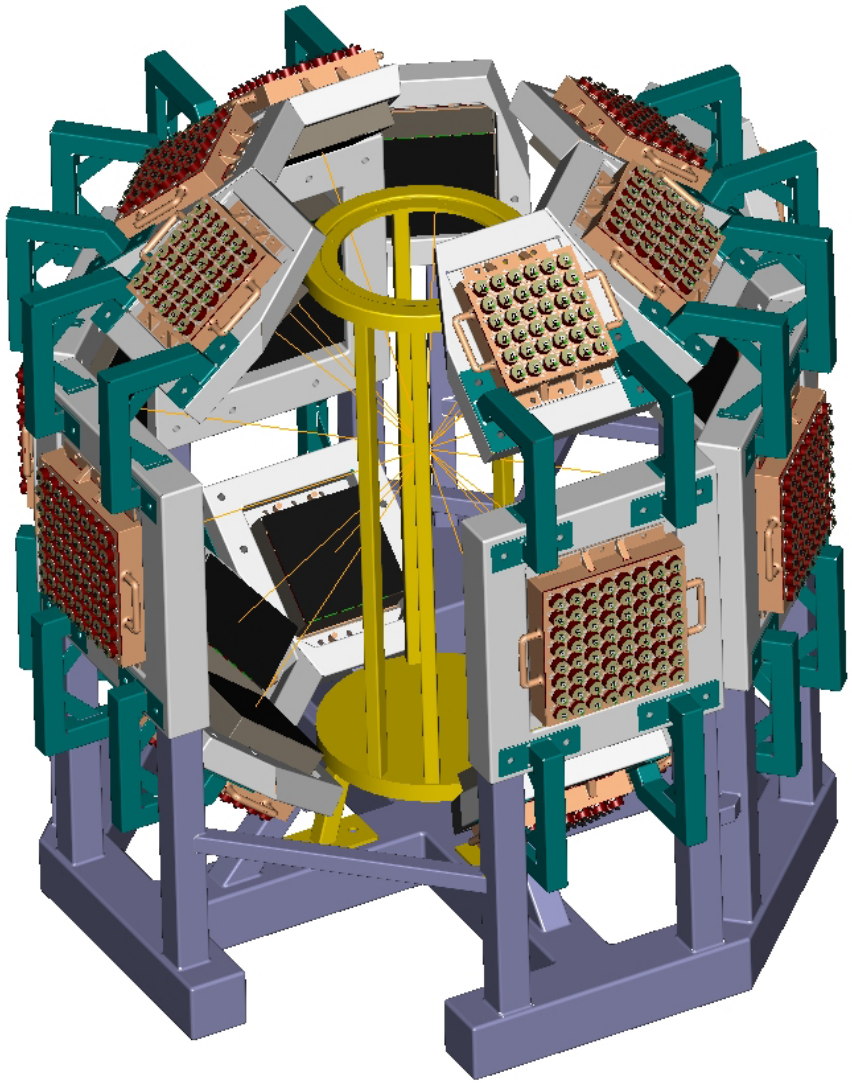

Single Crystal Diffractometer Requirements

- Instrument scientist: Cristina Hoffmann, choffmann@anl.gov
- Detector area: $5m^2$
- 50% efficiency for 350 meV neutrons
- Position resolution: 1mm x 1mm
- Maximum rate: $2x10^4$ N per second per peak
- 10,000 peaks possible (not at high rate)
- Dynamic range and cross talk are primary issues

- Possible detectors:
- Anger cameras, SXD
- Scintillator, deep etched silicon detectors
- Cascade detectors
- Solid state detectors

Conclusion

- For most of the instruments at the SNS, improvements in detector performance are needed.
- Significant compromises will need to be made in the short term.
- Day one detector choices have been made for most of the instruments, but upgrades are needed.