Neutron Scattering Instruments at IPNS and SNS

R. Kent Crawford

Intense Pulsed Neutron Source (IPNS)
Argonne National Laboratory

Senior Team Leader for
Spallation Neutron Source (SNS)
Neutron Scattering Instruments

Overview of Talk

- IPNS
  - Instruments Overview
  - Detectors at IPNS
- SNS
  - Instruments Overview
  - Reference Instrument Set
  - Detector Requirements
  - R&D for Instruments
  - Schedule for SNS Instruments

IPNS FACILITY

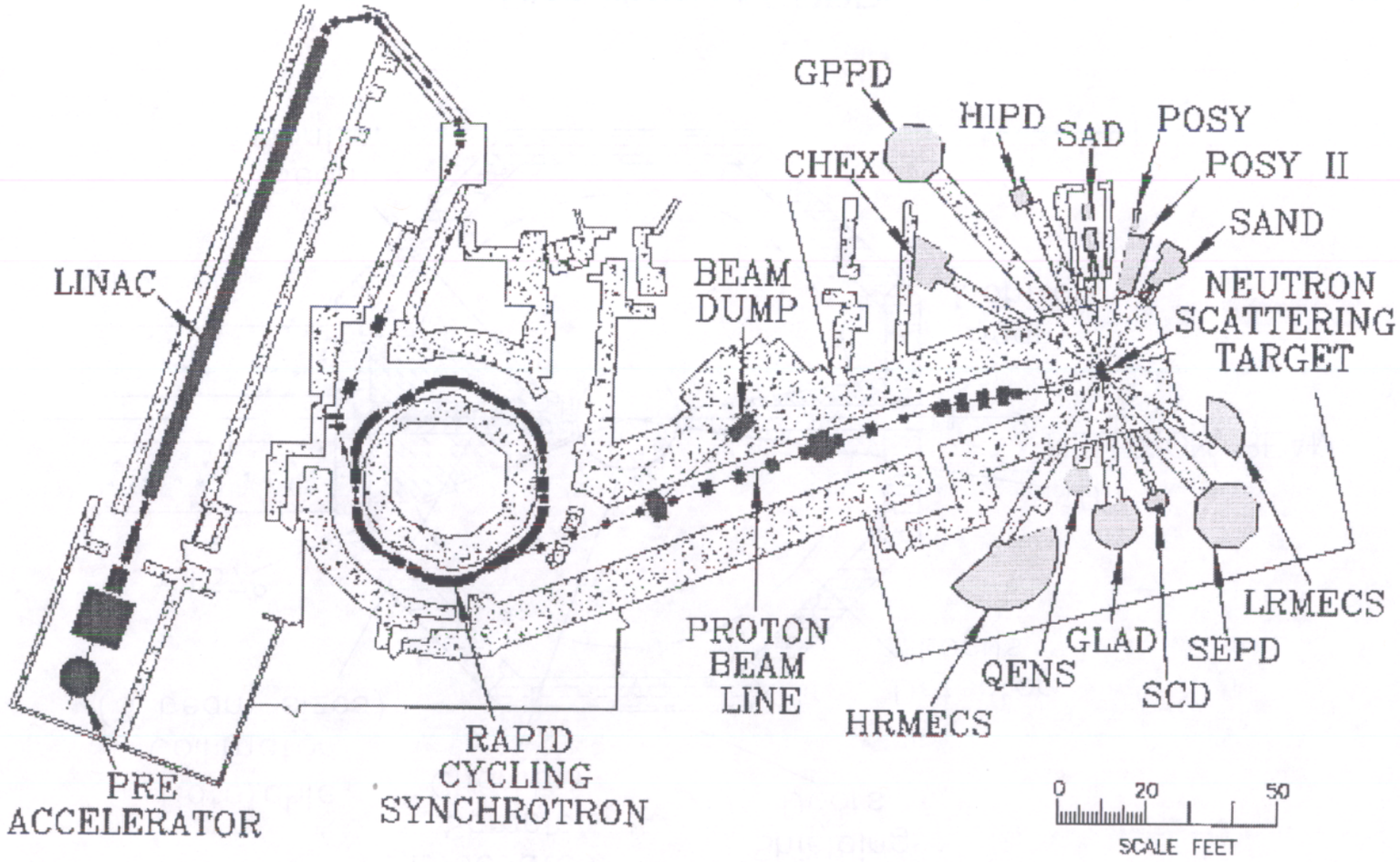

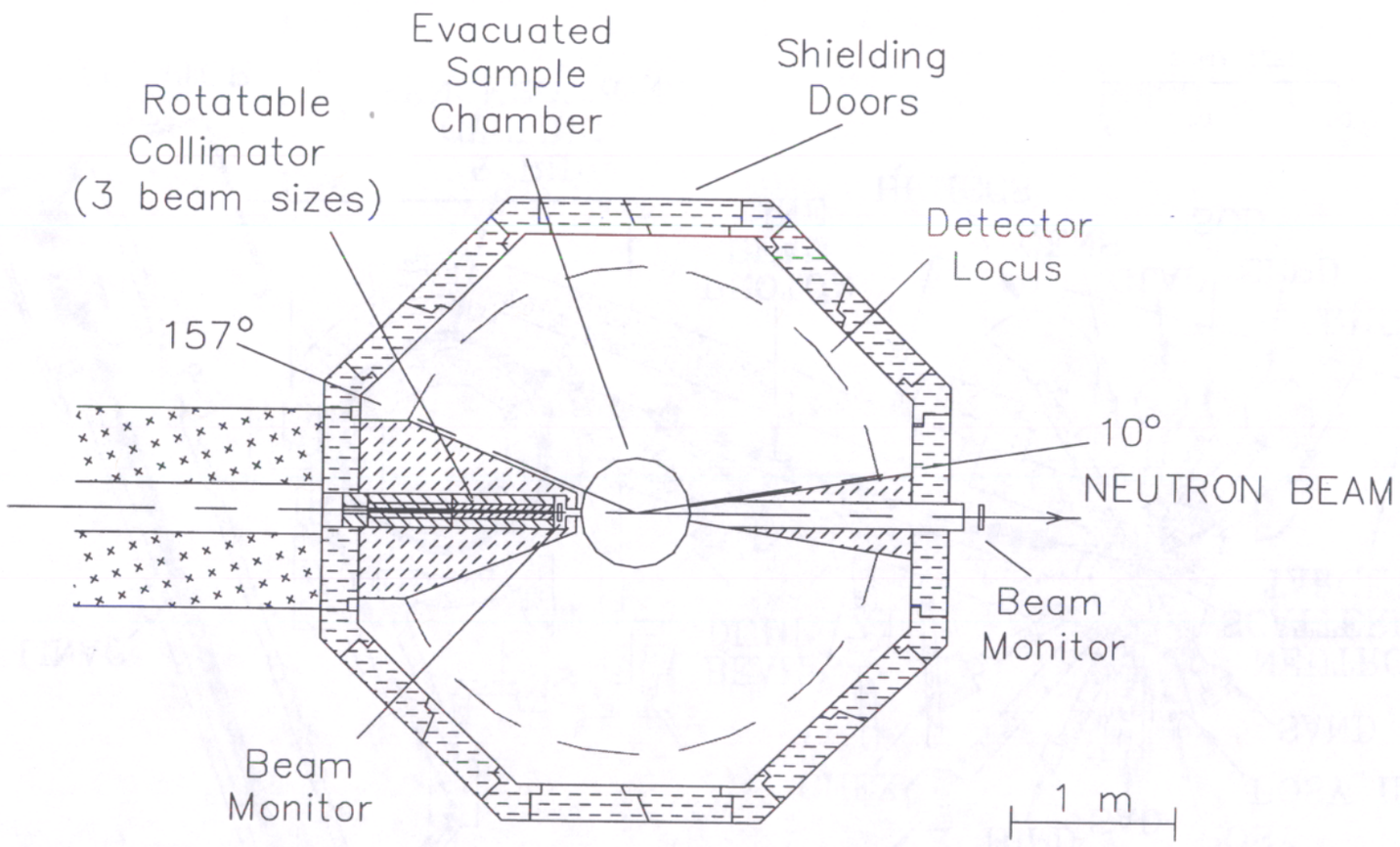

Plan View of GPPD

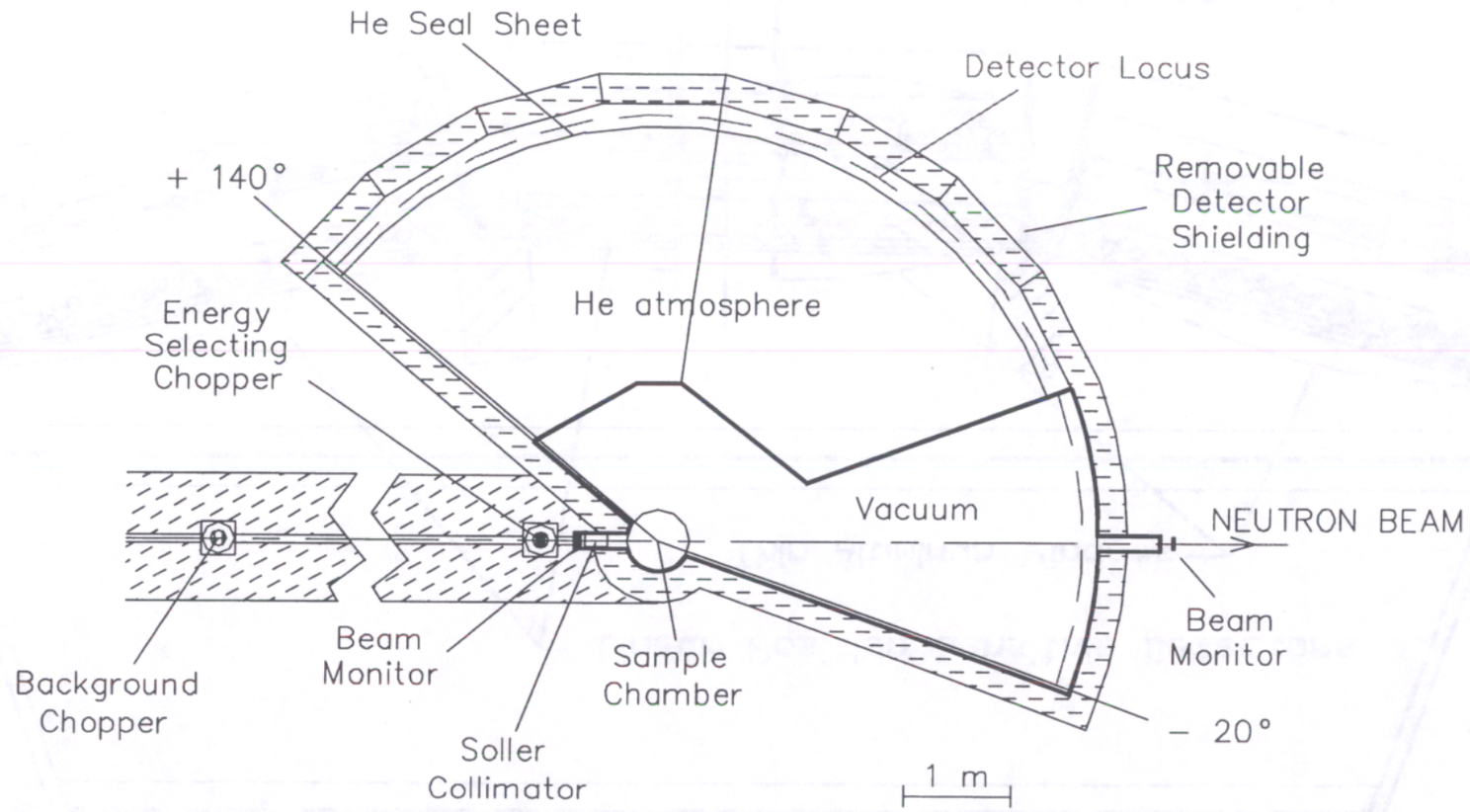

Plan View of Present HRMECS

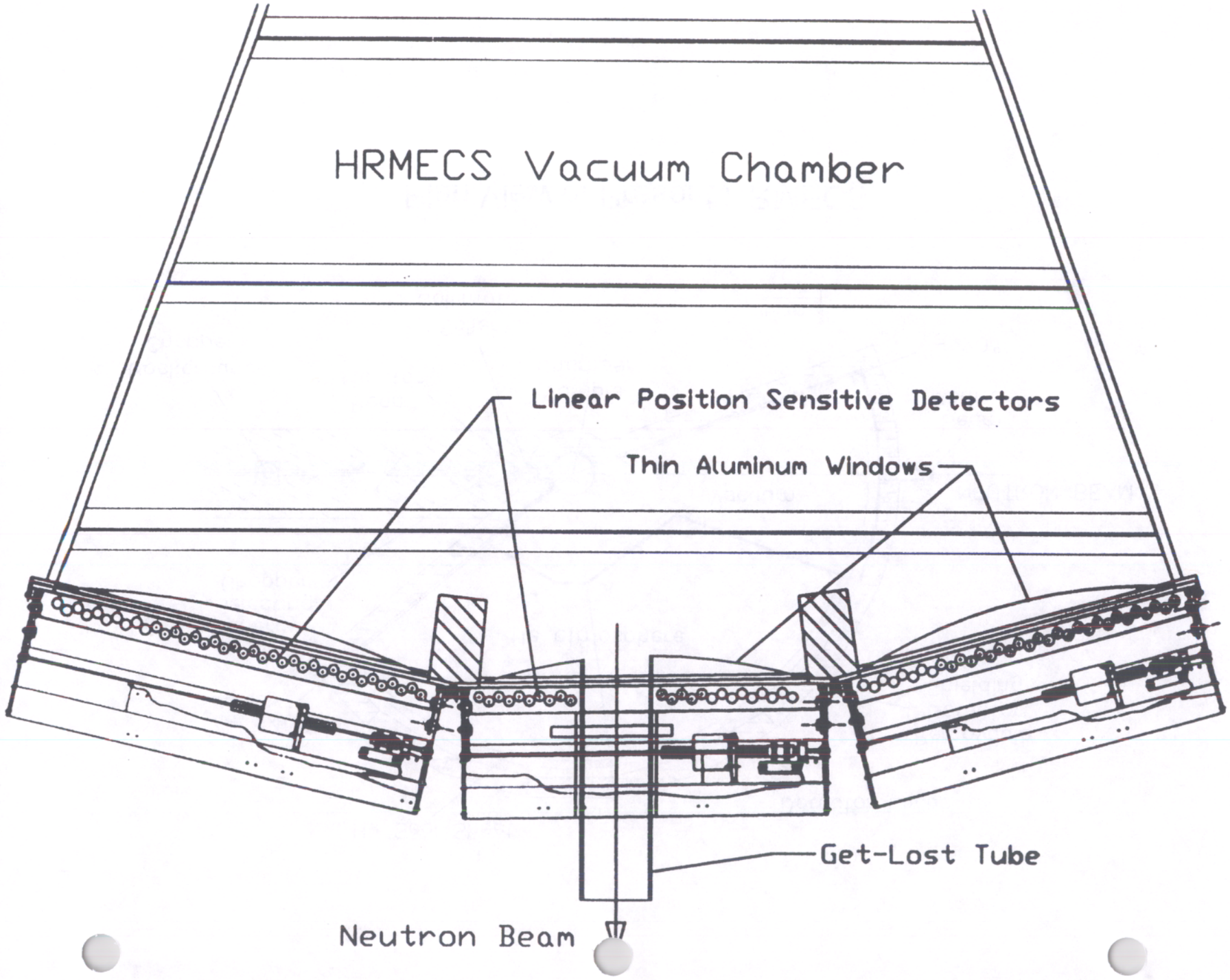
HRMECS Vacuum Chamber
Linear Position Sensitive Detectors
Thin Aluminum Windows
Get-Lost Tube
Neutron Beam

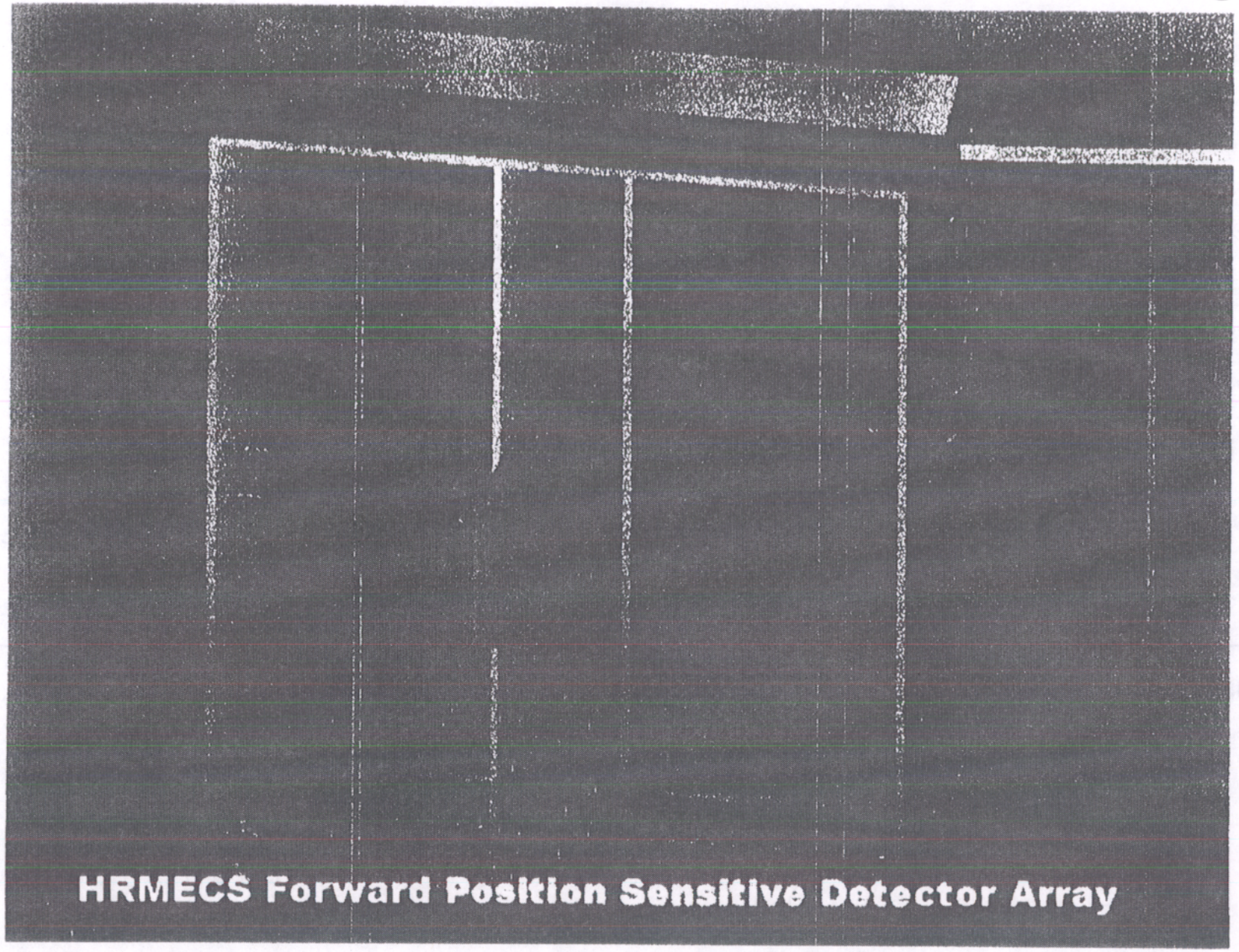

HRMECS Forward Position Sensitive Detector Array

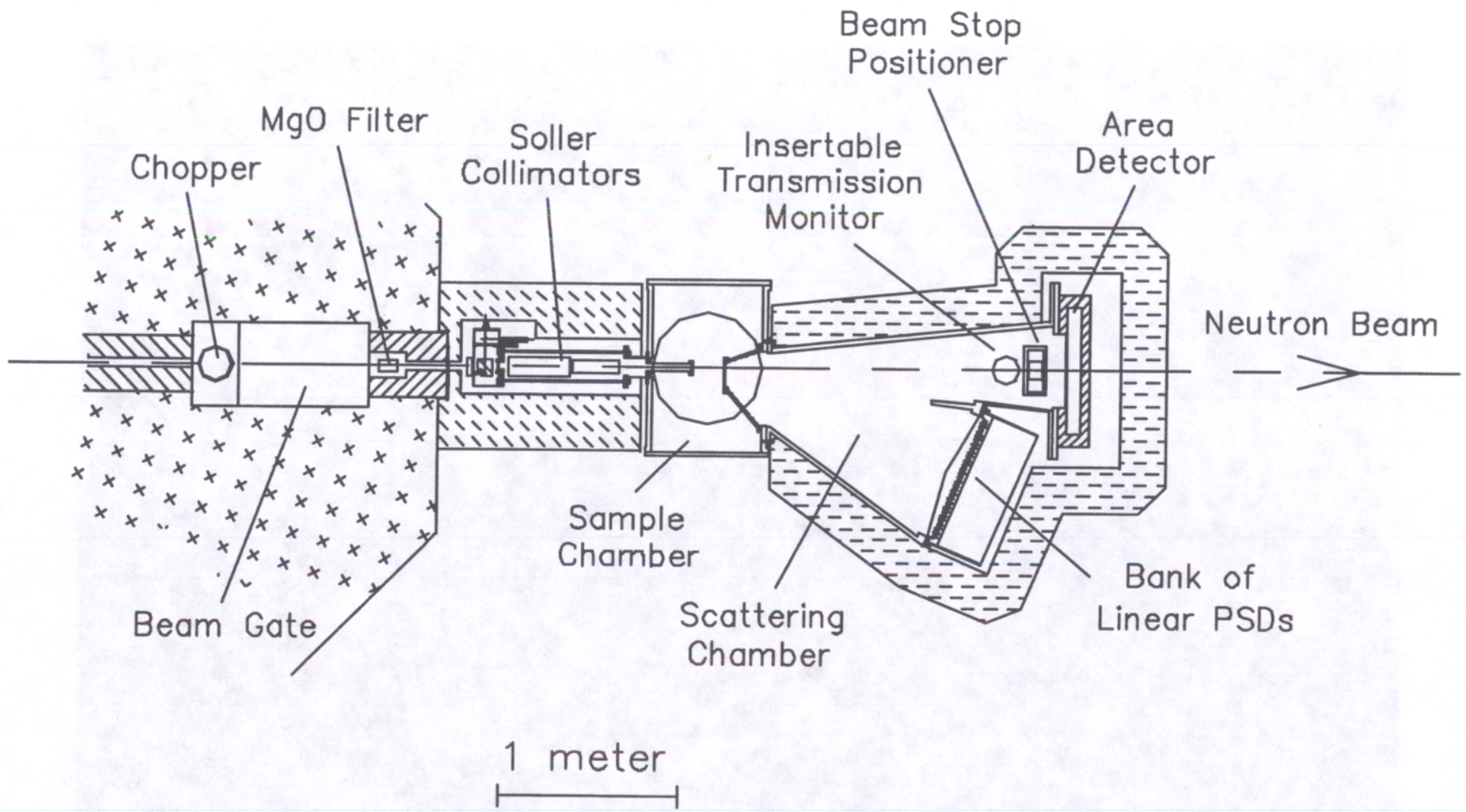

Plan View of SAND

Standard ^{3}He Proportional Counters at IPNS – 1998-1999

Instrument	Standard ^{3}He Detectors	Diameter (cm)	Active Length (cm)	^{3}He Fill Pressure (atm)
CHEX	22	1.27	38.1	10
GPPD	~320	1.27	38.1	10
HIPD	16	1.59	20.3	6
	21	1.27	38.1	10
HRMECS	~340	2.54	45.7	6
LRMECS	116	2.54	45.7	6
	40	2.54	22.9	6
	4	2.54	11.4	6
POSY1	1[a]	0.64	2.5	20
POSY2	1[a]	0.64	2.5	10
QENS	~140	0.64	12.5	10
SAD	1[a]	2.54	~5	0.3
SAND	1[a]	2.54	~5	0.3
SEPD	157	1.27	38.1	10

	~1180			

[a] Masked and used as beam monitors.

- Typical detector cost ~ $500 - $1,000 each

Pulsed Ionization Counters at IPNS – 1998-1999

- These are low-efficiency detectors used in transmission

  → ~16 BF_3 pulsed ion chambers used as beam monitors

  → 1 ^3He pulsed ion chamber used as a beam monitor

- Typical beam monitor cost ~ $5,000 - $10,000 each

SNS Responsibilities

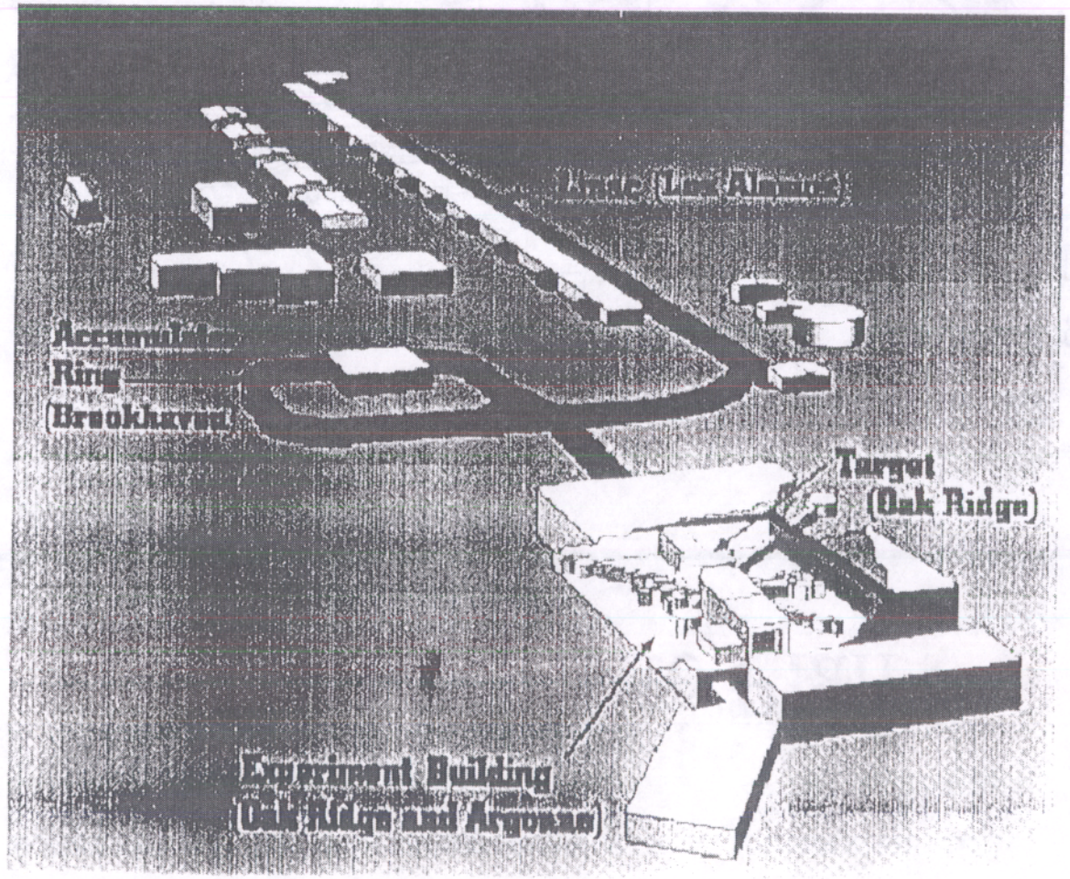

The SNS Site Plan

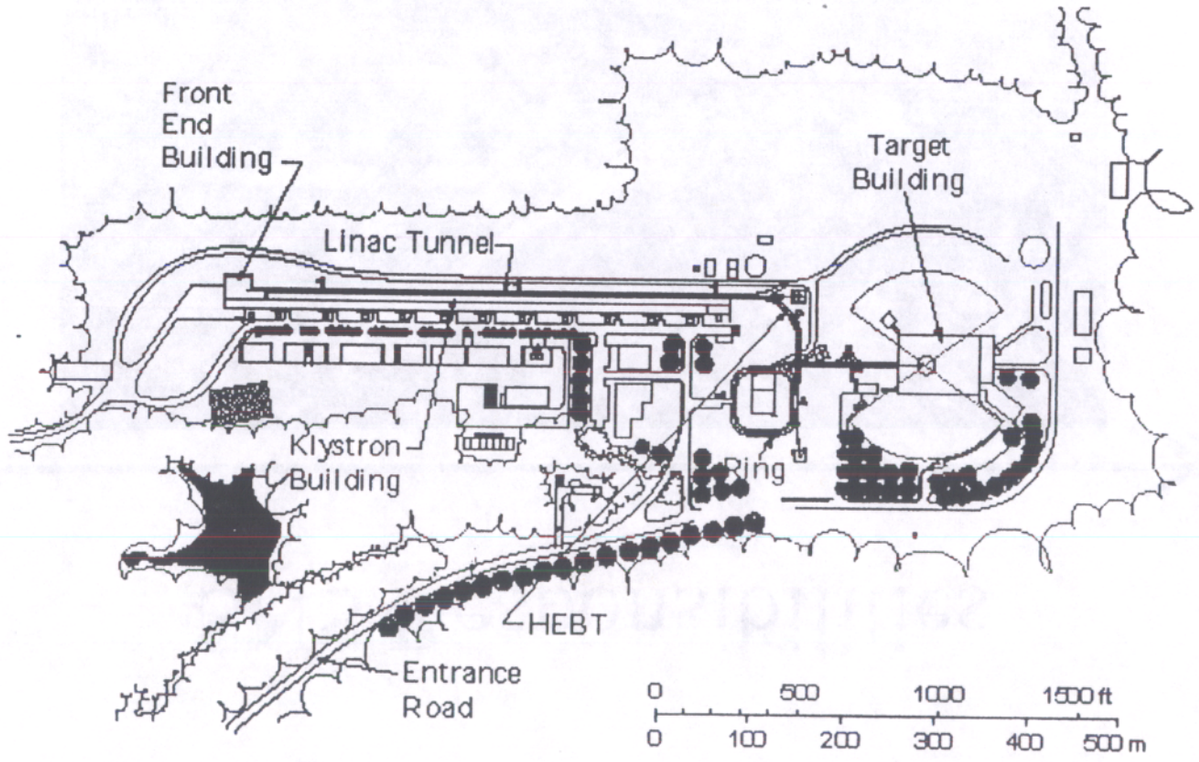

SNS Overview

- 1 MW accelerator, upgradeable to 4 MW
- Delivers 1 GeV protons at 60 Hz
- 1 target station, upgradeable to 2
- 18 neutron beam ports
- Total project cost $1.33 B
- 7-year construction project
- Planned construction start FY99

SNS Performance

Facility	Location	Year	Φ_{th}
ZING-P	ANL	1973	~8×10^{7}
ZING-P'	ANL	1977 - 1980	~7×10^{10}
WNR	LANL	1977 - 1985	~6×10^{10}
KENS	KEK	1980 -	7×10^{10}
IPNS	**ANL**	**1981 -**	**1.4×10^{11}**
LANSCE	LANL	1985 -	8.5×10^{11}
ISIS	RAL	1985 -	3.0×10^{12}
1-MW SNS	**ORNL**	**2005**	**~1-10$\times10^{13}$**
5-MW-ESS or SNS	?	?	~5-50$\times10^{13}$

SNS Status

- Conceptual Design Report published June, 1997
- DOE validation review June 1997
- $157 M in President's budget for FY99 construction line item

SNS Status (cont'd)

- Senate approved $157 M for FY99 construction line item
- House approved $100 M for FY99 construction line item
- FY99 construction line item funding appears certain

Neutron Scattering Instruments for the SNS

- The initial SNS construction project will provide funding for 10 neutron scattering instruments (not yet selected !)
- SNS instrument scientists are being hired to be responsible for these instruments
- Additional instruments will be added as rapidly as practical

Neutron Scattering Instruments - cont'd

- $59 M over 7 years to build 10 instruments
- $24 M over 6 years for instrument R&D
- R&D should provide infrastructure for future instrument construction as well
- Want strong and broad involvement of the user community

The SNS Reference Instrument Set

- The first 10 instruments to be built have not yet been selected !!

- A reference set of 10 instruments, based on input from a user workshop, has been defined for planning purposes (e.g., interface definition, space allocation)

SNS Experiment Hall and Reference Instruments

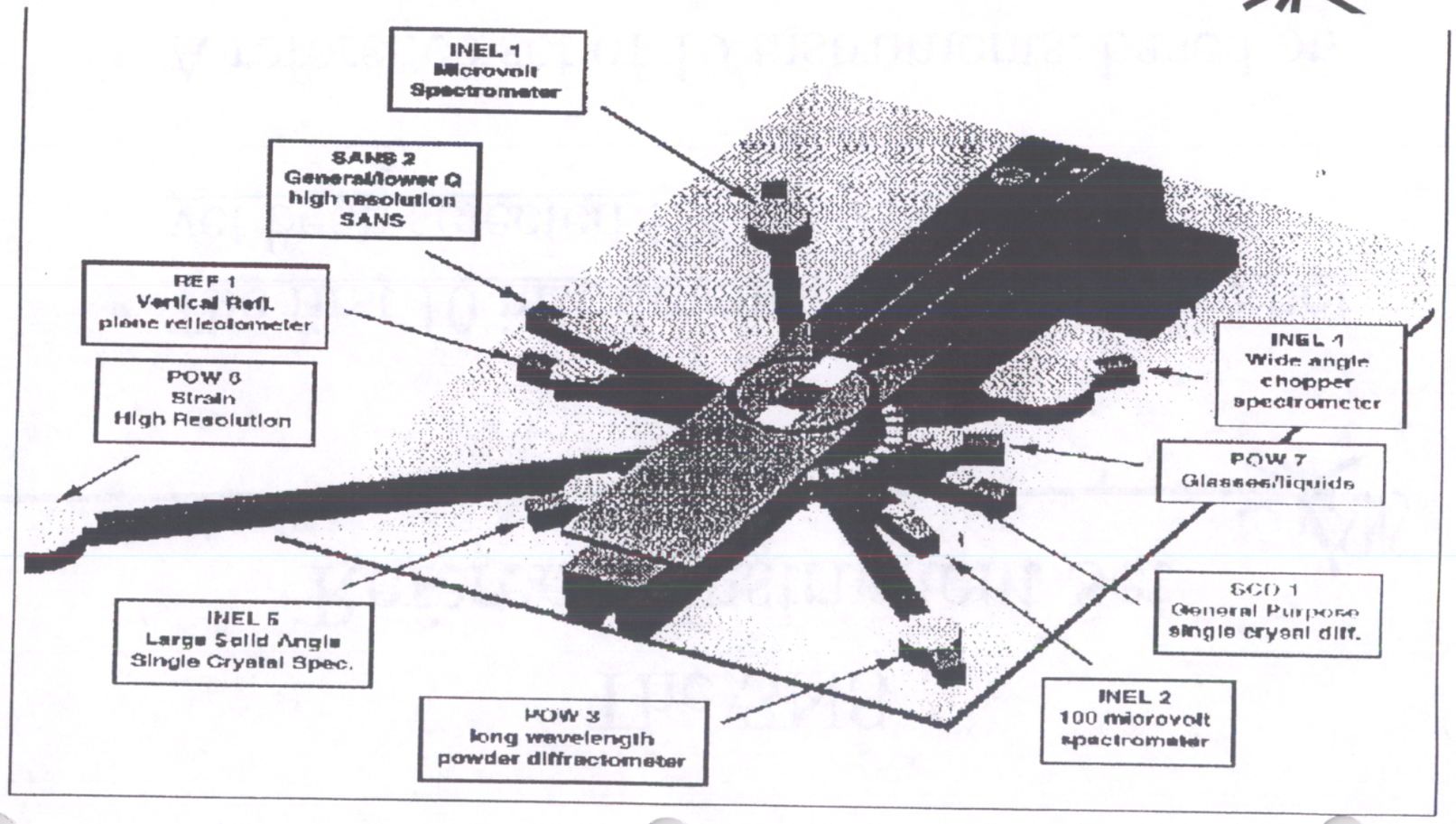

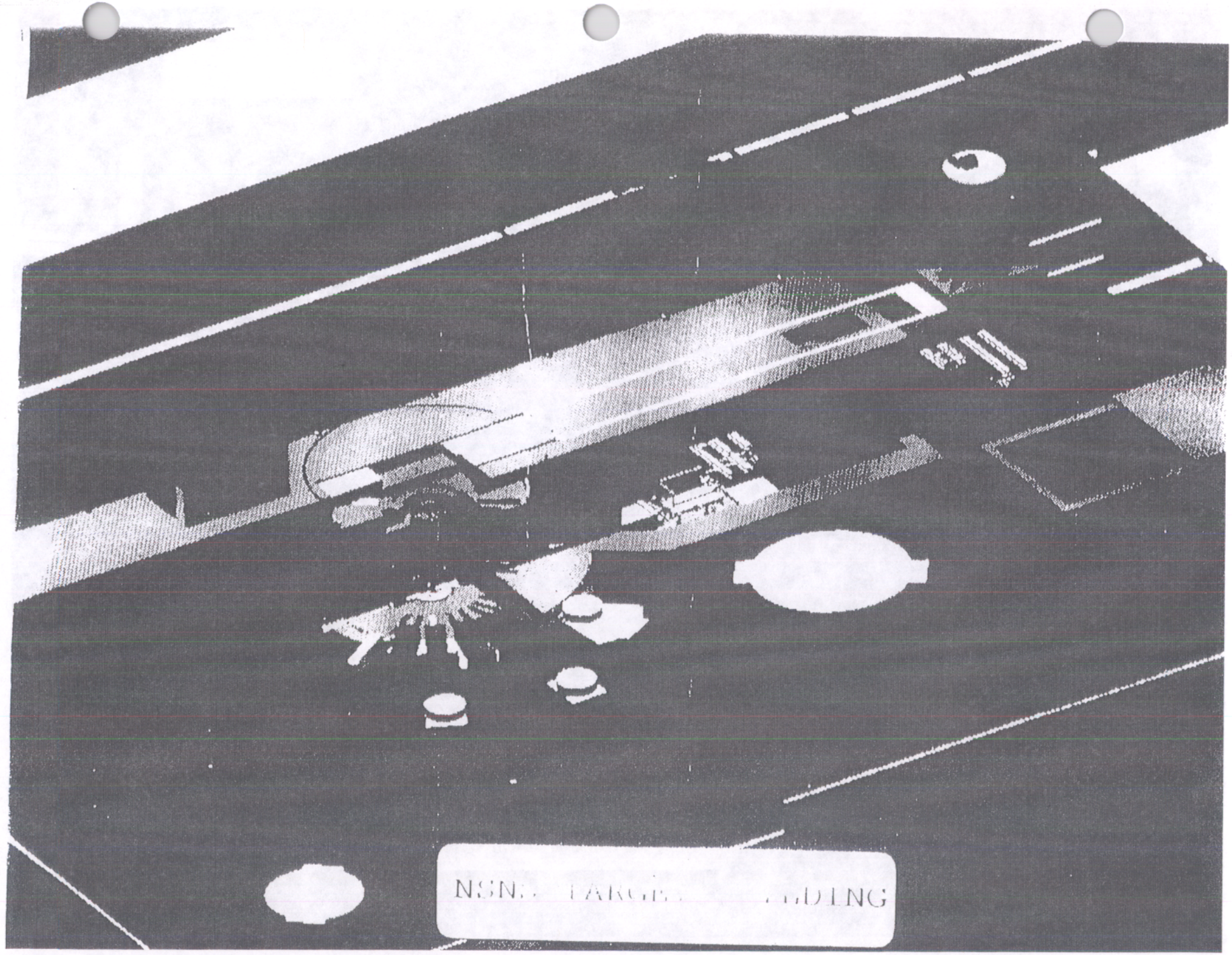
NSN

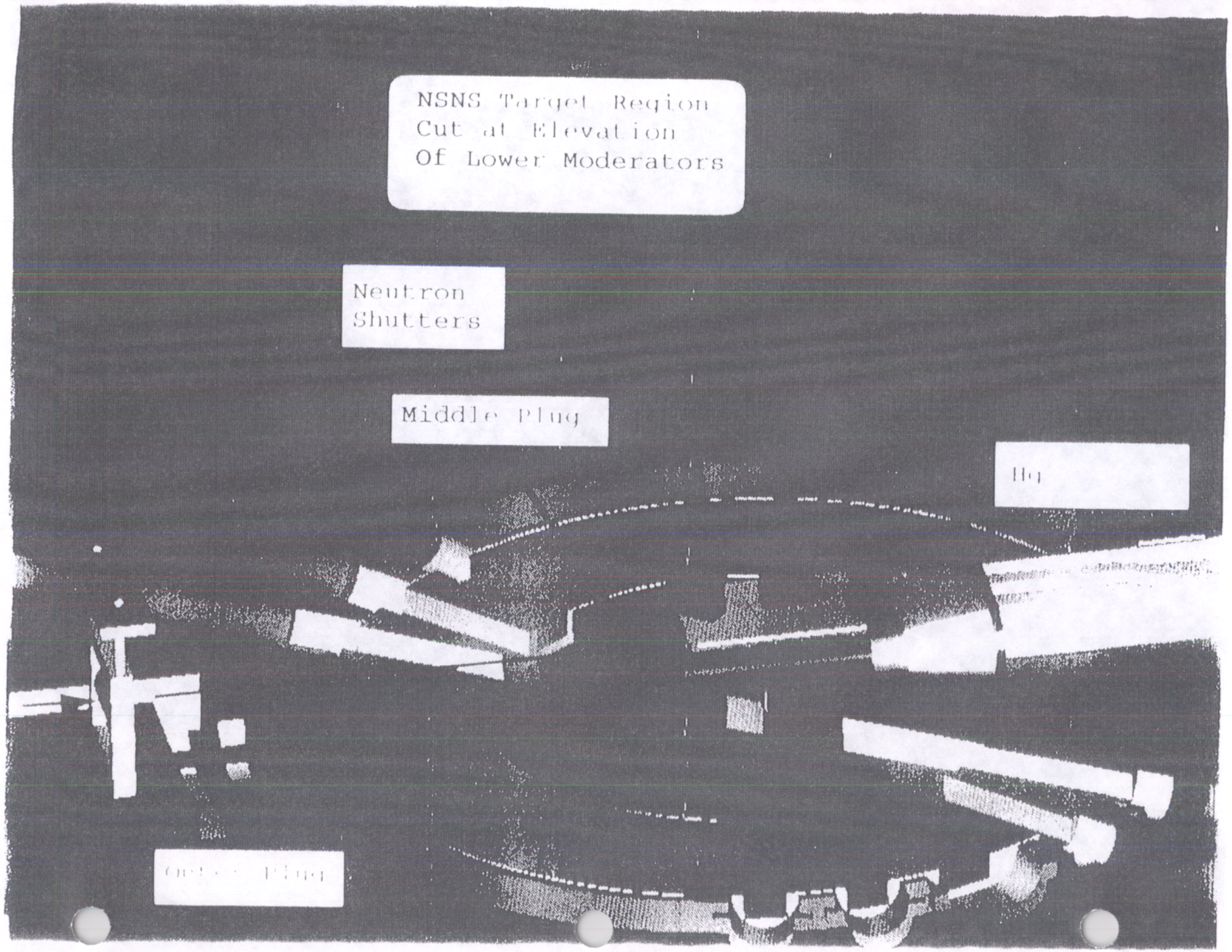
NSNS Target Region
Cut at Elevation
Of Lower Moderators
Neutron
Shutters
Middle Plug
Hg

SNS Reference Instrument Set

POW3	**General purpose powder diffractometer**	**$\Delta d/d = 0.0013$**
POW6	High-resolution engineering diffractometer	$\Delta d/d = 0.0007$
POW7	Glasses/liquids diffractometer	$\Delta Q/Q = 0.007\text{-}0.1$
SCD1	Single-crystal diffractometer	$\Delta d/d = 0.005$
SANS2	Small-angle diffractometer	$Q_{min} = 0.001$ Å
REF1	Horizontal surface reflectometer	$\Delta\theta/\theta = 0.02\text{-}0.1$
INEL1	High-resolution backscattering spectrometer	$\Delta E = 5$ μeV
INEL2	**Quasielastic spectrometer**	**$\Delta E = 70$ μeV**
INEL4	General purpose chopper spectrometer	$\Delta E/E = 0.01$
INEL5	Single-crystal chopper spectrometer	$\Delta E/E = 0.01$

The Reference Powder Diffractometer
POW3

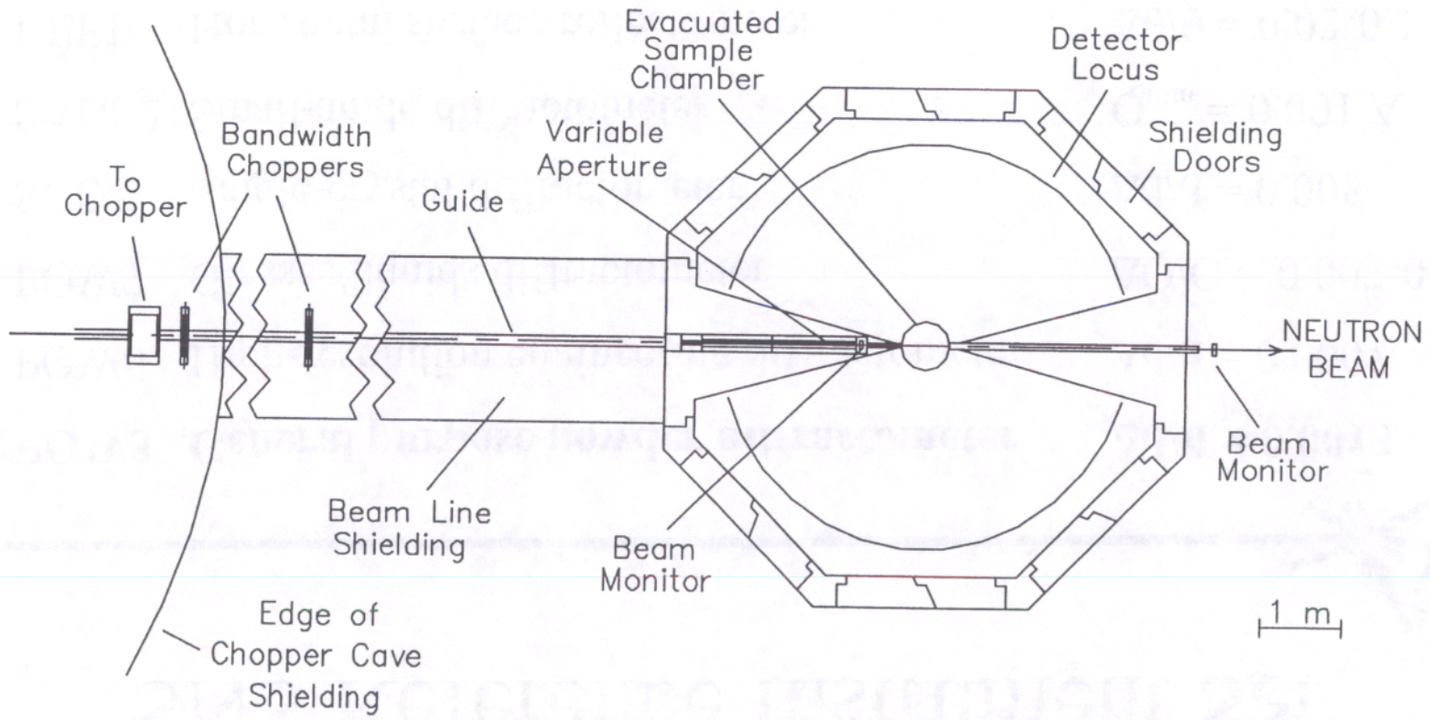

POW3 Parameters

- Moderator-sample dist 30 m
- Sample-detector dist 2.5 m
- Detectors ^{3}He
  - 500 Standard 380 mm x 12 mm dia
  - 300 Linear PSD 380 mm x 12 mm dia
- Sample 50 mm x 10 mm dia

POW3 Performance

- Instantaneous data rate
  - **~80,000 counts/sec/detector**
  - **~1,600 counts/sec/cm^2**
- Detector area **3.6 m^2 (~6,000 pixels)**
- Time-average data rate **~300,000 counts/sec**
- Measurement time
  - **Refineable data set in 1-3 minutes**
    for strong scattering sample

The Reference Medium-Resolution Quasielastic Spectrometer INEL2

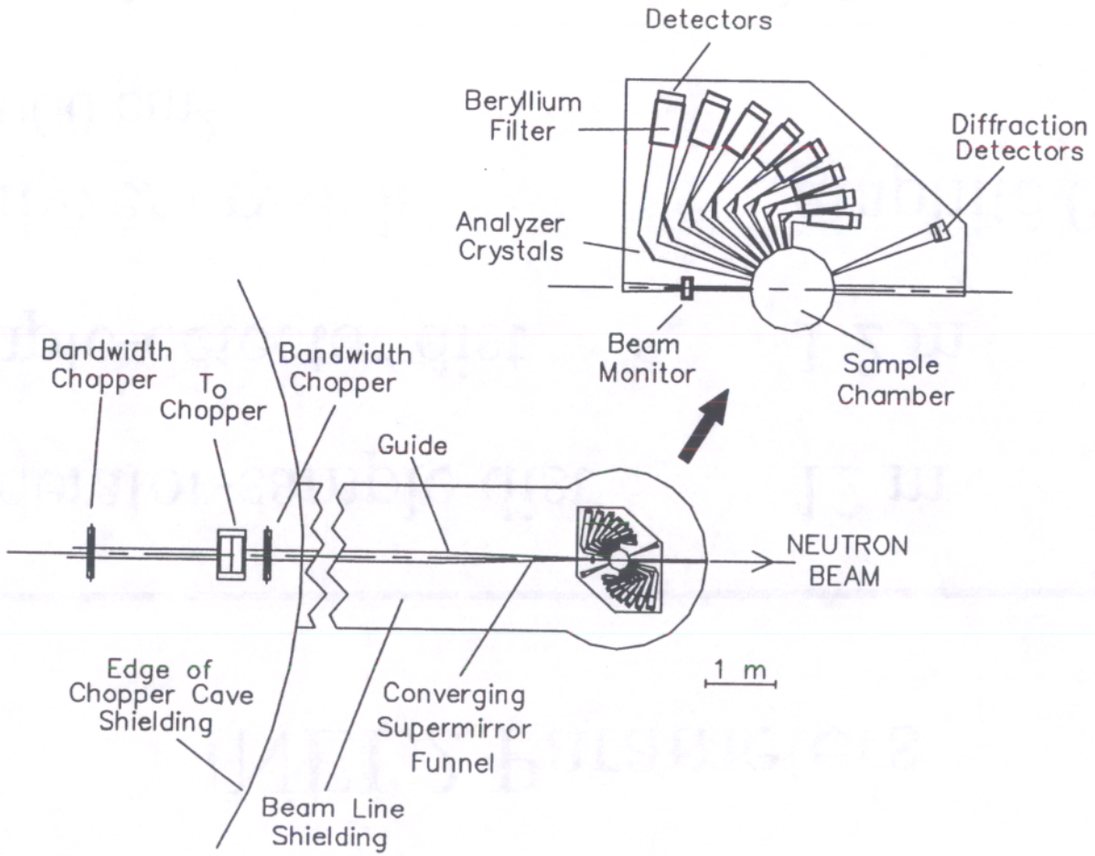

INEL2 Parameters

- Moderator-sample dist — 12 m
- Sample-detector dist — 1.2 m
- Analyzer crystals — graphite 002
  - 8000 cm^2
- Detectors — ^3He
  - 80 Standard — 50 mm x 6 mm dia
- Sample — 50 mm x 6 mm dia

INEL2 Performance

- Instantaneous data rate
  - **~400,000 counts/sec/detector**
  - **~50,000 counts/sec/cm^2**
- Detector area **0.06 m^2**
- Time-average data rate **~40,000 counts/sec**
- Measurement time
  - **Quasielastic scattering data set in 1-3 minutes** for strong scattering sample

The Reference Glass Diffractometer POW7

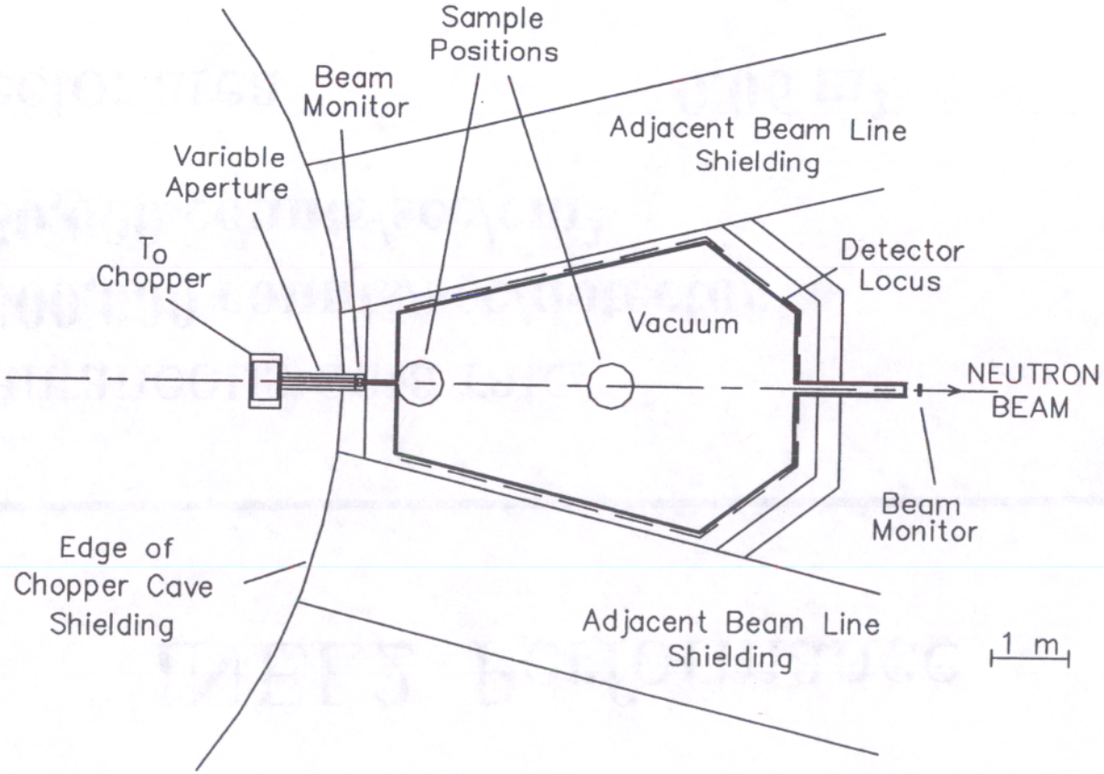

POW7 Parameters

- Moderator-sample dist 9 m
- Sample-detector dist 1-5 m
- Detectors ^{3}He
  - 700 Linear PSD 600 mm x 12 mm dia
- Sample 20 mm x 20 mm

Exciting New Science

- Real-time measurements
  - Complete spectra in < 1 minute
- High resolution measurements
  - Atomic spacing to 0.03%
  - Structures up to 10,000 Å
- Measurements with small samples
  - < 1 mg in some cases

R&D

Research and development activities for the SNS neutron scattering instruments are intended to

- support the construction of the first 10 instruments
- establish an infrastructure for the design and construction of future SNS instruments.

R&D Activities

- Instrument concepts
- Instrument simulation software
- Data acquisition
- **Neutron detectors**
- Neutron choppers and chopper control
- Sample environment equipment
- Neutron optical components
- Software for data analysis and visualization

Detector Advisory Committee

- Hiring of SNS detector team leader
- Identification and evaluation of current detector technologies
- Allocation of R&D funds for neutron detector development
- Selection of detector technologies for instruments

Detector Advisory Committee Members

- Steve Naday ANL Chair

- Veljko Radeka BNL
- Jon Kapustinsky LANL
- Jacques Millaud LBNL
- Michael Kreisler LLNL
- Don Hutchinson ORNL
- Nobuo Niimura JAERI
- Carel van Eijk Delft
- Jim Schelten Juelich
- Peter Geltenbort ILL
- Nigel Rhodes RAL

Instrumentation Schedule

- The Instrument Oversight Committee is being formed now.
- A user meeting will be held November 9-11, 1998. (http://www.ornl.gov/jins/)
- Instrument Advisory Teams will be formed at the user meeting, but members can be added to these teams later as well.

SNS Neutron Instrumentation Workshop and Oak Ridge Neutron Users Meeting

November 9-11, 1998

Hyatt Regency Knoxville

Knoxville, TN

The purpose of the Instrumentation Workshop is to discuss scientific community needs for instrumentation at the Spallation Neutron Source (SNS). Topics to be covered include:

- Update on the current status and expected performance of the Spallation Neutron source.
- Priorities for the initial suite of 10 instruments to be built at the high power target station as part of the SNS reference design.
- The science case for a second target/instrument suite optimized for long wavelength neutrons.

In addition, the first meeting of Oak Ridge Neutron Users will be held. This will include current and potential users of both the SNS and the High Flux Isotope Reactor (HFIR). Topics to be covered include:

- Approval of By-Laws for the Users Group
- Discussion of user policies and concerns for SNS and HFIR
- Presentations describing upgrades to the neutron scattering facilities at HFIR currently underway

Anyone with an interest in the use of neutron scattering to study the structure and dynamics of materials is encouraged to attend. There may be limited funds available to help defray the costs of attending the workshop for participants who could not otherwise attend.

Sponsored by the US Department of Energy and the National Science Foundation.

Instrumentation Schedule - cont'd

- Construction project start October, 1998
- All 10 instruments selected by October, 2000
- Instrument construction and installation at Oak Ridge complete by October, 2005
- Facility operation and instrument commissioning will begin in October, 2005

Summary

- The SNS will provide exciting new opportunities in neutron scattering instrumentation and science.
- R&D programs should lead to new capabilities for future instruments.
- We welcome your involvement!