NEXT ASS'Y: | FINAL ASS'Y:

NOTES

1. INTERPRET DRAWING PER GLOBAL ENGINEERING DOCUMENTS DRAWING REQUIREMENTS MANUAL.
2. INTERPRET DIMENSIONS AND TOLERANCES PER ASME Y14.5M.
3. DIMENSIONS ARE IN INCHES.
4. RIGHT SIDE BALL GUIDE SHALL BE THROUGH HARDENED TO RC 38 TO 42.
5. RIGHT SIDE BALL GUIDE SHALL BE NICKEL PLATED 0.0003 TO 0.0008 THICK.

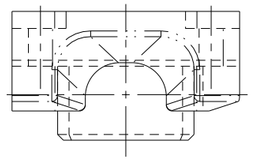

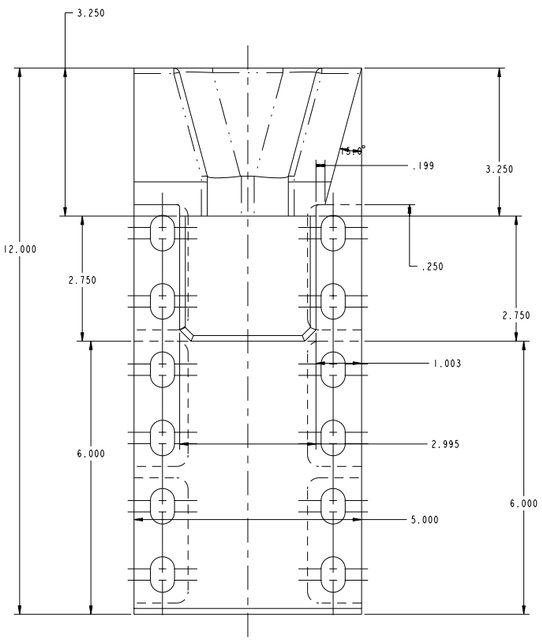

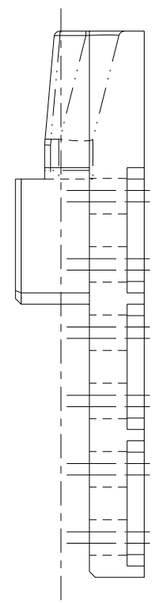

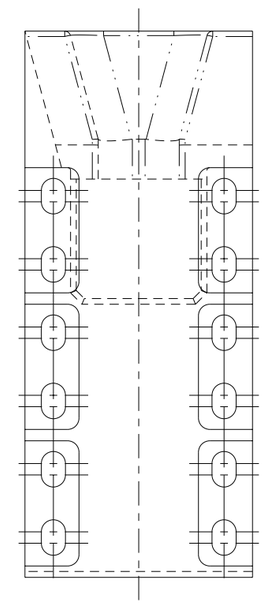

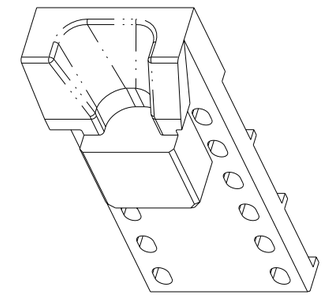

SCALE 0.750

4 5	1	107030600M8E8700A132-1	RIGHT SIDE BALL GUIDE	STAINLESS STEEL	316L	1
00000000000M 8E8700A000	CAGE CODE	PART OR IDENTIFYING NO	NOMENCLATURE OR DESCRIPTION	MATERIAL	SPECIFICATION	FIND NO
	1	NEXT ASSEMBLY	PARTS LIST			

QUALITY VERIFICATION

MECHANICAL AND STRUCTURAL
REFERENCE SNS-TS-G002

QV CLAUSE	DOCUMENTS REQUIRED	APPLICABLE TO PART NO *
303	MATERIAL MILL TEST REPORT	-
325	MATERIAL SELLER CERT	-
326	SPECIAL MATERIAL INSPECTION REPORT	-
205	MANUFACTURING INSPECTION AND TEST PLAN	-
312	FIELD INSPECTION AND TEST PLAN	-
321	WELD AND BRAZE INSPECTION REPORT	-
322	HEAT TREAT REPORT (WRAPAT)	-
310	LEAK TEST REPORT	-
315	CLEANING CERT	-
318	DEVIATION REQUEST	-
319	NONCONFORMANCE PROCESS	-
323	DIMENSIONAL REPORT	-
330	FUNCTIONAL TEST REPORT	-
100	DOCUMENTATION	-

* SYMBOL X INDICATES APPLICABLE TO ALL PARTS OR ITEMS

QA REP ..... DATE .....

RPE

REV. XX DATE XX/XX/XX

107030600M8E8700A132

PRELIMINARY

NO REPRESENTATION OR WARRANTY,EXPRESSED OR IMPLIED,IS MADE AS TO THE ACCURACY, COMPLETENESS OR USEFULNESS OF THE INFORMATION OR STATEMENTS CONTAINED IN THESE DRAWINGS, OR THAT THE USE OR DISCLOSURE OF ANY INFORMATION, APPARATUS, METHOD OR PROCESS DISCLOSED IN THESE DRAWINGS MAY NOT INFRINGE PRIVATE RIGHTS OF OTHERS. NO LIABILITY IS ASSUMED WITH RESPECT TO THE USE OF, OR FOR DAMAGES RESULTING FROM THE USE OF, ANY INFORMATION, APPARATUS, METHOD OR PROCESS DISCLOSED IN THESE DRAWINGS. DRAWINGS MADE AVAILABLE FOR INFORMATION TO BIDDER ARE NOT TO BE USED FOR OTHER PURPOSES, AND ARE TO BE RETURNED UPON REQUEST OF THE FORWARDING CONTRACTOR.

P THIS DRAWING PRODUCED ON PRO-ENGINEER

THIS DOCUMENT CONTROLLED BY
CHANGE CONTROL SYSTEM..... 3 .....
SNS PROCEDURE SNS-TS-G001

REV	CHANGE TYPE	CHANGE STATUS	APPROVAL STATUS	DESCRIPTION	BY	CHK	SECT	DEPT	DATE	PE	REQ	DOE	PJ
00A	—	3	—	ISSUE FOR COMMENT AND INFORMATION	SMR				11/01				

REVISION OR ISSUE PURPOSE — REVISION APPROVALS

SCALE AS NOTED	DES DMW/MEP	11/01
TOLERANCES UNLESS OTHERWISE SPECIFIED	DRW M.E.PHILLIPS	11/01
FRACTIONS ±	CHK :	:
XX DECIMALS ±.01	L3 :	:
XXX DECIMALS ±.005	L2 :	:
ANGLES ±0°15'	T.E. FORNEK	11/01
BREAK SHARP EDGES .06 MAX	:	:
FINISH ±25 RMS UNLESS OTHERWISE SPECIFIED	:	:
	:	:
	:	:
	:	:
	DRAWING APPROVALS	DATE

ornl Oak Ridge National Laboratory
operated for the DEPARTMENT OF ENERGY under U.S. GOVERNMENT contract DE-AC05-00OR22725
Oak Ridge, Tennessee

SNS Spallation Neutron Source

SPALLATION NEUTRON SOURCE PROJECT
SINGLE & MULTI CORE VESSEL INSERT
RIGHT SIDE BALL GUIDE

BLDG	FL	SHT	OF	CLASS
8700	1ST	1	1	U

107030600M8E8700A132 — REV 00A