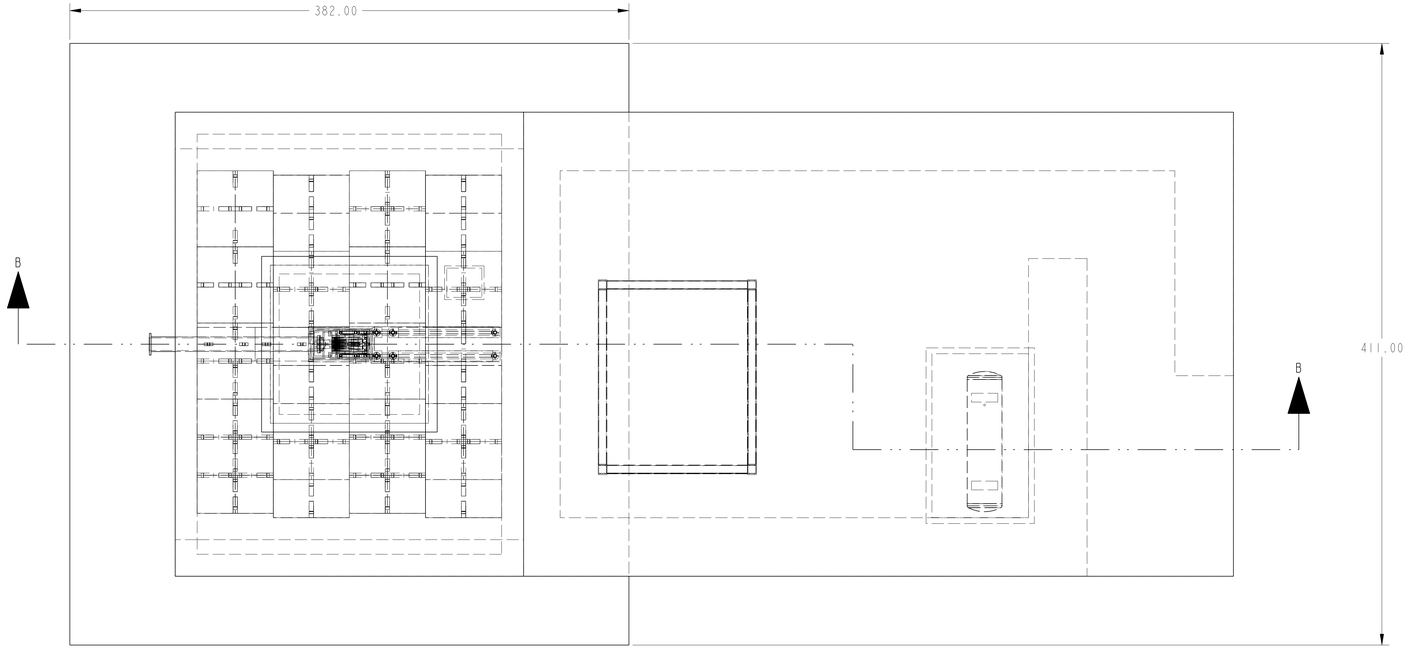

NOTES

1. INTERPRET DRAWING PER MECHANICAL ENGINEERING DRAFTING STANDARD ES-3.1-2.
2. INTERPRET DIMENSIONS AND TOLERANCES PER ANSI Y14.5M.
3. DIMENSIONS ARE IN INCHES.

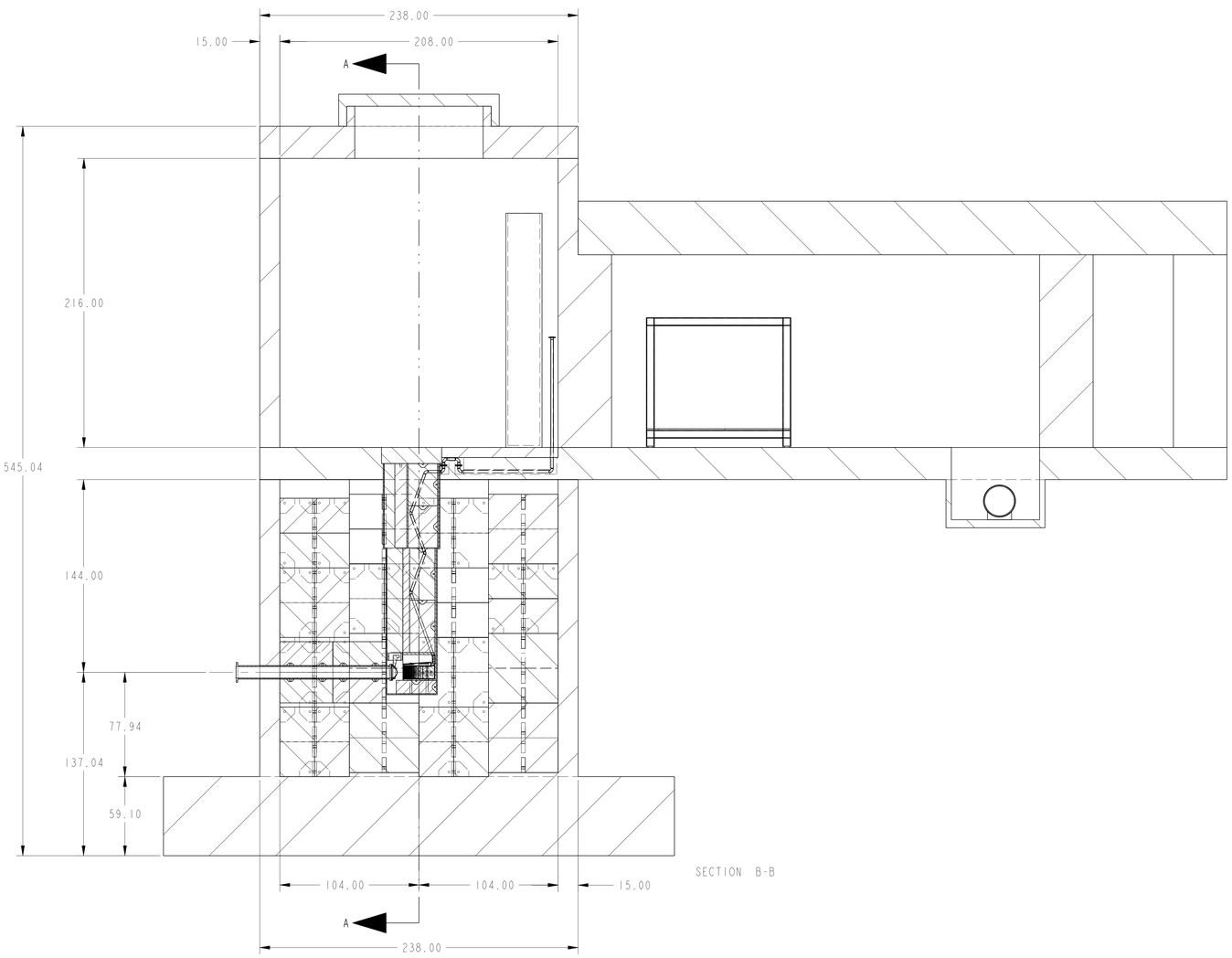

SECTION B-B

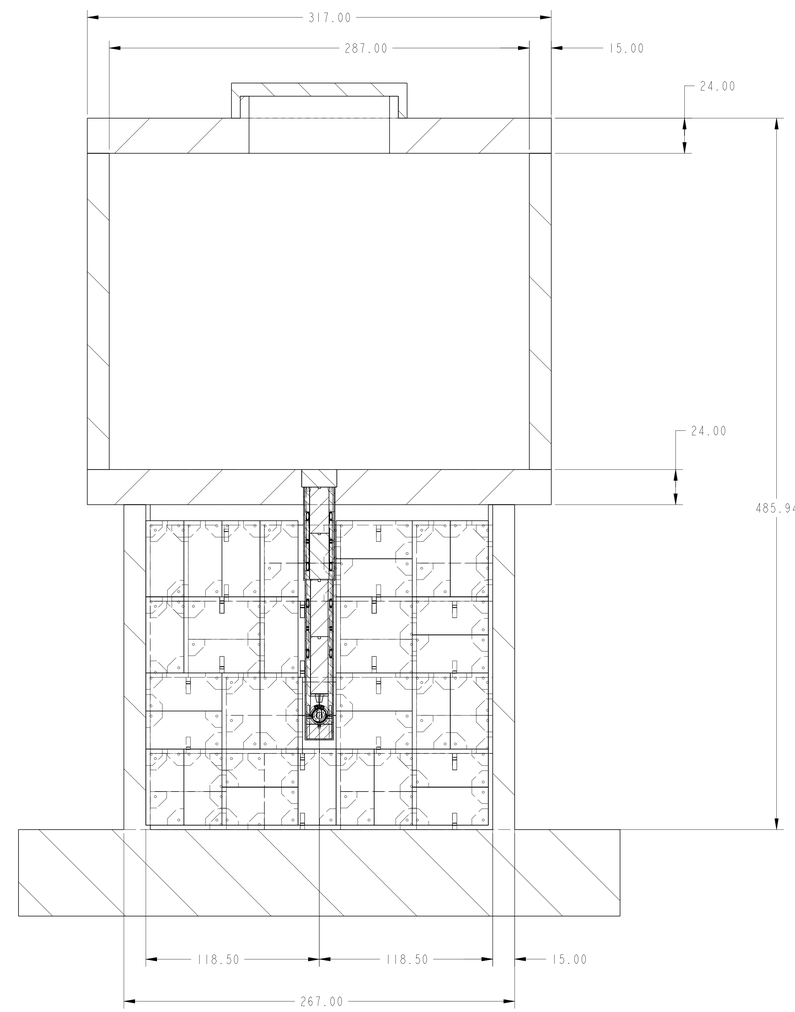

NO REPRESENTATION OR WARRANTY, EXPRESSED OR IMPLIED, IS MADE AS TO THE ACCURACY, COMPLETENESS OR USEFULNESS OF THE INFORMATION OR STATEMENTS CONTAINED IN THESE DRAWINGS, OR THAT THE USE OR DISCLOSURE OF ANY INFORMATION, APPARATUS, METHOD OR PROCESS DISCLOSED IN THESE DRAWINGS MAY NOT INFRINGE PRIVATE RIGHTS OF OTHERS. NO LIABILITY IS ASSUMED WITH RESPECT TO THE USE OF, OR FOR DAMAGES RESULTING FROM THE USE OF, ANY INFORMATION, APPARATUS, METHOD OR PROCESS DISCLOSED IN THESE DRAWINGS. DRAWINGS MADE AVAILABLE FOR INFORMATION TO BIDDER ARE NOT TO BE USED FOR OTHER PURPOSES, AND ARE TO BE RETURNED UPON REQUEST OF THE FORWARDING CONTRACTOR.

P THIS DRAWING PRODUCED ON PRO-ENGINEER

THIS DOCUMENT CONTROLLED BY
CHANGE CONTROL SYSTEM 3
ENGINEERING PROCEDURE EP-C-18

REV	CHANGE TYPE	CHANGE CONTROL SYSTEM	CHANGE REQUEST NUMBER	DESCRIPTION	A-E	BY	CHK	SECT	DEPT	DATE	PE	REQ	DATE	LM-ES	DATE	DOE	DATE	QA	CV	EC	EE	EM	IE	M	PD	SE	ST	XAD	PES
				REVISION OR ISSUE PURPOSE					REVISION APPROVALS									SQUAD CHECK											

SCALE .25 SECTION A

TOLERANCES UNLESS OTHERWISE SPECIFIED
FRACTIONS :
XX DECIMALS ±.01
XXX DECIMALS ±.005
ANGLES ±0°15'
BREAK SHARP EDGES .06 MAX
FINISH 125 UNLESS OTHERWISE SPECIFIED

DRAWING APPROVALS		DATE
DES	A.SMIRNOV	:
DRW	A.SMIRNOV	:
CHK	:	:
SECT	:	:
DEPT	:	:
PE	:	:
CR	:	:
PJ	:	:
REQ	:	:
	:	:
	:	:
	:	:

LOCKHEED MARTIN LOCKHEED MARTIN ENERGY SYSTEMS, INC.
operated for the DEPARTMENT OF ENERGY under U.S. GOVERNMENT contract DE-AC-05-84OR21400
Oak Ridge, Tennessee • Paducah, Kentucky

PROJECT NAME
SNS TARGET SYSTEM

BEAM DUMP ASSEMBLIES
RING INJECTION DUMP
GENERAL ASSEMBLY

1	48	49	50	PLANT	BLDG	FL	SHT	OF	TYPE	CLASS
3	M	E	U	:	:	:	1	5	:	:

51	52	53	
:	:	:	M3E087000K001

REV 0

M3E087000K001

NEXT ASS'Y:

FINAL ASS'Y:

NOTES

1. INTERPRET DRAWING PER MECHANICAL ENGINEERING DRAFTING STANDARD ES-3.1-2.
2. INTERPRET DIMENSIONS AND TOLERANCES PER ANSI Y14.5M.
3. DIMENSIONS ARE IN INCHES.

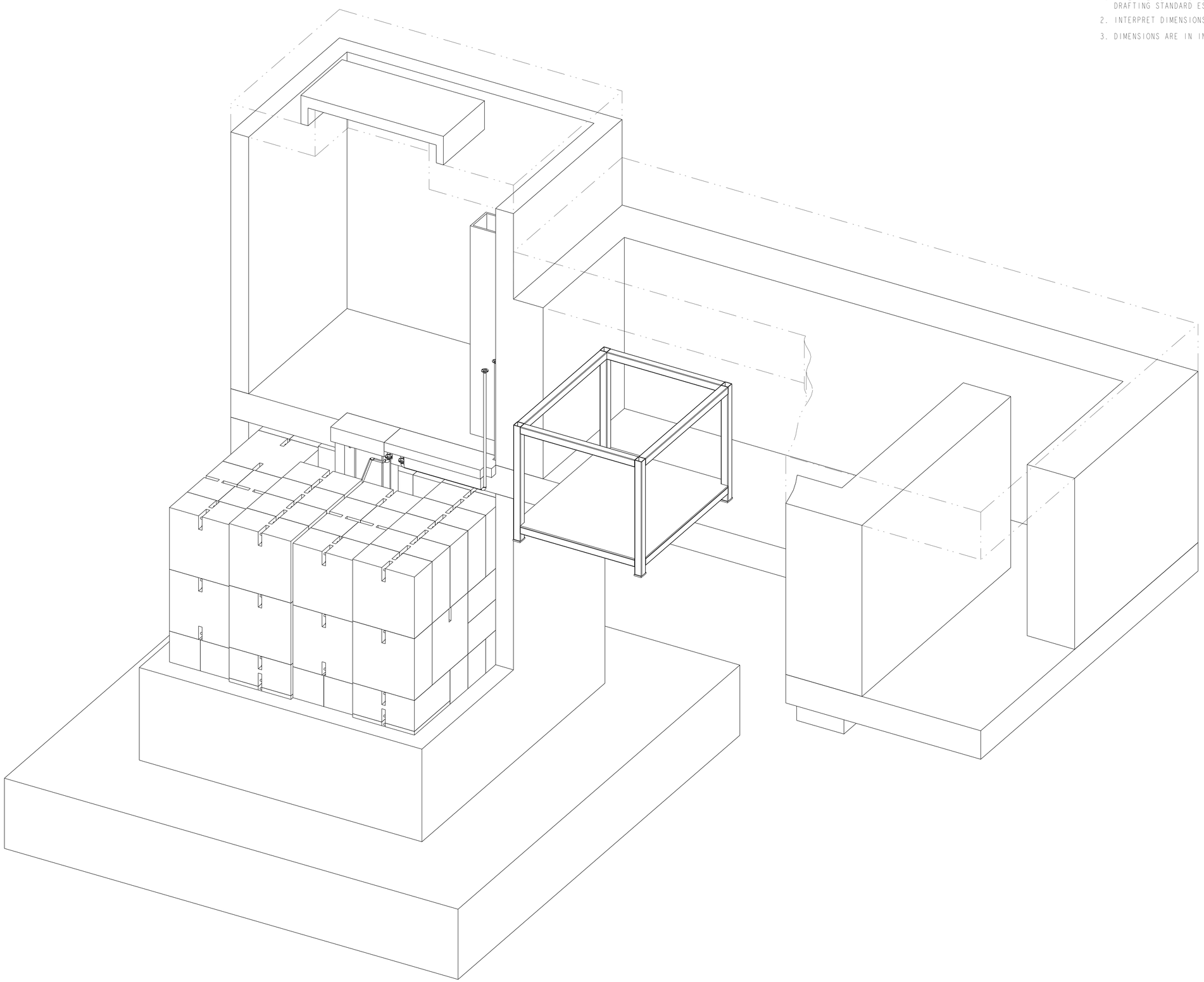

NO REPRESENTATION OR WARRANTY,EXPRESSED OR IMPLIED,IS MADE AS TO THE ACCURACY, COMPLETENESS OR USEFULNESS OF THE INFORMATION OR STATEMENTS CONTAINED IN THESE DRAWINGS, OR THAT THE USE OR DISCLOSURE OF ANY INFORMATION, APPARATUS, METHOD OR PROCESS DISCLOSED IN THESE DRAWINGS MAY NOT INFRINGE PRIVATE RIGHTS OF OTHERS. NO LIABILITY IS ASSUMED WITH RESPECT TO THE USE OF, OR FOR DAMAGES RESULTING FROM THE USE OF, ANY INFORMATION, APPARATUS, METHOD OR PROCESS DISCLOSED IN THESE DRAWINGS. DRAWINGS MADE AVAILABLE FOR INFORMATION TO BIDDER ARE NOT TO BE USED FOR OTHER PURPOSES, AND ARE TO BE RETURNED UPON REQUEST OF THE FORWARDING CONTRACTOR.

P THIS DRAWING PRODUCED ON PRO-ENGINEER

THIS DOCUMENT CONTROLLED BY
CHANGE CONTROL SYSTEM 3
ENGINEERING PROCEDURE ER-C-18

REV	CHANGE TYPE	CHANGE CONTROL SYSTEM	CHANGE REQUEST NUMBER	DESCRIPTION	A-E	BY	CHK	SECT	DEPT	DATE	PE	REQ	DATE	LM-ES	DATE	DOE	DATE	QA	CV	EC	EE	EM	IE	M	PD	SE	ST	XAD	PES
0	-	3	-	GENERAL ISSUE		AVS																							

REVISION OR ISSUE PURPOSE — REVISION APPROVALS — SQUAD CHECK

SCALE .25

TOLERANCES UNLESS OTHERWISE SPECIFIED
FRACTIONS :
XX DECIMALS ±.01
XXX DECIMALS ±.005
ANGLES ±0°15'
BREAK SHARP EDGES .06 MAX
FINISH .125 UNLESS OTHERWISE SPECIFIED

DES	A.SMIRNOV	:
DRW	A.SMIRNOV	:
CHK	:	:
SECT	:	:
DEPT	:	:
PE	:	:
CR	:	:
PJ	:	:
REQ	:	:
	:	:
	:	:
	:	:

DRAWING APPROVALS — DATE

LOCKHEED MARTIN — LOCKHEED MARTIN ENERGY SYSTEMS, INC.
operated for the DEPARTMENT OF ENERGY under U.S. GOVERNMENT contract DE-AC-05-84OR21400
Oak Ridge, Tennessee • Paducah, Kentucky

PROJECT NAME
SNS TARGET SYSTEM

BEAM DUMP ASSEMBLIES
RING INJECTION DUMP
GENERAL ASSEMBLY

1	48	49	50	PLANT	BLDG	FL	SHT	OF	TYPE	CLASS
3	M	E	U	:	:	:	2	5	:	:

51	52	53	
:	:	:	M3E087000K001

REV 0

M3E087000K001

NEXT ASS'Y:

FINAL ASS'Y:

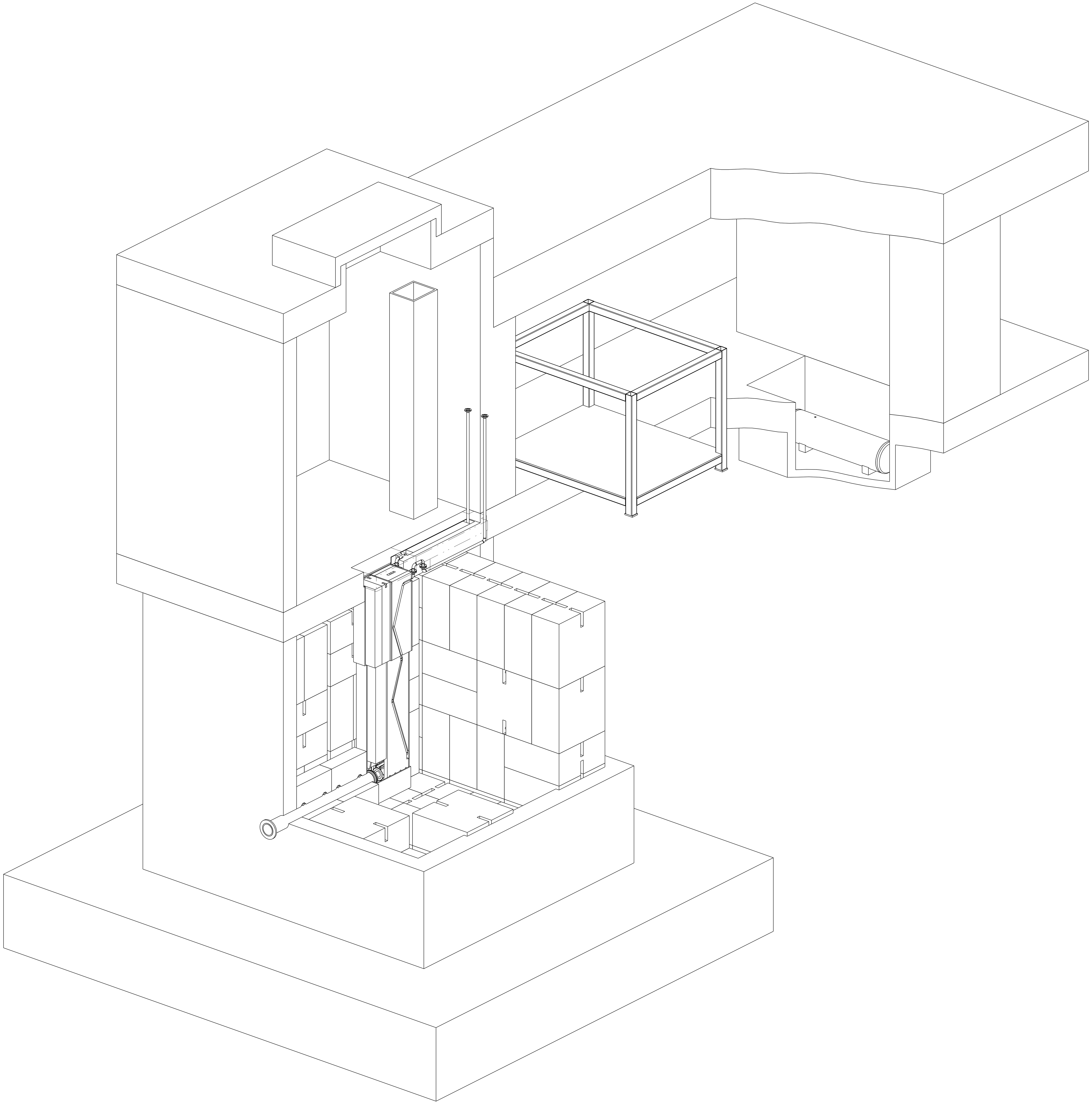

NOTES

1. INTERPRET DRAWING PER MECHANICAL ENGINEERING DRAFTING STANDARD ES-3.1-2.
2. INTERPRET DIMENSIONS AND TOLERANCES PER ANSI Y14.5M.
3. DIMENSIONS ARE IN INCHES.

NO REPRESENTATION OR WARRANTY, EXPRESSED OR IMPLIED, IS MADE AS TO THE ACCURACY, COMPLETENESS OR USEFULNESS OF THE INFORMATION OR STATEMENTS CONTAINED IN THESE DRAWINGS, OR THAT THE USE OR DISCLOSURE OF ANY INFORMATION, APPARATUS, METHOD OR PROCESS DISCLOSED IN THESE DRAWINGS MAY NOT INFRINGE PRIVATE RIGHTS OF OTHERS. NO LIABILITY IS ASSUMED WITH RESPECT TO THE USE OF, OR FOR DAMAGES RESULTING FROM THE USE OF, ANY INFORMATION, APPARATUS, METHOD OR PROCESS DISCLOSED IN THESE DRAWINGS. DRAWINGS MADE AVAILABLE FOR INFORMATION TO BIDDER ARE NOT TO BE USED FOR OTHER PURPOSES, AND ARE TO BE RETURNED UPON REQUEST OF THE FORWARDING CONTRACTOR.

P THIS DRAWING PRODUCED ON PRO-ENGINEER

THIS DOCUMENT CONTROLLED BY
CHANGE CONTROL SYSTEM 3
ENGINEERING PROCEDURE EP-C-18

REV	CHANGE TYPE	CHANGE CONTROL SYSTEM	CHANGE REQUEST NUMBER	DESCRIPTION	A-E	BY	CHK	SECT	DEPT	DATE	PE	REQ	DATE	LM-ES	DATE	DOE	DATE	QA	CV	EC	EE	EM	IE	M	PD	SE	ST	XAD	PES
0	-	3	-	GENERAL ISSUE		AVS																							

REVISION OR ISSUE PURPOSE — REVISION APPROVALS — SQUAD CHECK

SCALE .25

TOLERANCES UNLESS OTHERWISE SPECIFIED

FRACTIONS	:
XX DECIMALS	±.01
XXX DECIMALS	±.005
ANGLES	±0°15'
BREAK SHARP EDGES	.06 MAX
FINISH	.125 UNLESS OTHERWISE SPECIFIED

DRAWING APPROVALS		DATE
DES	A.SMIRNOV	:
DRW	A.SMIRNOV	:
CHK	:	:
SECT	:	:
DEPT	:	:
PE	:	:
CR	:	:
PJ	:	:
REQ	:	:
	:	:
	:	:
	:	:

LOCKHEED MARTIN — LOCKHEED MARTIN ENERGY SYSTEMS, INC.
operated for the DEPARTMENT OF ENERGY under U.S. GOVERNMENT contract DE-AC-05-84OR21400
Oak Ridge, Tennessee • Paducah, Kentucky

PROJECT NAME
SNS TARGET SYSTEM

BEAM DUMP ASSEMBLIES
RING INJECTION DUMP
GENERAL ASSEMBLY

1	48	49	50	PLANT	BLDG	FL	SHT	OF	TYPE	CLASS
3	M	E	U	:	:	:	3	5	:	:

51	52	53		REV
:	:	:	M3E087000K001	0

M3E087000K001

NEXT ASS'Y:

FINAL ASS'Y:

NOTES

1. INTERPRET DRAWING PER MECHANICAL ENGINEERING DRAFTING STANDARD ES-3.1-2.
2. INTERPRET DIMENSIONS AND TOLERANCES PER ANSI Y14.5M.
3. DIMENSIONS ARE IN INCHES.

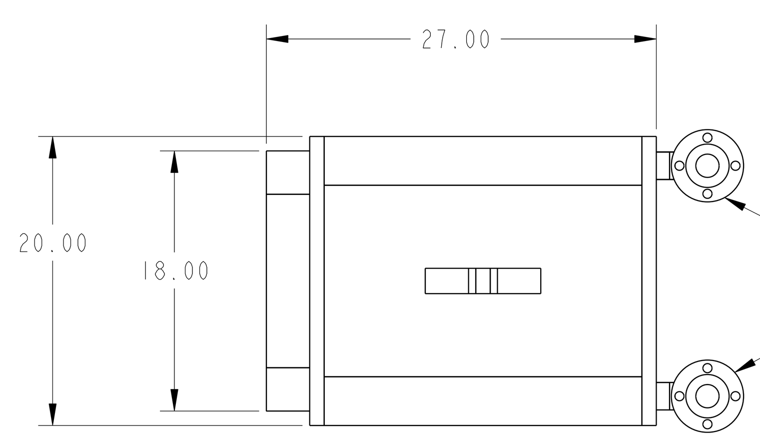

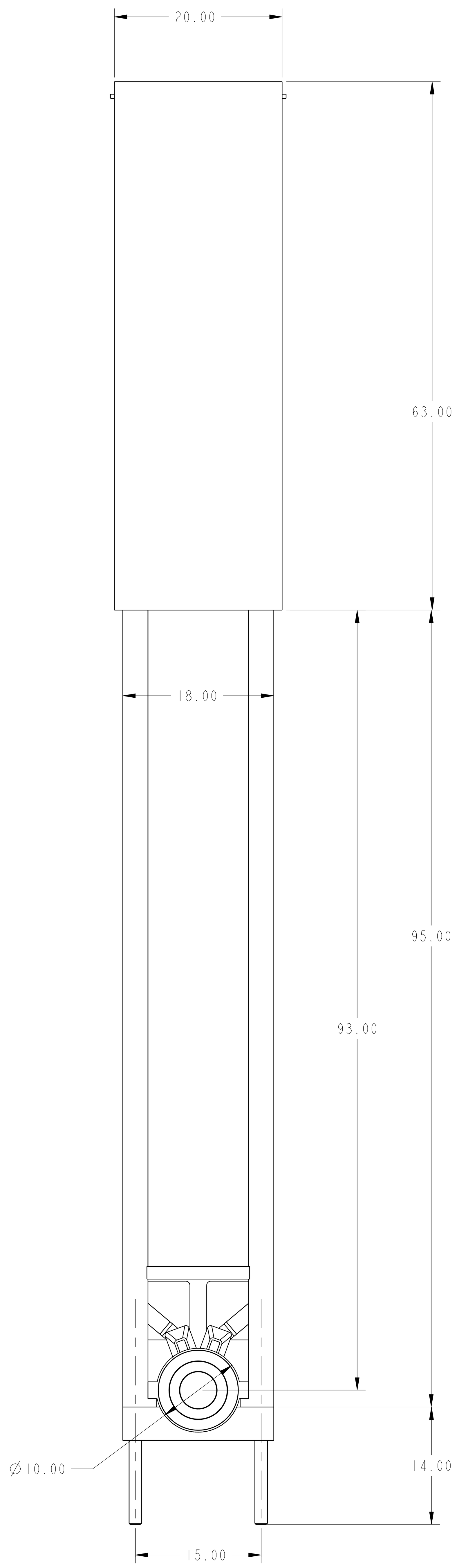

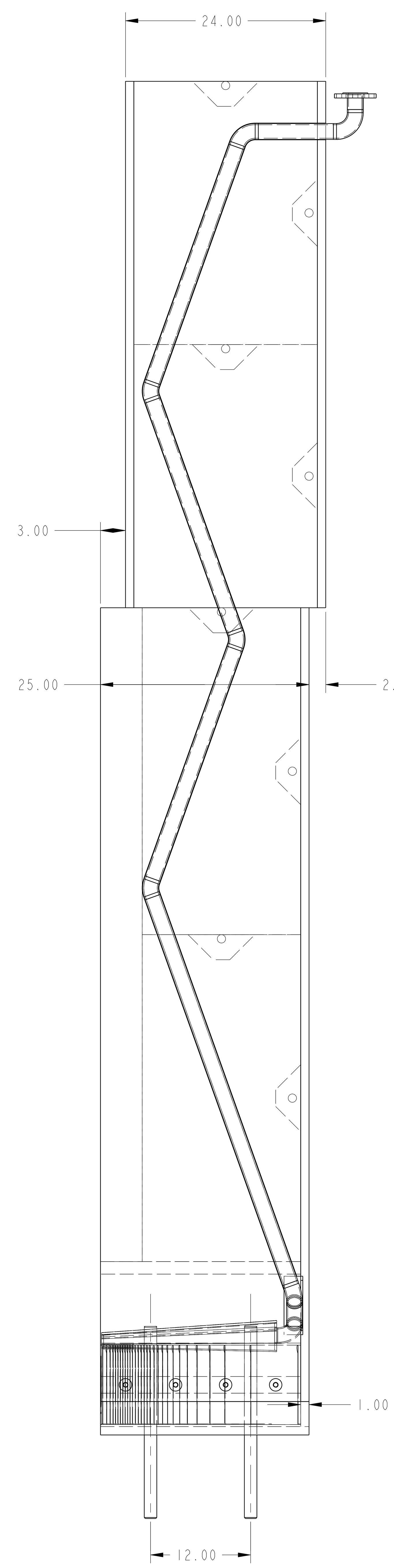

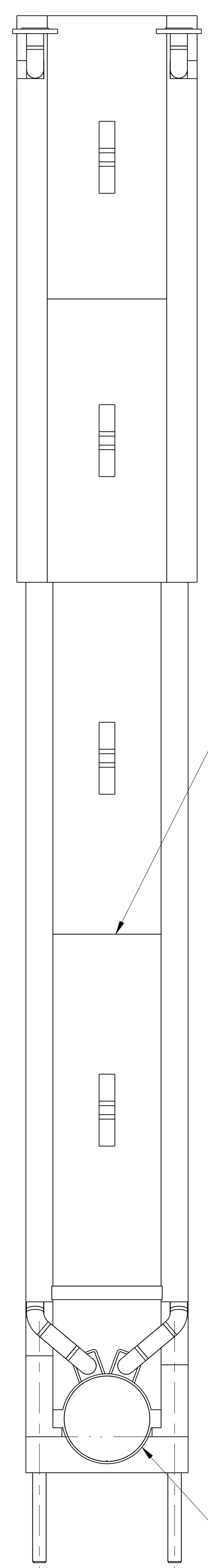

BACK COVER PLATE
NOT SHOWN

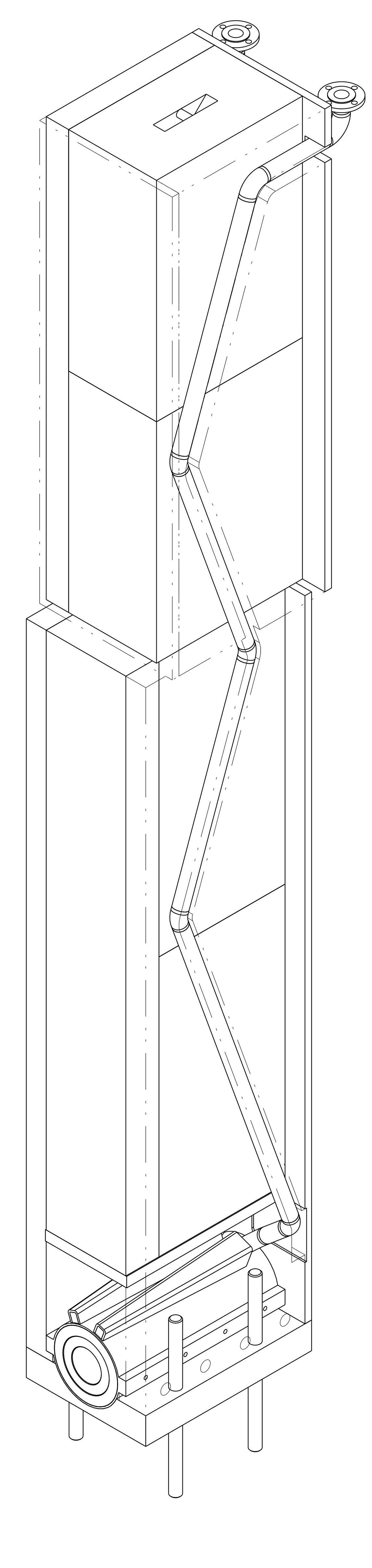

FRONT COVER PLATE
& SIDE PLATE
SHOWN TRANSPARENT

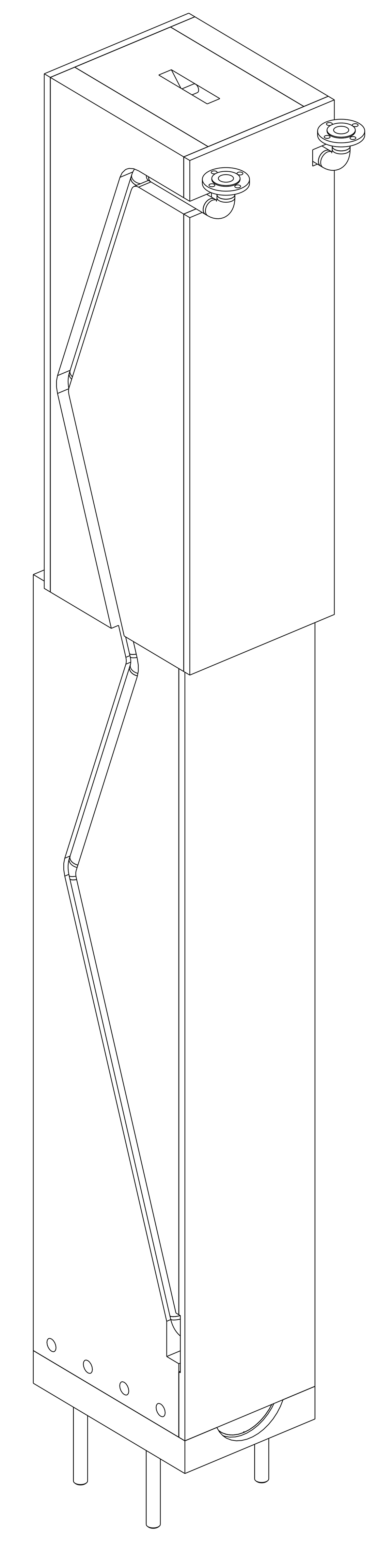

NO REPRESENTATION OR WARRANTY, EXPRESSED OR IMPLIED, IS MADE AS TO THE ACCURACY, COMPLETENESS OR USEFULNESS OF THE INFORMATION OR STATEMENTS CONTAINED IN THESE DRAWINGS, OR THAT THE USE OR DISCLOSURE OF ANY INFORMATION, APPARATUS, METHOD OR PROCESS DISCLOSED IN THESE DRAWINGS MAY NOT INFRINGE PRIVATE RIGHTS OF OTHERS. NO LIABILITY IS ASSUMED WITH RESPECT TO THE USE OF, OR FOR DAMAGES RESULTING FROM THE USE OF, ANY INFORMATION, APPARATUS, METHOD OR PROCESS DISCLOSED IN THESE DRAWINGS. DRAWINGS MADE AVAILABLE FOR INFORMATION TO BIDDER ARE NOT TO BE USED FOR OTHER PURPOSES, AND ARE TO BE RETURNED UPON REQUEST OF THE FORWARDING CONTRACTOR.

P THIS DRAWING PRODUCED ON PRO-ENGINEER

THIS DOCUMENT CONTROLLED BY
CHANGE CONTROL SYSTEM 3
ENGINEERING PROCEDURE EP-C-18

REV	CHANGE TYPE	CHANGE CONTROL SYSTEM	CHANGE REQUEST NUMBER	DESCRIPTION	A-E	BY	CHK	SECT	DEPT	DATE	PE	REQ	DATE	LM-ES	DATE	DOE	DATE
0	-	3	-	GENERAL ISSUE		AVS											

REVISION OR ISSUE PURPOSE — REVISION APPROVALS

SQUAD CHECK: QA | CV | EC | EE | EM | IE | M | PD | SE | ST | XAD | PES

SCALE	.25
TOLERANCES UNLESS OTHERWISE SPECIFIED	
FRACTIONS	:
XX DECIMALS	±.01
XXX DECIMALS	±.005
ANGLES	±0°15'
BREAK SHARP EDGES	.06 MAX
FINISH	.125 UNLESS OTHERWISE SPECIFIED

DRAWING APPROVALS		DATE
DES	A. SMIRNOV	:
DRW	A. SMIRNOV	:
CHK	:	:
SECT	:	:
DEPT	:	:
PE	:	:
CR	:	:
PJ	:	:
REQ	:	:

LOCKHEED MARTIN — LOCKHEED MARTIN ENERGY SYSTEMS, INC.
operated for the DEPARTMENT OF ENERGY under U.S. GOVERNMENT contract DE-AC-05-84OR21400
Oak Ridge, Tennessee • Paducah, Kentucky

PROJECT NAME
SNS TARGET SYSTEM

BEAM DUMP ASSEMBLIES RING INJECTION DUMP GENERAL ASSEMBLY

1	48	49	50	PLANT	BLDG	FL	SHT	OF	TYPE	CLASS
3	M	E	U	:	:	:	4	5	:	:

51	52	53		REV
:	:	:	M3E087000K001	0

M3E087000K001

NEXT ASS'Y: | FINAL ASS'Y:

NOTES

1. INTERPRET DRAWING PER MECHANICAL ENGINEERING DRAFTING STANDARD ES-3.1-2.
2. INTERPRET DIMENSIONS AND TOLERANCES PER ANSI Y14.5M.
3. DIMENSIONS ARE IN INCHES.

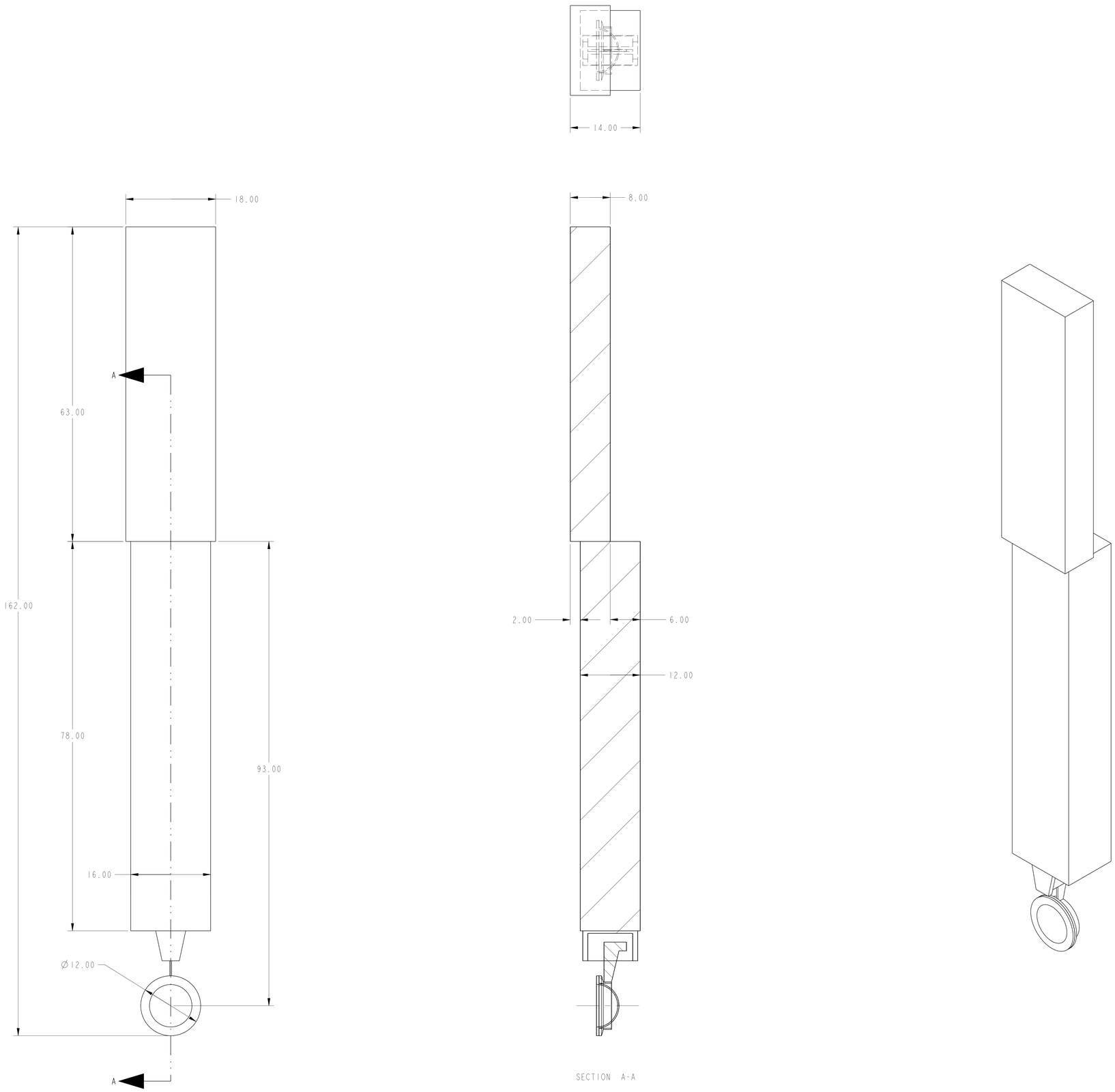

NO REPRESENTATION OR WARRANTY,EXPRESSED OR IMPLIED,IS MADE AS TO THE ACCURACY, COMPLETENESS OR USEFULNESS OF THE INFORMATION OR STATEMENTS CONTAINED IN THESE DRAWINGS, OR THAT THE USE OR DISCLOSURE OF ANY INFORMATION, APPARATUS, METHOD OR PROCESS DISCLOSED IN THESE DRAWINGS MAY NOT INFRINGE PRIVATE RIGHTS OF OTHERS. NO LIABILITY IS ASSUMED WITH RESPECT TO THE USE OF, OR FOR DAMAGES RESULTING FROM THE USE OF, ANY INFORMATION, APPARATUS, METHOD OR PROCESS DISCLOSED IN THESE DRAWINGS. DRAWINGS MADE AVAILABLE FOR INFORMATION TO BIDDER ARE NOT TO BE USED FOR OTHER PURPOSES, AND ARE TO BE RETURNED UPON REQUEST OF THE FORWARDING CONTRACTOR.

P THIS DRAWING PRODUCED ON PRO-ENGINEER

THIS DOCUMENT CONTROLLED BY
CHANGE CONTROL SYSTEM 3
ENGINEERING PROCEDURE EP-C-18

REV	CHANGE TYPE	CHANGE CONTROL SYSTEM	CHANGE REQUEST NUMBER	DESCRIPTION	A-E	BY	CHK	SECT	DEPT	DATE	PE	REQ	DATE	LM-ES	DATE	DOE	DATE	QA	CV	EC	EE	EM	IE	M	PD	SE	ST	XAD	PES
0	-	3	-	GENERAL ISSUE		AVS																							

REVISION OR ISSUE PURPOSE — REVISION APPROVALS — SQUAD CHECK

SCALE .25

TOLERANCES UNLESS OTHERWISE SPECIFIED
FRACTIONS ±
XX DECIMALS ±.01
XXX DECIMALS ±.005
ANGLES ±0° 15'
BREAK SHARP EDGES .06 MAX
FINISH 125 UNLESS OTHERWISE SPECIFIED

DES	A.SMIRNOV	:
DRW	A.SMIRNOV	:
CHK	:	:
SECT	:	:
DEPT	:	:
PE	:	:
CR	:	:
PJ	:	:
REQ	:	:
	:	:
	:	:
	:	:
DRAWING APPROVALS		DATE

LOCKHEED MARTIN — LOCKHEED MARTIN ENERGY SYSTEMS, INC.
operated for the DEPARTMENT OF ENERGY under U.S. GOVERNMENT contract DE-AC-05-84OR21400
Oak Ridge, Tennessee • Paducah, Kentucky

PROJECT NAME: SNS TARGET SYSTEM

BEAM DUMP ASSEMBLIES
RING INJECTION DUMP
GENERAL ASSEMBLY

1	48	49	50	PLANT	BLDG	FL	SHT	OF	TYPE	CLASS
3	M	E	U	:	:	:	5	5	:	:

51 : 52 : 53 : M3E087000K001 REV 0

M3E087000K001