MEBT LLRF Chassis, Front Panel.

Note: Back up system chassis has no Front Panel controls, except for status lights and some connectors.

LLRF Back Up System

MEBT LLRF Chassis, Rear Panel.

Note: New back up system chassis has LEMO, DB9, PKZ style connectors.

MEBT LLRF Chassis

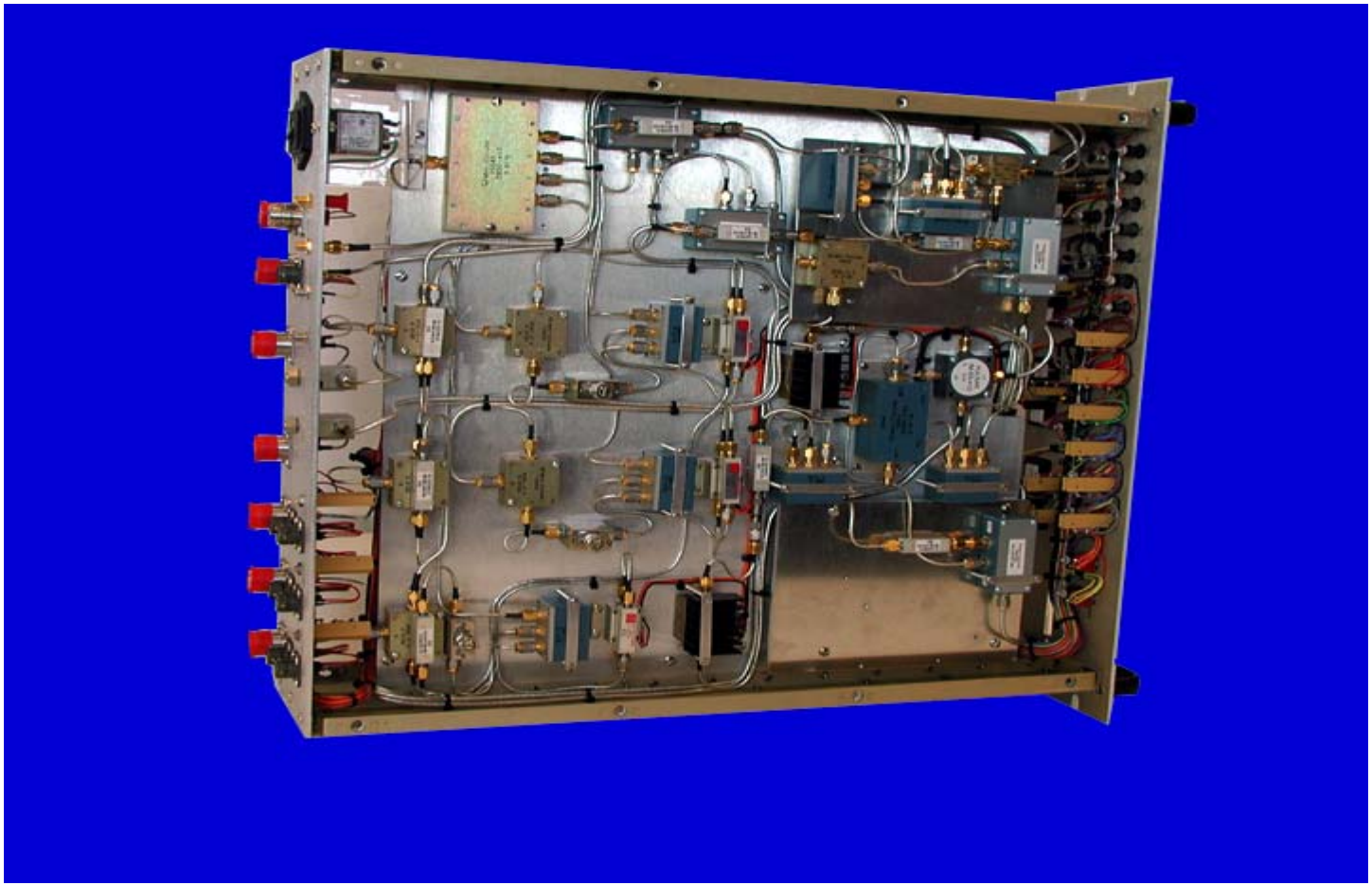

View of Connectorized components

MEBT LLRF Chassis

View of Analog Board

MEBT LLRF Chassis

Digital Card

LLRF Back Up System

New Features

• An input LO signal level of +5 dBm is boosted to +28 dBm using a PA, MC - ZHL-1000VH2, 15V,0.32 ~ 5W

• There are 4 other input channels, Forward, Reverse, Cavity,and Phase Ref. These signals are amplified using a high bandwidth Operational Amplifier OPA 685, then input to the ADC, ADS808

• The Drive signal level is +10 dBm. This connectorized components chain contains a PIN switch ,a power amplifier, MC – 1000H, 15 V, 0.16A,~2.5W

•Self Test Mode, when a Forward signal is not present, output is fed back to the Forward channel to test system's health.

LLRF Back Up System RF Signal Levels

M. Monroy/L. Doolittle
LLRFBU_sys, 7/24/02

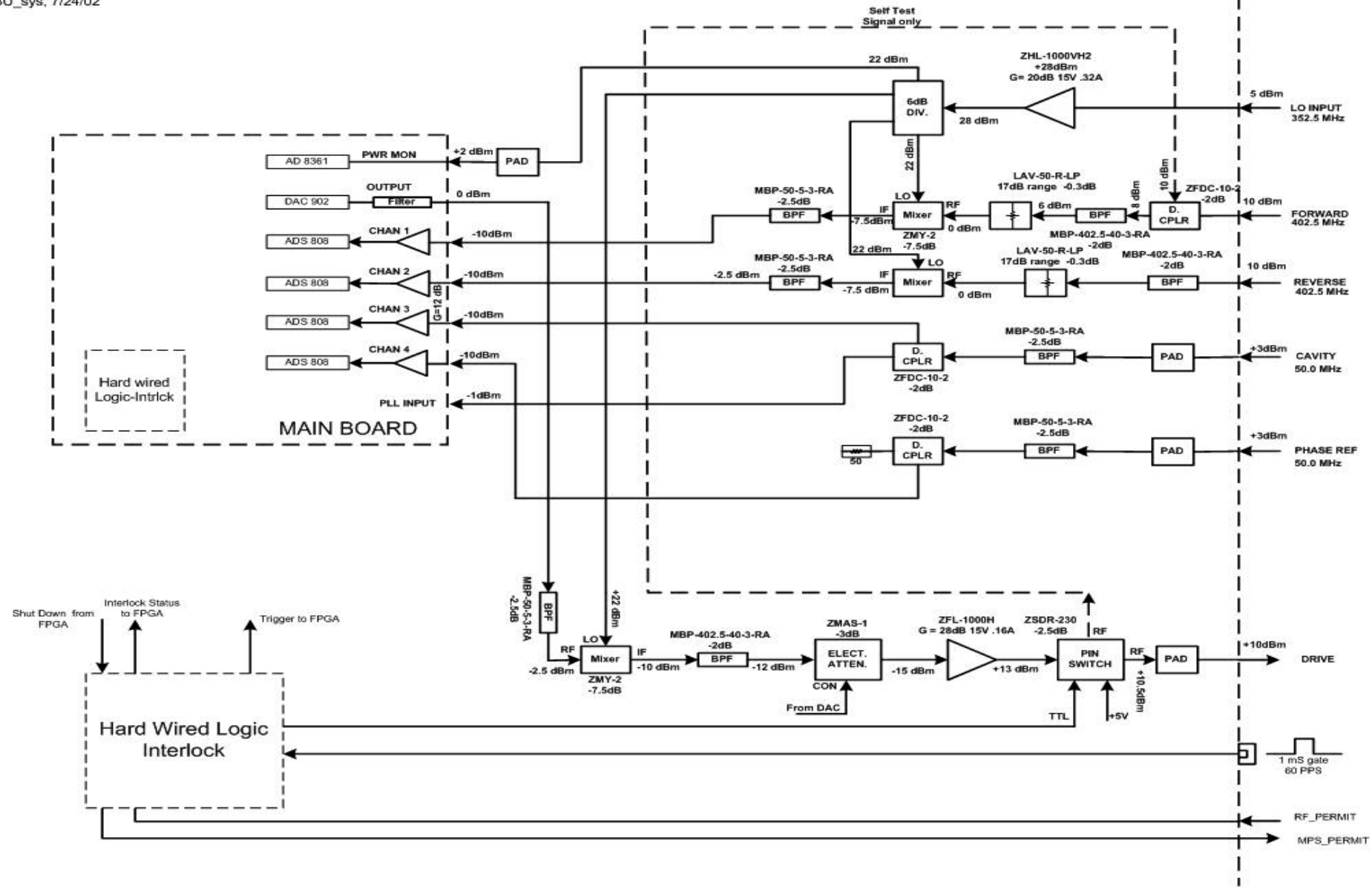

LLRF Back Up System

Old MEBT LLRF System

- Four Unit 19” rack mount chassis.
- Two separate PCB’s, Digital Card and Analog Board.
- Front Panel Manual Controls.
- Power consumption is much higher.

New Back Up LLRF System

- Three Unit 19” rack mount chassis.
- One PCB integrates Digital and Analog.
- Front Panel has status lights, PKZ, DB9 Connectors
- These connectors ensure compatibility to LANL’s system design.
- Compactness and power dissipation a design priority.