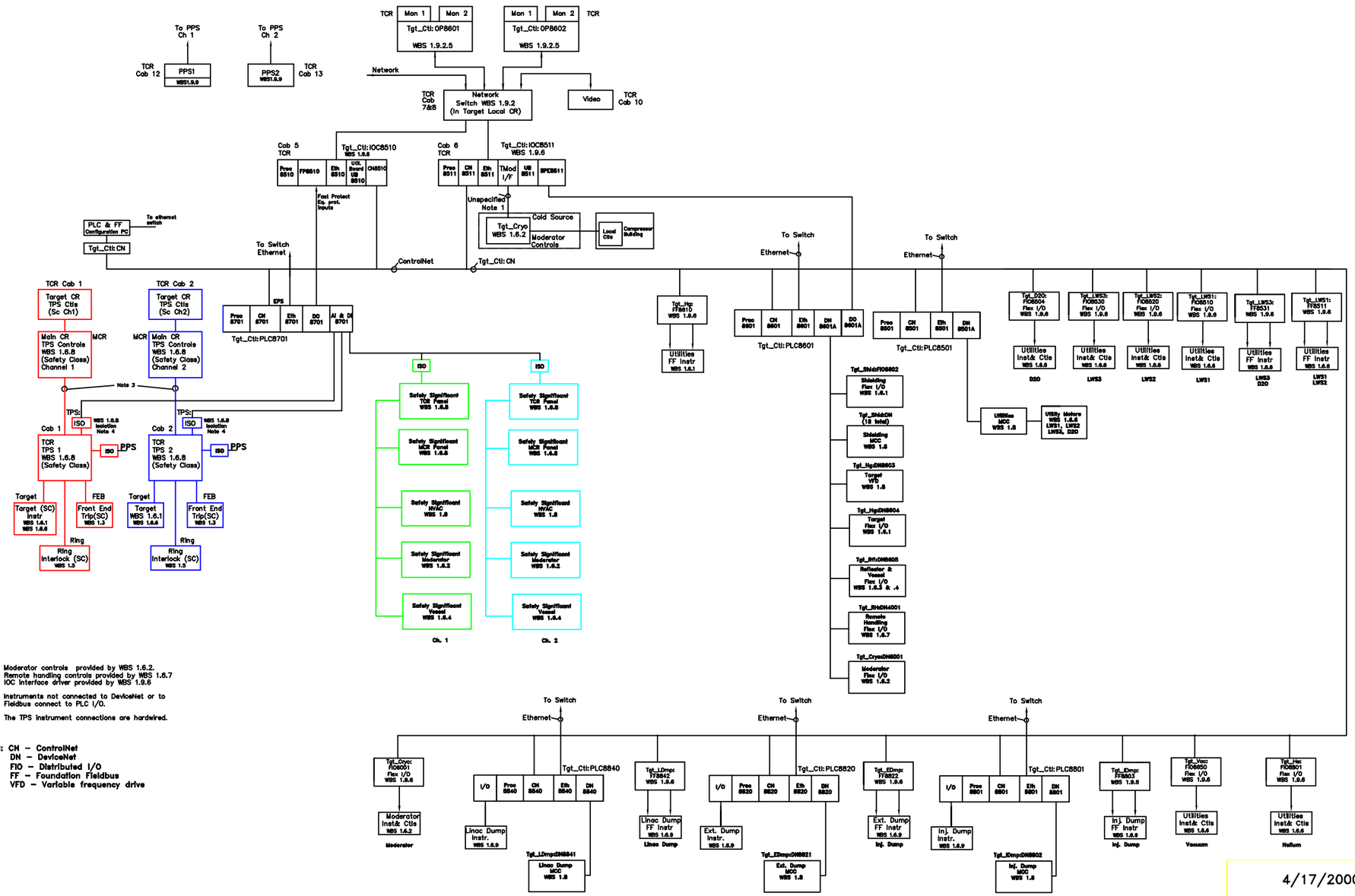

Notes: 1. Moderator controls provided by WBS 1.6.2.
Remote handling controls provided by WBS 1.6.7
IOC interface driver provided by WBS 1.9.6

2. Instruments not connected to DeviceNet or to Fieldbus connect to PLC I/O.

3. The TPS instrument connections are hardwired.

Legend: CN – ControlNet
DN – DeviceNet
FIO – Distributed I/O
FF – Foundation Fieldbus
VFD – Variable frequency drive

4/17/2000 Revision

NO REPRESENTATION OR WARRANTY, EXPRESSED OR IMPLIED, IS MADE AS TO THE ACCURACY, COMPLETENESS OR USEFULNESS OF THE INFORMATION CONTAINED IN THESE DRAWINGS, OR THAT THE USE OR DISCLOSURE OF ANY INFORMATION, APPARATUS, METHOD, OR PROCESS DISCLOSED IN THE DRAWING WILL NOT INFRINGE PRIVATELY OWNED RIGHTS. NEITHER THE UNITED STATES GOVERNMENT NOR THE U.S. DOE FOR MANAGEMENT FROM THE USE OF ANY INFORMATION, APPARATUS, METHOD, OR PROCESS DISCLOSED IN THESE DRAWINGS. DRAWINGS MADE AVAILABLE FOR INFORMATION TO VENDOR AND NOT TO BE USED FOR OTHER PURPOSES AND ARE TO BE RETURNED UPON REQUEST OF THE TURNKEYING CONTRACTOR.

NUMBER OF SECTION OR DETAIL
DRAWING ON WHICH SECTION OR DETAIL IS SHOWN
DRAWING ON WHICH SECTION OR DETAIL IS SHOWN
SECTION AND DETAIL KEY

THIS DOCUMENT CONTROLLED BY
CHANGE CONTROL SYSTEM
ENGINEERING PROCEDURE

REV	DESCRIPTION	BY	CHK	SECT	DEPT	DATE	PE	REQ	DATE	LMER	DATE	RPE	RPE NO	DATE
	REVISION OR ISSUE PURPOSE					REVISION APPROVALS								

ST	CV	EC	EE	EH	IE	M	PD	SE	AR
SQUAD CHECK									

REV.	DATE	LMER
DRAWING APPROVALS		

RPE
DSGN
DRV
CHKR
SECT
DEPT
PE
PJ
REQ

LOCKHEED MARTIN
LOCKHEED MARTIN ENERGY RESEARCH CORP. managed for the DEPARTMENT OF ENERGY under U.S. GOVERNMENT contract DE-AC05-96OR22464
Oak Ridge National Laboratory — Oak Ridge, Tennessee

PROJECT NAME
SPALLATION NEUTRON SOURCE

Target Control System Block Diagram Sheet 1

1	48	49	50	PLANT	BLDG	FL	SH	DF	TYPE	CLASS	REV
3				8	8xxx						
	51		52		53						0

109060000-I8E8700-A001