SNS Integrated Control System

(Plenary Session)

DOE Review, January 26-28, 1999
ORNL

Dave Gurd

Personnel are available for Year 1

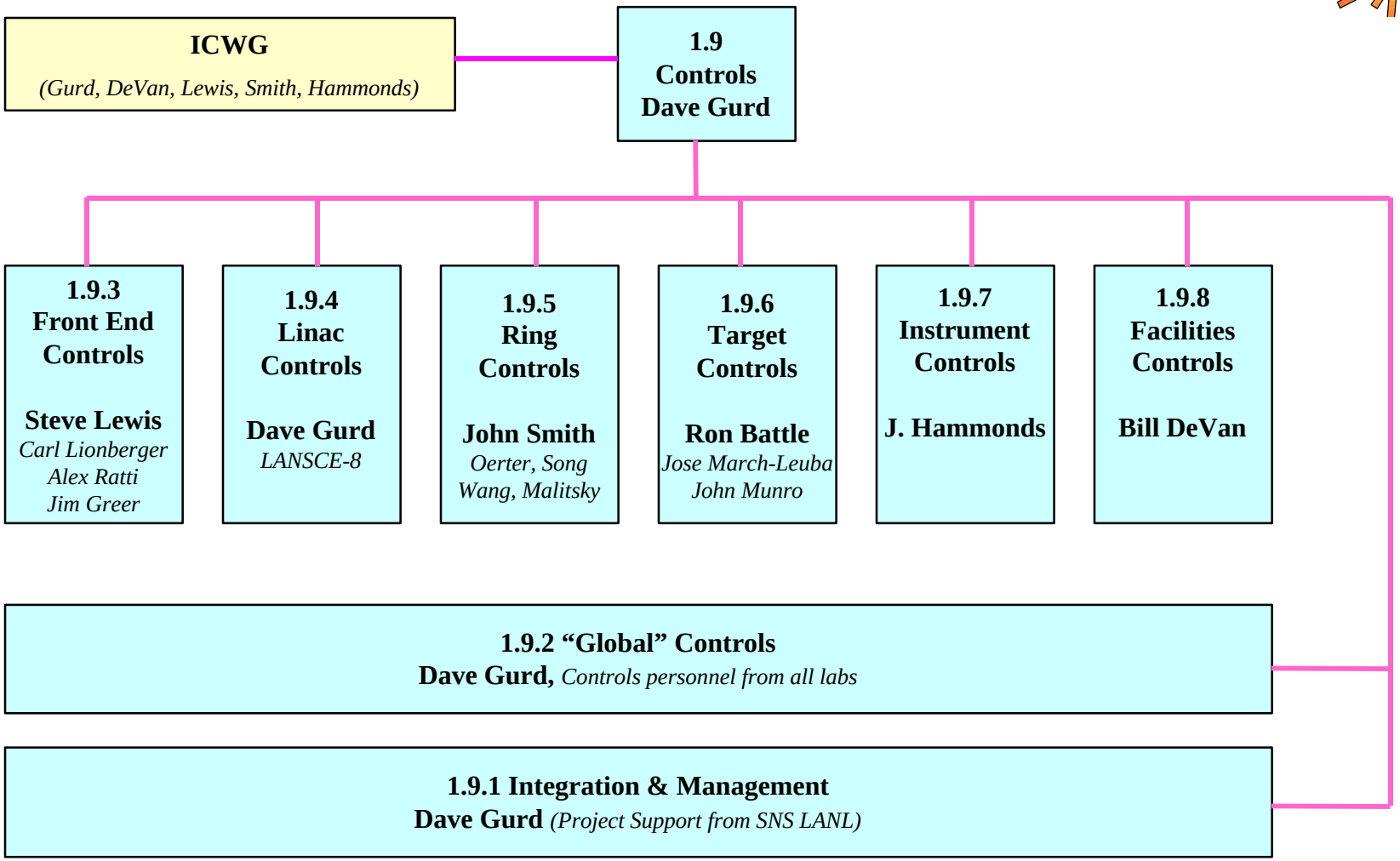

Cost is based upon a defined interface

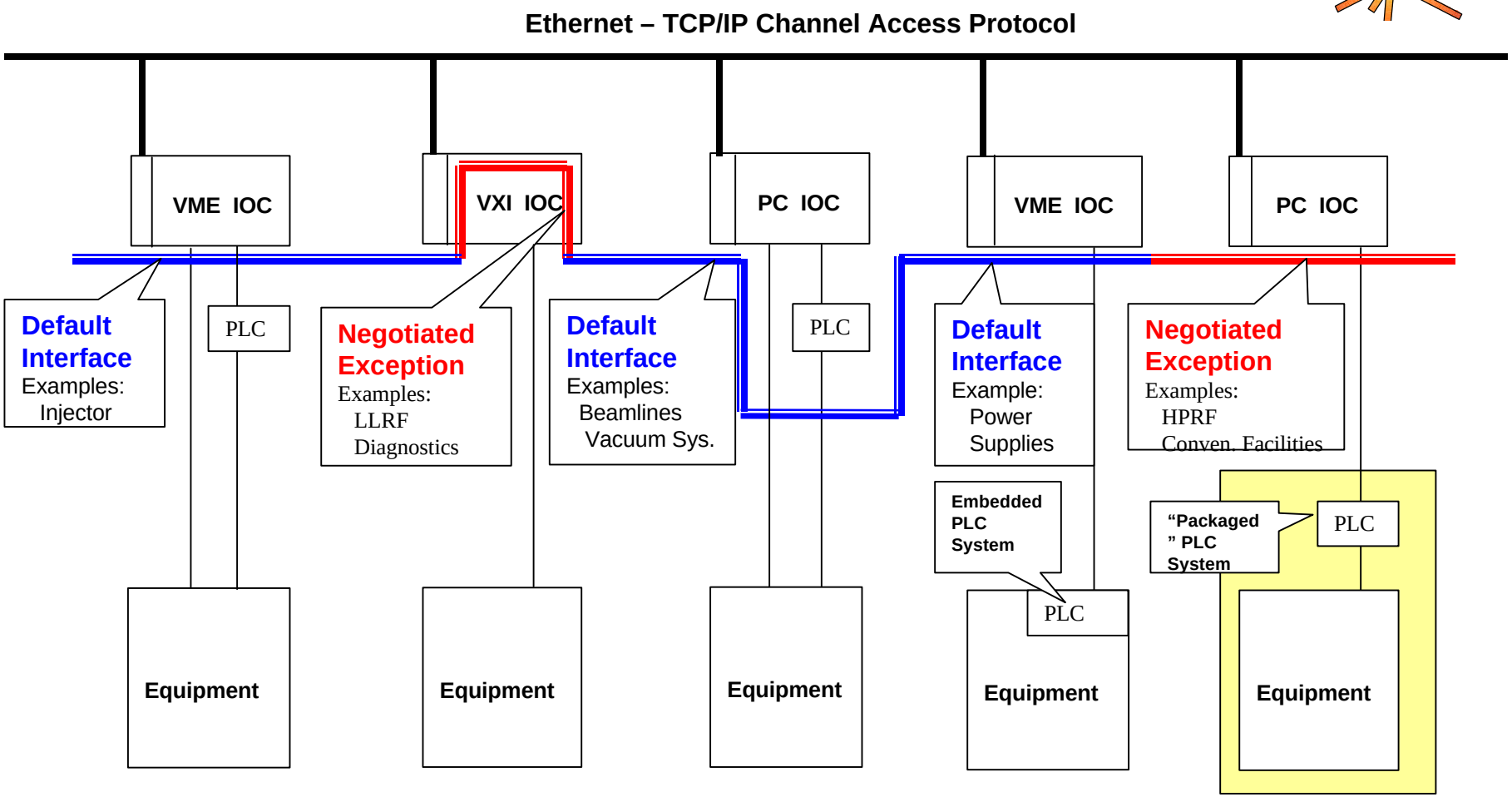

IOC = Input.Output Controller
PLC = Programmable Logic Controller
PC = Personal Computer

Technical Progress since 6/98 Review

- Channel Count reviewed and improved
- Ring timing requirements document prepared
- White paper on protection systems prepared
- Draft network design prepared - review in March
- Distributed Code Management System operating at ORNL
- Draft Application Development Document prepared
- Team visit to BESSY II
  - » Oracle Database
  - » Fieldbus
  - » Graphical Tools
  - » Architecture and Platforms

Administrative Progress since 6/98 Review

- Linac cost estimate (1.9.4) reviewed and improved
- Value Engineering resulted in $1.6M reduction
- Excellent hiring of EPICS expertise at BNL
- Subproject schedules reviewed and links and milestones added
- Global schedule links and milestones added
- Routine CPR reporting begun - we are learning how to deal with the complex Global Controls WBS

WBS 1.9 contributed $1.6M to the Value Engineering Effort

Reduce S/W Development System	$200K
Defer Interface to Predictive Maintenance	$400K
Eliminate Interface to "Business Computing System"	$400K
Controls Savings for Linac VE changes	$175K
Controls Savings for Ring VE Changes	$431K
» (including reduced application programming)	
Total:	**$1.6M**

BA/BO Profiles for WBS 1.9

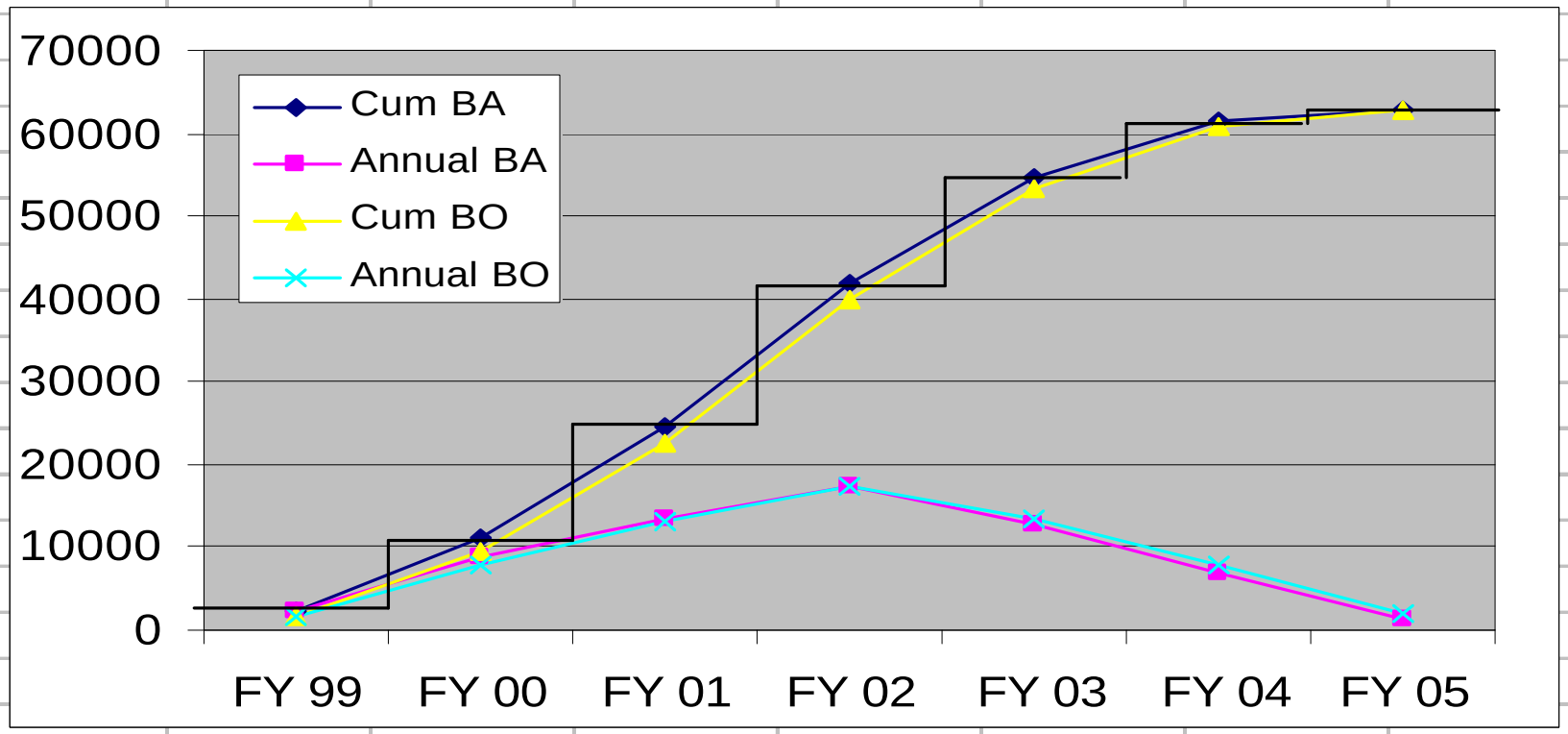

	FY 99	FY 00	FY 01	FY 02	FY 03	FY 04	FY 05
Annual BO	1683	7852	13017	17404	13269	7768	1880
Annual BA	2195	8992	13380	17233	12664	6967	1442
Cum BO	1683	9535	22552	39956	53225	60993	62873
Cum BA	2195	11187	24567	41800	54464	61431	62873

FTE Profile for WBS 1.9

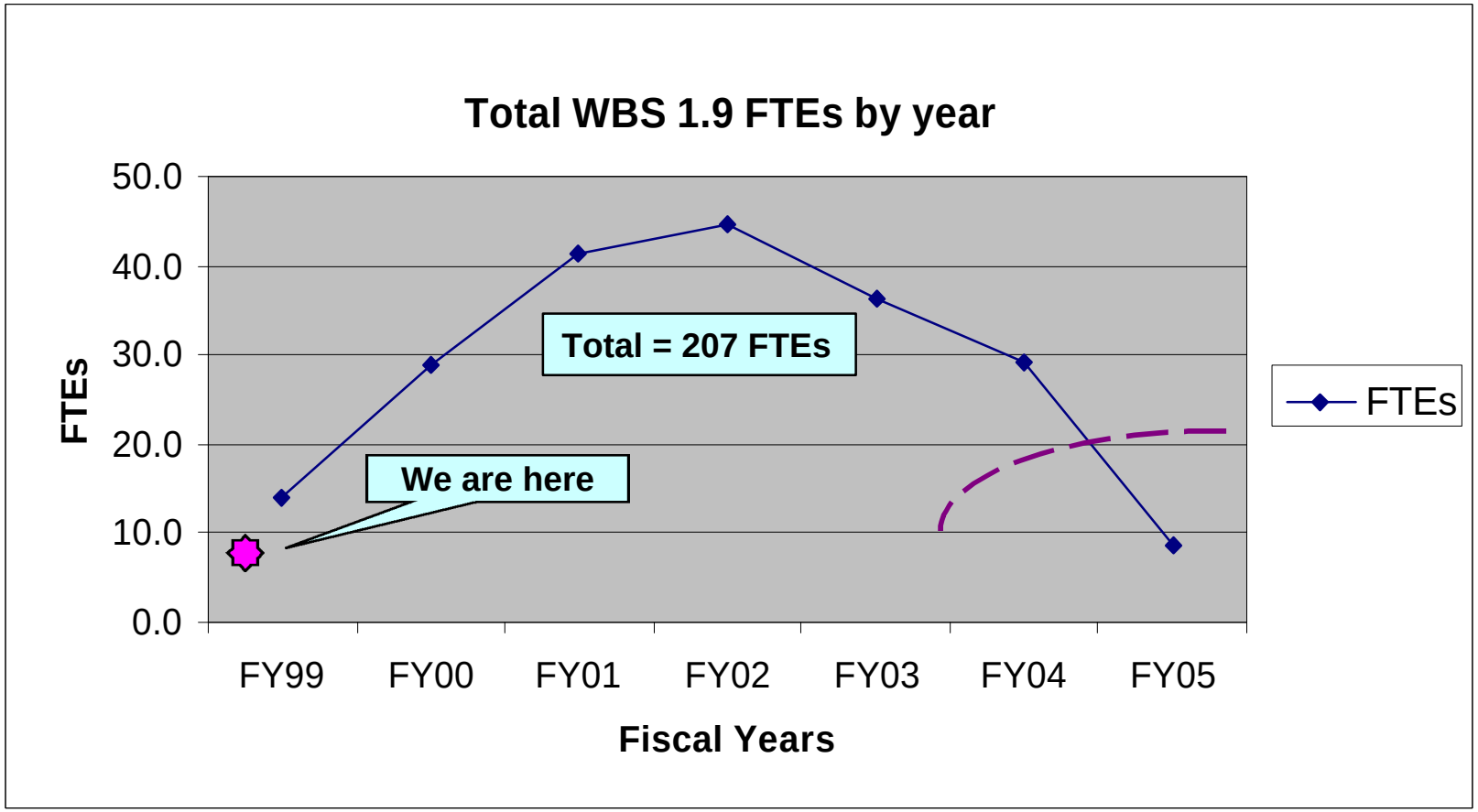

Front End “integrated subproject network”

Activity ID	Orig Dur	Early Start	Early Finish
CT01090021	268*	01OCT98A	26OCT99
CT09020034	438*	27OCT99	30JUL01
CT09020065	312*	31JUL00	25OCT01
CT09020040	188*	01MAY01	31JAN02
CT09000040	0	01FEB02*	
CT09020050	62*	01FEB02	30APR02
CT09020070	40*	02APR02	29MAY02
CT09020075	0		29MAY02
CT09020076	10	19AUG02	30AUG02
CT09020077	0		30AUG02
CT09020078	30	19AUG02	30SEP02
CT09020079	0	01OCT02*	

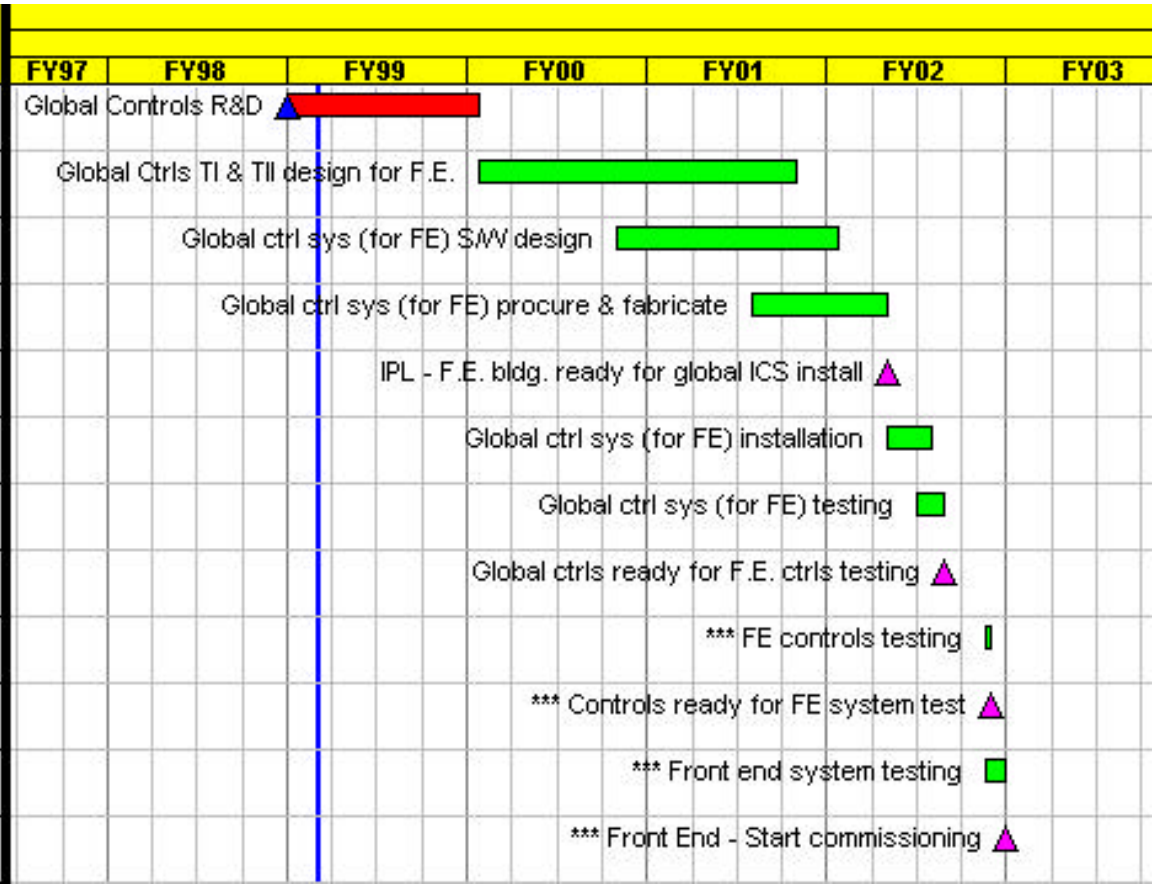

*** Activities from other subprojects

Control Milestones appear with subprojects

##	Description	WBS Number (Level 4/5)	Expected Date	Notes
1	Freeze Physics Design	1.1.2.1	3/1/99	
2	Chopper Prot. Struct. & POP Electronics tested	1.1.2.8	9/1/99	
3	Prototype Klystrons Tested	1.1.2.7	11/1/99	
4	Linac Interface Definition Documents Complete	1.4.6	12/1/99	*5 Total*
5	CCL, CCDTL Hot Model Tests complete	1.1.2.2	5/1/00	
6	805 MHz Klystron Contract(s) placed	1.4.1.1	5/1/00	
7	Diagnostics System Prototypes Tested	1.4.5.2	9/1/00	
8	Prelim. Model IGBT Tested	1.4.1.1	10/1/00	
9	Start Fabrication of DTL Structure	1.4.2.2	12/6/00	
10	CCL FDR Complete	1.4.4.2	1/6/01	
11	Start Fabrication CCL & CCDTL Mech Supt.	1.4.3.6, 1.4.4.6	3/1/01	
12	Low Level RF System - FDR Complete	1.4.1.3	4/1/01	*FDR=Final Design Review*
13	Place Final contract for IGBT components	1.4.1.1	4/1/01	
14	402.5 MHz Klystrons Acceptance Tested	1.4.1.1	9/1/01	
15	Complete DTL Component Fabrication	1.4.2	12/13/01	
16	Complete mapping of CCDTL magnets	1.4.3.3	4/1/02	
17	Chopper and FE/RFQ RF Complete	1.4.5.1 & 1.4.1.2	5/1/02	*installed & tested @ ORNL*
18	Final Commissioning Plan for DTL Complete	1.4.5.3 & 1.10	11/1/02	
19	Complete CCL Vac & Water Systems checkout	1.4.4.4 & 1.4.4.5	3/1/03	
20	Start Commissioning DTL1	1.4, 1.9.4 & 1.10	3/7/03	
21	Start Commissioning DTL2	1.4., 1.9.4 & 1.10	8/1/03	
22	Decide Commissioning Strategy for CCDTL	1.4.5.3	11/1/03	
23	Deliver 1st beam thru CCDTL1	1.4, 1.9.4. & 1.10	1/14/04	
24	Last CCL Klystron & IGBT conditioned	1.4.1.1	9/1/04	
25	CCL structure & diagnostics installed	1.4.4, 1.4.5.2	10/1/04	
26	Deliver 1st beam thru CCL	1.4., 1.9.4 & 1.10	12/20/04	
27	Bunch Rotator Complete	1.4.4.7 & 1.4.1.5	2/1/05	*RF & structure Installed and tested*
28	Beam to HEBT	1.4., 1.9.4 & 1.10	2/10/05	
29	LINAC Project Accepted	1.4. & 1.9.4	8/1/05	
30	Acceptance Report & Costed Completion	1.4.6	4/1/06	

Summary

- All earlier review comments addressed
- Functional Requirements and Interfaces understood
  - » No technical “show-stoppers” identified
- Schedule and cost data loaded in Primavera.
  - » WBS 1.9 rolled-up monthly CPRs delivered
- Level 3 leaders in place
  - » Year One personnel identified and available
  - » Excellent hiring at BNL
- Good start in several technical areas:
  - » Timing, Protection, Network, Application Development, Tools
- We are off and running