Continue from
109040000R8D8300W010 Sheet 1

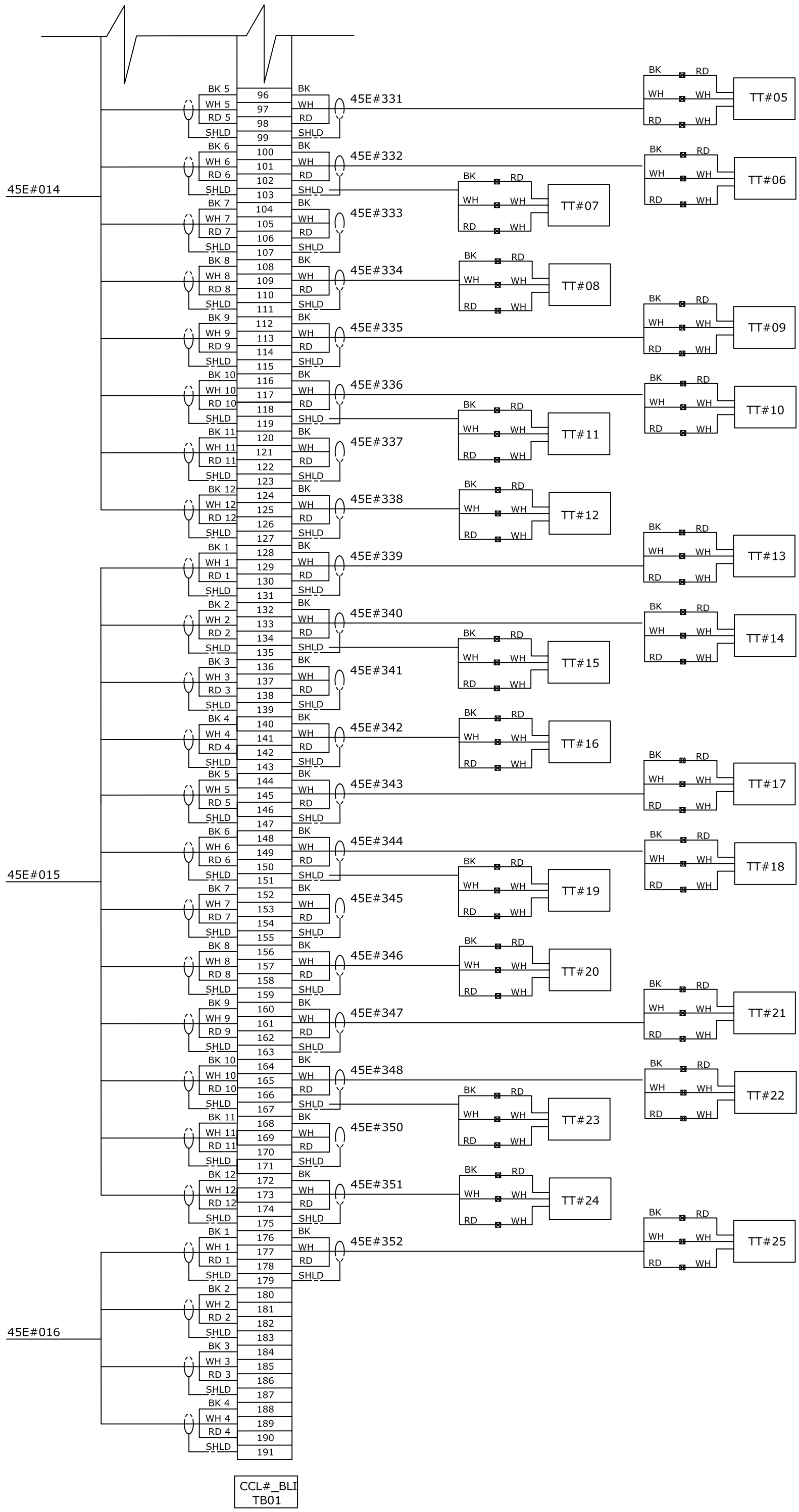

NOTE: "#"is the CCL Module Number.

REVISION APPROVALS					
BY	CHK	SECT	DEPT	DATE	
XXX	—	—	—	XX/XX/XX	LE
					L3TL
					CHK
					DWN
					DES

DRAWING APPROVALS	
STL	
DWN	DERRICK WILLIAMS
DES	DERRICK WILLIAMS
DATE	02/24/04
DATE	02/24/04

REV	DESCRIPTION	REVISION OR ISSUE PURPOSE
A	PRELIMINARY	

Oak Ridge National Laboratory
operated by the DEPARTMENT OF ENERGY
Oak Ridge, Tennessee
contract DE-AC-05-84OR21400

SNS Spallation Neutron Source

CCL RCCS CONTROL WIRING
BEAM LINE INTERFACE TB01
Sheet 2

DRAWING NUMBER
109040000R8D8300W010

REV 0