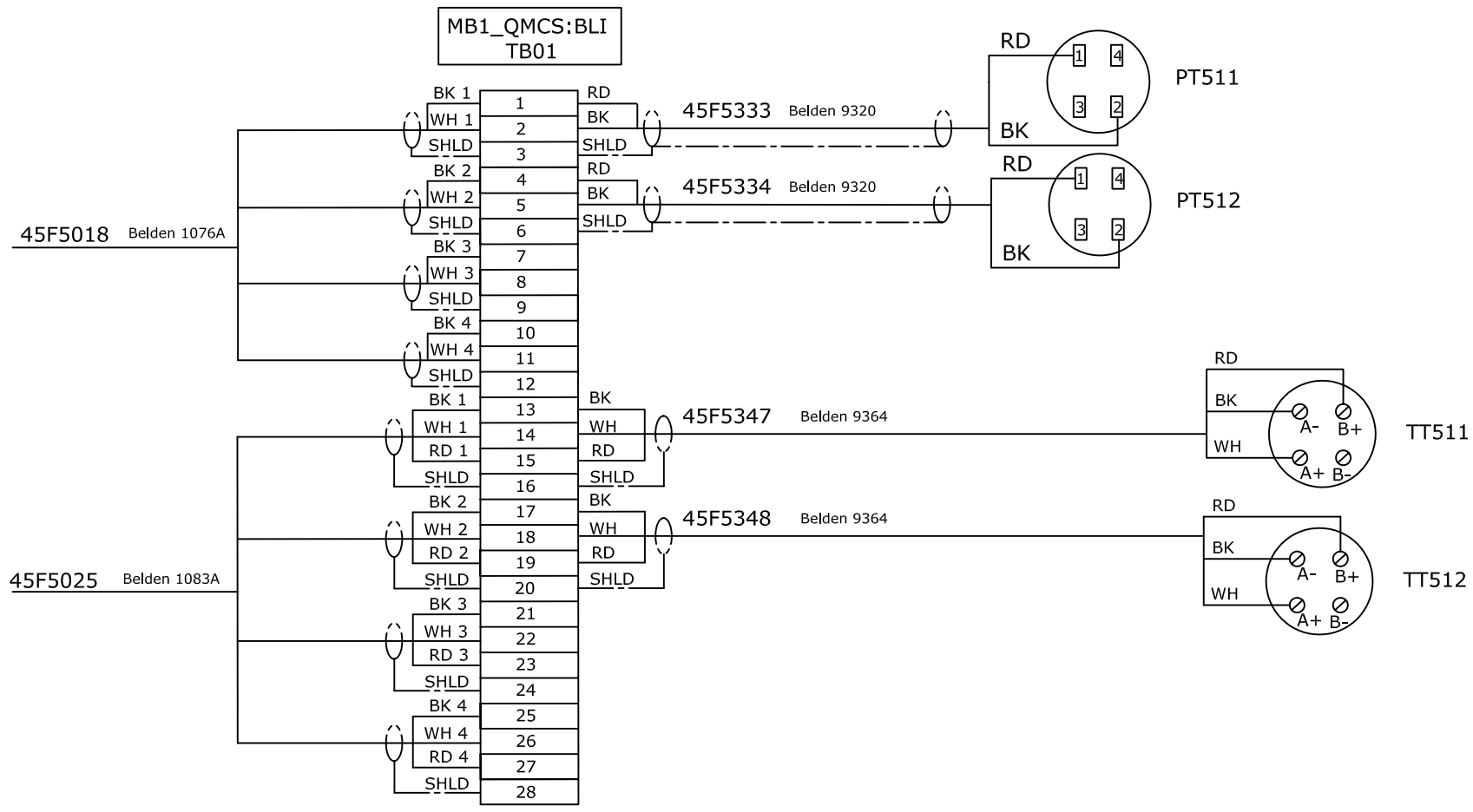

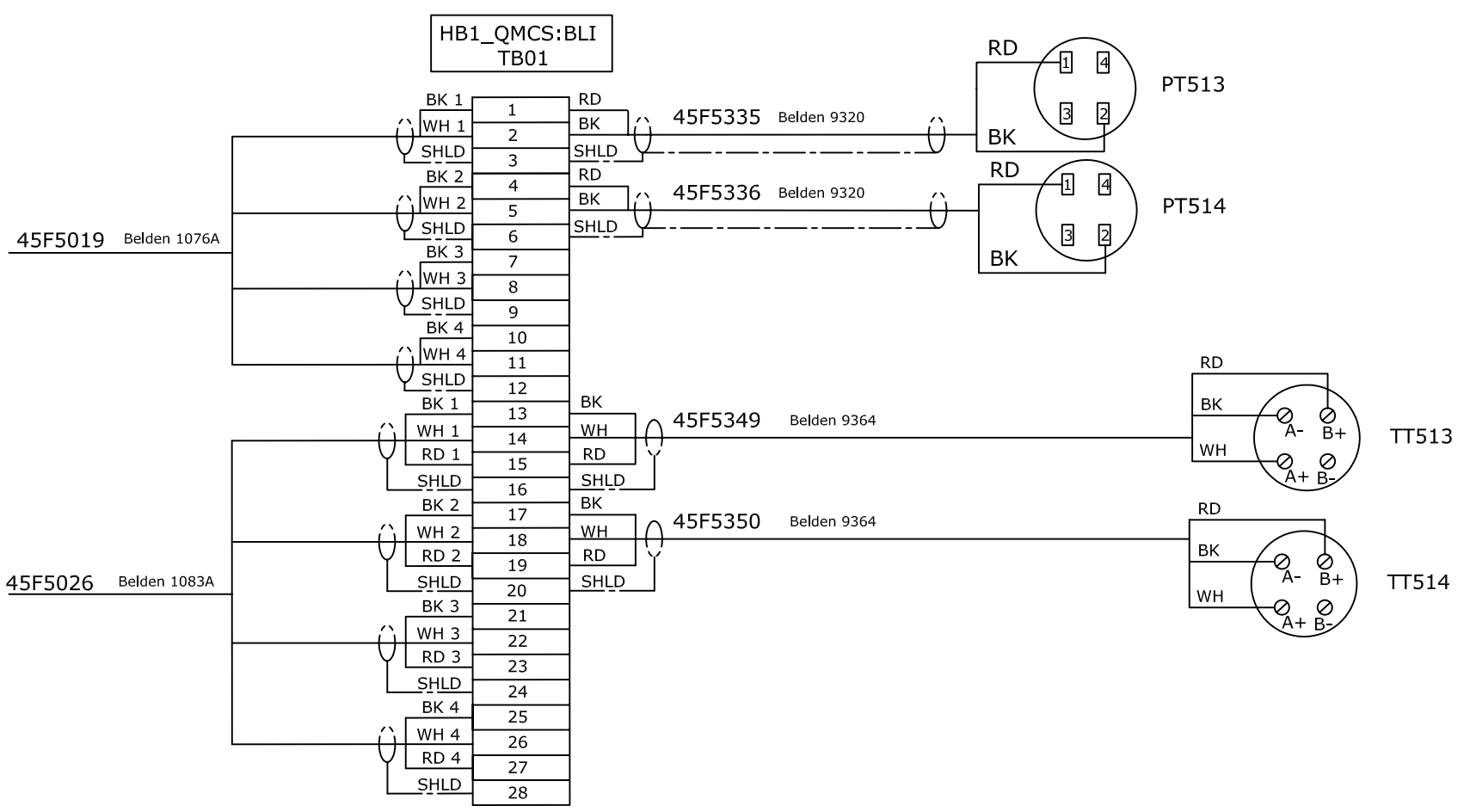

REV	DESCRIPTION	BY	CHK	SECT	DEPT	DATE	STL	LE	L3TL	CHK	DWN	DES	DATE
A	PRELIMINARY	XXX	—	—	—	XX/XX/XX					DERRICK WILLIAMS	DERRICK WILLIAMS	11/21/03

REVISION OR ISSUE PURPOSE — REVISION APPROVALS — DRAWING APPROVALS — DATE

Oak Ridge National Laboratory
operated for the DEPARTMENT OF ENERGY by UT-BATTELLE, LLC
Oak Ridge, Tennessee

SNS Spallation Neutron Source

SCL1&2 QMCS CONTROL WIRING
BEAM LINE INTERFACE TB01

DRAWING NUMBER 109040000R8U8300W019 REV 0