DWG NO. 2267 REV

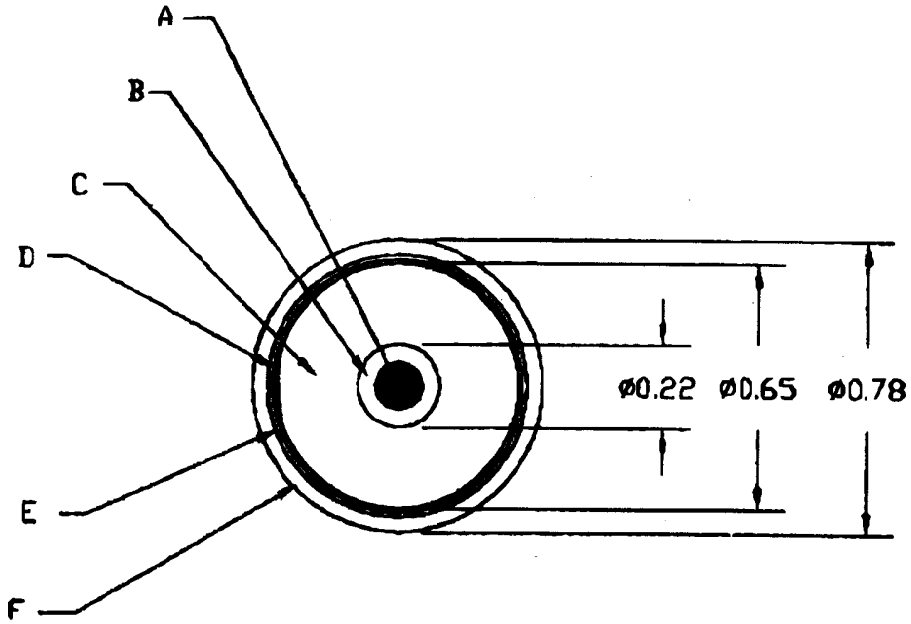


## LEGEND

A. #8 AWG (133 STRANDS) SPC.
B. SEMI CONDUCTIVE SILICONE
C. INSULATING SILICONE
D. SEMI CONDUCTIVE TAPE APPLIED OVER SEMI CONDUCTIVE INK.
E. BRAIDED SHIELD 9/30 AWG TC 24 CARRIER, 87% COVERAGE
F. 0.040 WALL, BLACK PVC, TEKNOR APEX 4855.

REVISIONS

| REV | ECO NUMBER | APPD | DATE |
|---|---|---|---|
| - | RELEASE DRAWING | | |
| | | | |
| | | | |
| | | | |
| | | | |
| | | | |

THIS DOCUMENT AND THE INFORMATION CONTAINED IN IT ARE THE PROPERTY OF DIELECTRIC SCIENCES, INC AND SHALL NOT BE REPRODUCED OR COPIED OR USED AS THE BASIS FOR THE MANUFACTURE OF APPARATUS WITHOUT PERMISSION.

UNLESS OTHERWISE SPECIFIED
DIMENSIONS ARE IN INCHES
TOLERANCE ON
DECIMALS .XX ±.01 .XXX ±.005
ANGLES ±
CONCENTRICITY .005 TIR
REMOVE BURRS & SHARP EDGES
ALL MACHINE SURFACES 125√

DRAWN D. ABDULKY DATE 03APR03
CHECKED DATE
APPROVED D. LEARY DATE 03APR03
MATERIAL
FINISH

**DIELECTRIC SCIENCES, INC**
CHELMSFORD, MASSACHUSETTS 01824

# CABLE, 100 KV DC

SIZE A FSCM NO. 50509 DWG NO. 2267 REV
SCALE SHEET OF

DIELECTRIC SCIENCES INC.

88 TURNPIKE ROAD, CHELMSFORD, MASSACHUSETTS 01824
TELEPHONE (978) 250-1507
FAX NO. (978) 250-1699

Date: April 3, 2003

Facsimile Transmittal Sheet

Please deliver the following sheets to:

Organization: Oak Ridge National Labs
Name: William Barnett
Department:
Pages: 2 (including cover)

FAX TO
DOUG
BUNCH
241-5381

From:

Name: David Leary
Telephone Number: 978-250-1507
Fax Number: 978-250-1699

Subject: Request For Quotation For High Voltage Cable 2267

In response to your request of 3Apr03, we are pleased to quote your requirements as follows for our cable 2267. We enclose for your review our internal drawing of cable 2267. Price and delivery information is as follows,

| Part Desc. | Part Number | Quantity | Unit Price | Delivery |
|---|---|---|---|---|
| h.v. cable | 2267 | 2000 ft | $10.59/ft | 18-20 weeks ARO |

F.O.B.: Chelmsford, MA
Payment Terms: net 30 days

The prices quoted above are for single shipment orders. Consider this quotation valid for 30 days. If you have any further questions, feel free to contact us. We await your reply.

Kind Regards,

DIELECTRIC SCIENCES, INC.

David J. Leary

A HIGH VOLTAGE TECHNOLOGY GROUP COMPANY

# TEKNOR APEX

Tuesday, March 25, 2003

## APEX 4855

Units: English

**Teknor Apex Company - *Polyvinyl Chloride, Flexible***

| | |
|---|---|
| **Product Characteristics** | |
| Material Status | • Commercial: Active |
| Availability | • North America |
| Test Standards Available | • ASTM |
| Features | • Oil Resistant<br>• Flame Retardant |
| Uses | • Insulation, Communication Wire • Jacketing, Industrial Cable<br>• Insulation, Appliance Wire • Insulation, Industrial Cable<br>• Insulation, Building Wire • Jacketing, Communication Wire<br>• Insulation, Transportation Wire |
| Wire Types | • UL Style 2532 • PLTC<br>• UL Style 1662 • TW<br>• UL Style 1083 • MTW<br>• UL Style 1082 • MP<br>• UL Style 1045 • THW<br>• UL Style 1032 • GPT<br>• AWM |
| Agency Ratings | • UL 1424 • NEC Article 760<br>• SAE J1128 • NEC Article 725<br>• NEC Article 770 |
| Forms | • Pellets |
| Processing Method | • Extrusion |

### Properties [1]

| Physical | Nominal Values (English) | Test Method |
|---|---|---|
| Density -Specific Gravity | 1.38 sp gr 23/23°C | ASTM D792 |

| Elastomers | Nominal Values (English) | Test Method |
|---|---|---|
| Tensile Stress @ 100% | 2170 psi | ASTM D412 |
| Tensile Str @ Break Elast | 2800 psi | ASTM D412 |
| Elongation @ Break Elast | 310 % | ASTM D412 |
| Tear Strength (Die B) | 600 pli | ASTM D624 |

| Hardness | Nominal Values (English) | Test Method |
|---|---|---|
| Durometer Hardness (C Scale (10 sec)) | 67 | ASTM D2240 |

| Thermal | Nominal Values (English) | Test Method |
|---|---|---|
| Brittle Temperature | -11.2 °F | ASTM D746 |

| Electrical | Nominal Values (English) | Test Method |
|---|---|---|
| Volume Resistivity | 6.0E+013 ohm-cm | ASTM D257 |
| Dielectric Constant (1000 Hz) | 5.900 | ASTM D150 |

| Ignition Characteristics | Nominal Values (English) | Test Method |
|---|---|---|
| Limiting Oxygen Index | 29 % | ASTM D2863 |

**Additional Properties**

UL Recognized Component as PVC 300 Hour Sunlight Resistant Jacket Compound, QMTT2.
UL Recognized Component as PVC Insulation Compound, QMTT2.
UL Recognized Component as PVC 720 Hour Sunlight Resistant Insulation and Jacket Compounds, QMTT2.
Subject 1424
Medium Voltage power & control tray cables
Metal clad cable type THW, TW
1/32 in wall, 90°C, 1000V

"APEX" 4855 data provided by IDES



Temperature Rating: 90 °C
Insulation Resistance, Mohm/1000 ft: 3900
UL Recognized Insulation: Yes
UL Sunlight Resistance Recognition: 720 hr
Heat Deformation, ASTM D1047, 1 hr, 121°C, T2/T1: 0.88
Ultimate Elongation Retained, UL 1581, Oven Aged, 7 days, 121°C: 80 %
Tensile Strength Retained, UL 1581, Oven Aged, 7 days, 121°C: 107 %

## Processing Information

| Extrusion Molding Parameters | Nominal Values (English) | Test Method |
|---|---|---|
| Melt Temperature | 375 °F | |

## Notes

1 Typical properties; not to be construed as specifications.

Copyright ©, 2003 IDES "The World's Source for Materials Information"

Teknor Apex Plastics
505 Central Avenue · Pawtucket, RI 02861
www.teknorapex.com · vinyl@teknorapex.com
401-725-8000 · 800-554-9892 · Fax: 401-729-0166

The information and recommendations contained in this bulletin are, to the best of our knowledge, accurate and reliable but no guarantee of their accuracy is made. All products are sold upon condition that purchasers shall make their own tests to determine the suitability of such products for their particular purposes and uses and purchasers assume all risks and liability for the results of use of the products, including use in accordance with seller's recommendations. Nothing in this bulletin constitutes permission or a recommendation to practice or use any invention covered by any patent owned by this company or by others. There is no warranty of merchantability and there are no other warranties for the products described.