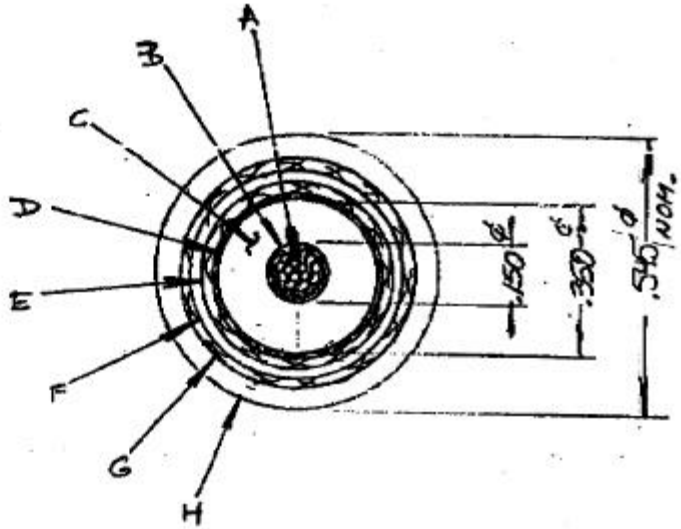

LEGEND

A. NO.12 AWG, 19 STRAND NO.25 AWG. S.P.C.

B. SEMICON SILICONE RUBBER, BLACK

C. INSULATION, SILICONE RUBBER, WHITE

D. SEMICON INK & TAPE

E. INNER SHIELD NO. 34 AWG T.C. 6/24 80% COVERAGE,

F. MYLAR TAPE & POLYETHYLENE .025 WALL

G. OUTER SHIELD NO. 34 AWG T.C 6/24

H. JACKET, PVC, BLACK .031 WALL

RATING : MAIN LAYER 20 KVAC RMS, 60 KVDC
INTER SHIELD 1KV

R2 REVISES OUTER JACKET THICKNESS

TOLERANCES (EXCEPT AS NOTED)	REVISIONS NO.	DATE	BY	DIELECTRIC SCIENCES, INC		
DECIMAL ±	1	11-4-96	WJL	HV TRIAXIAL CABLE, 12 AWG		
FRACTIONAL ±	2					
ANGULAR ±	3			DRAWN BY JHG	SCALE #	MATERIAL
	4			CHK'D	DATE 8 FEBC 88	DRAWING NO.
	5			TRACED	APP'D	2024 TVJ

TELEDYNE PC 18AE-01 -8½X11

1