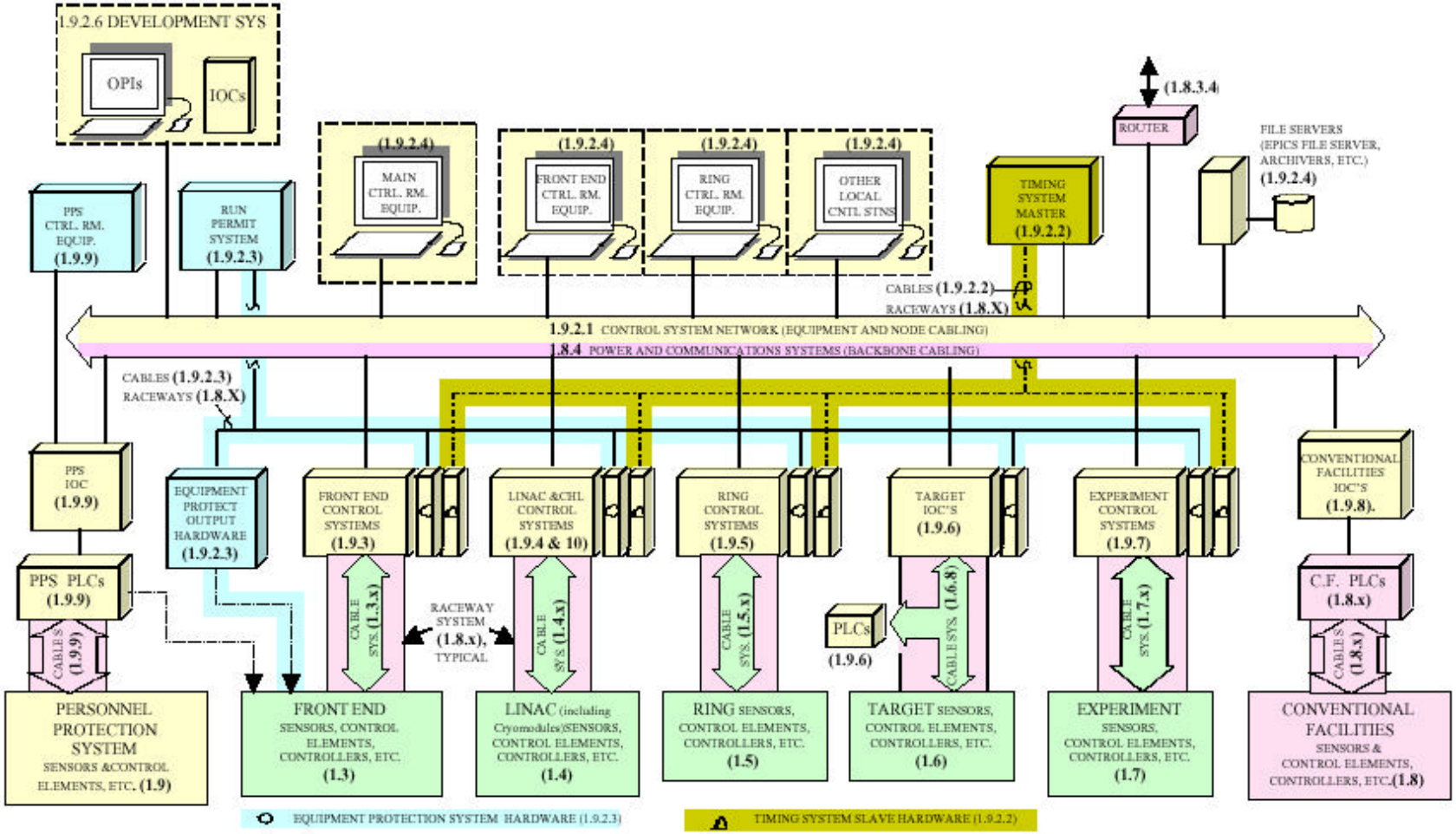

Fig. 1-1 Integrated Control System (ICS) System Diagram