Model 5600 Signature Series

-86C Upright ULT Freezer

Operating and Maintenance Manual 7035602 Rev. 2

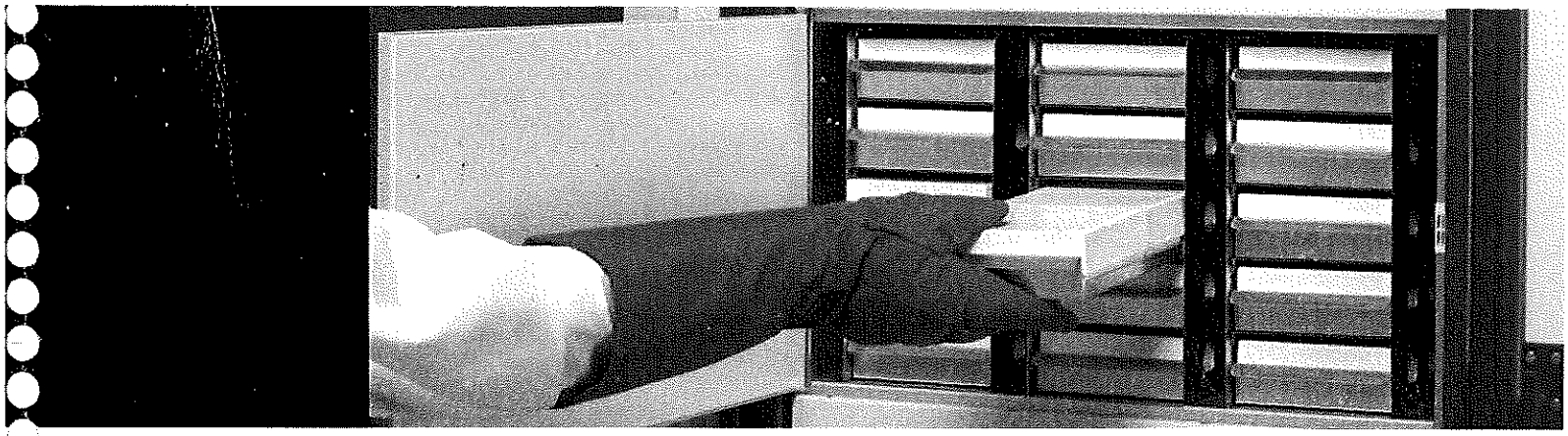

VWR™

Important installer and user information:

A redundant temperature sensing device has been included in this ULT freezer. This device is a type "T" thermocouple. For convenient access, the thermocouple (Figure 1-3) terminates in an interconnect jack (Figure 1-5) behind the base front cover. (May be located differently in chests. See Section 1.) It is strongly recommended that this thermocouple be attached to a redundant 24 hour 7 day monitoring system with alarm capabilities. Connecting the sensor to a monitoring and alarm system separate from the freezer provides the utmost in product safety, should the integral system fail.

Models covered in this manual

Model	Capacity in Cubic Feet	Voltage
5602	13	230
5603	13	120
5604	17	120
5605	17	230
5606	23	230
5607	28	230
5656	23	120

Packing List

Part Number	Description	Quantity
34040	Key Ring	1 (2 for double door units)
122005	Key	2 (4 for double door units)
380520	Neoprene Cap	2
510016	1/4-20 x 5-1/2" Bolt	2
402058	Vacu-Key	1
195763	Retaining Clip	1
370563	Remote Alarm Connector	1

MANUAL NUMBER 7035602

REV	ECR/ECN	DATE	DESCRIPTION	By
2	24767/FR-2004	7/8/08	Added Model 5607 28 cu ft	ccs
1	24567/FR-2000,24605/ FR-2000, 24417/SI-9962 24191	4/24/08	Clarified chamber probe and thermocouple callouts, Important info above, updated exploded parts drawings (-203) to current production (color chg), software updated - added 'Test BUS Operation' and Micro Board Failure Error	ccs
0	23831/FR-1943	6/18/07	Release 4 heat exchanger	ccs

Important Read this instruction manual. Failure to read, understand and follow the instructions in this manual may result in damage to the unit, injury to operating personnel, and poor equipment performance. ▲

Caution All internal adjustments and maintenance must be performed by qualified service personnel. ▲

Material in this manual is for information purposes only. The contents and the product it describes are subject to change without notice. VWR International makes no representations or warranties with respect to this manual. In no event shall VWR be held liable for any damages, direct or incidental, arising out of or related to the use of this manual.

©2007 VWR International. All rights reserved.

Important operating and/or maintenance instructions. Read the accompanying text carefully.

Potential electrical hazards. Only qualified persons should perform procedures associated with this symbol.

Equipment being maintained or serviced must be turned off and locked off to prevent possible injury.

Hot surface(s) present which may cause burns to unprotected skin, or to materials which may be damaged by elevated temperatures.

Marking of electrical and electronic equipment, which applies to electrical and electronic equipment falling under the Directive 2002/96/EC (WEEE) and the equipment that has been put on the market after 13 August 2005.

This product is required to comply with the European Union's Waste Electrical & Electronic Equipment (WEEE) Directive 2002/96/EC. It is marked with the WEEE symbol. Thermo Scientific has contracted with one or more recycling/disposal companies in each EU Member State European Country, and this product should be disposed of or recycled through them. Further information on Thermo's compliance with this directive, the recyclers in your country and information on Thermo products will be available at www.thermofisher.com.

- ✔ Always use the proper protective equipment (clothing, gloves, goggles, etc.)
- ✔ Always dissipate extreme cold or heat and wear protective clothing.
- ✔ Always follow good hygiene practices.
- ✔ Each individual is responsible for his or her own safety.

Do You Need Information or Assistance on VWR Scientific Products?

The VWR **Sales Group** can provide information on pricing and give you quotations. We can take your order and provide delivery information on major equipment items or make arrangements to have your local sales representative contact your. Our products are listed on the internet and we can be contacted through our Internet home page.

1-800-932-5000	VWR, Toll Free, US
http://www.vwrsp.com	Internet Worldwide Web Home page

The VWR **Product Service Group at Thermo** can supply technical information about proper setup, operation or troubleshooting of your equipment. We can fill your needs for replacement parts or provide you with on-site service. We can also provide you with a quotation on our Extended Maintenance Program for your products.

Whatever VWR or Thermo products you need or use, we will be happy to discuss your applications. If you are experiencing technical problems, working together, we will help you locate the problem and, chances are, correct it yourself...over the telephone without a service call.

When more extensive service is necessary, we will assist you with direct factory trained technicians or a qualified service organization for on-the-spot repair. If your service need is covered by the VWR Scientific warranty, we will arrange for the unit to be repaired at our expense and to your satisfaction.

Regardless of your needs, VWR support by Thermo's professional telephone technicians is available to assist you Monday through Friday from 8:00a.m. to 6:30 p.m. Eastern Time. Please call or fax us at:

1-740-373-4763	Direct
1-888-213-1790	Toll Free, U.S. and Canada
1-740-373-4189	FAX
Http://www.vwrsp.com	Internet Worldwide Web Home Page
services.controlenv@thermo.com	Service E-Mail Address

If you wish to write, our mailing address is:

VWR International Inc.
1310 Goshen Parkway
West Chester, Pennsylvania 19380

International customers, please contact your local distributor.

Table of Contents

Section 1 **Installation and Start-Up** **1-1**

Control Panel Keys, Displays & Indicators 1-3
Keypad Operation 1-4
Displays 1-5
Install the Freezer 1-5
  Choose the Location 1-5
  Install the Wall Bumpers 1-6
  Install the Shelves 1-6
  RS-232 Communications 1-6
  Remote Alarm Contacts and Analog Output 1-7
  Attach the Power Cord 1-8
  Connect Unit to Electrical Power 1-8
Freezer Start-Up 1-9
  Set the Operating Temperature 1-9
  Set the High Temperature Alarm 1-10
  Set the Low Temperature Alarm 1-10
  Access Code 1-11
Run Mode 1-11

Section 2 **Calibrate** **2-1**

Calibrate the Control Probe 2-1
Calibrate the Optional Sample Probe 2-2
  Temperature Stabilization Periods 2-2

Section 3 **Configuration** **3-1**

High Alarm Test 3-1
Low Alarm Test 3-1
System Battery Test 3-2
BUS Battery Test 3-2
Display Temperature 3-2
Clear High Stage Alarm 3-3
Set Access Code 3-3
RS485 Address 3-4
Back-Up System Type 3-4

Section 4 Alarms **4-1**
Wrong Power Alarm 4-2
High Stage System Failure 4-2
Voltage Compensation Alarm 4-2
Multiple Alarms 4-2
Micro Board Failure Alarm 4-2
Lost Communication Alarm 4-2
Probe Failure Alarms 4-3

Section 5 Maintenance **5-1**
Clean Air Filter 5-1
Clean the Condenser 5-1
Clean the Water-cooled Condenser 5-2
Clean in Place (CIP) 5-2
Defrost the Chamber 5-3
Clean the Door Gasket 5-3
Vacuum Relief Port 5-4
Vacuum Relief Port Maintenance 5-5
Replace the Battery 5-6
Prepare the Unit for Storage 5-6
Preventive Maintenance **5-7**

Section 6 Factory Installed Options **6-1**
Back-Up System 6-1
Install Vent Stack, Solenoid and Injection Assembly 6-2
Install the Temperature Probe 6-3
Connect the Probe/Solenoid Harness 6-4
BUS Operation and Maintenance 6-5
Chart Recorder 6-7
Change the Recorder Temperature Range 6-8
Calibrate the Recorder 6-9
Datalogger 6-9
Water-cooled Condenser 6-10
Five Inner Door Option 6-10

Section 7 Specifications **7-1**

Section 8 Exploded Parts Drawings **8-1**

Section 9 Refrigeration Schematics **9-1**

Appendix A Handling Liquid Nitrogen **A-1**
Handling Liquid Carbon Dioxide **A-4**

Section 1 Installation and Start-Up

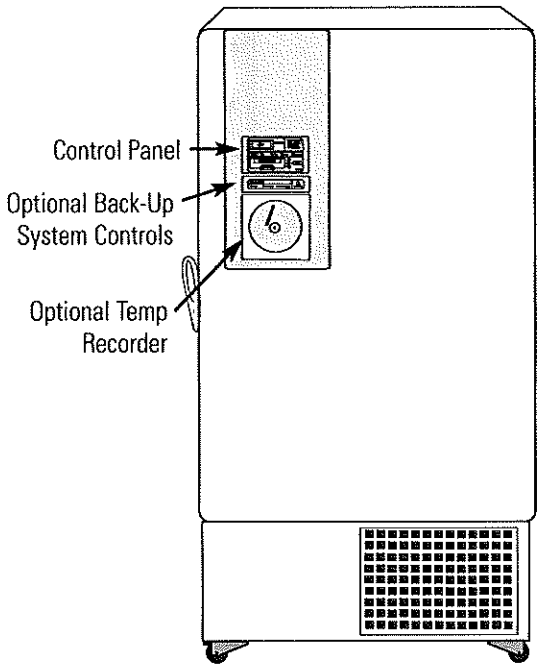

Figure 1-1. Front View

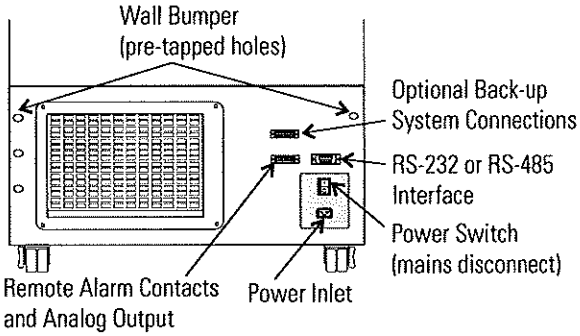

Figure 1-2. Rear View

Figure 1-1

- Control Panel - keypad, displays and indicators
- BUS (Optional Back Up System) panel
- Optional temperature recorder (7 day, one pen) or datalogger

Figure 1-2

- Remote alarm contacts and selectable analog output connection (0-1V, 4-20mA (default), 0-5V)
- Power inlet for power cord connection.
- Optional BUS connections for probe and solenoid
- RS-232 (default) or RS-485 interface
- Power switch (mains disconnect)

Figure 1-3

- Vacuum relief port - pressure equalization port
- Probe cover

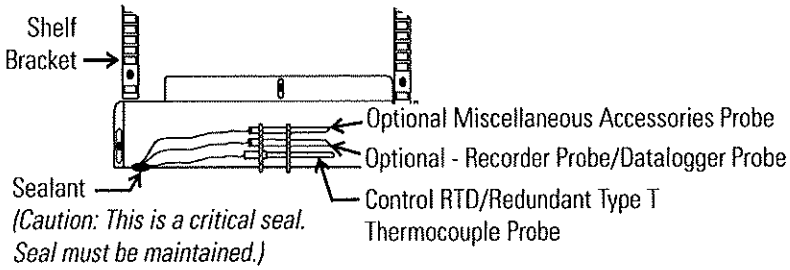

Figure 1-3. Chamber Probes

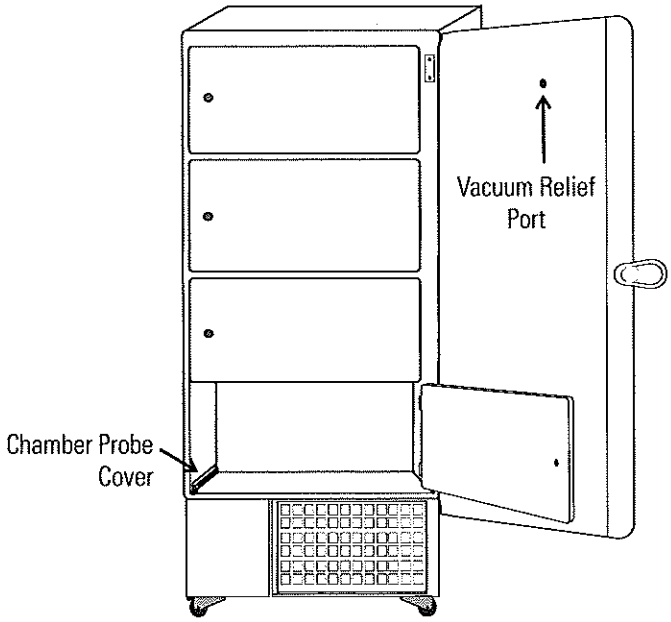

Figure 1-4. Vacuum Relief and Probe Cover Location

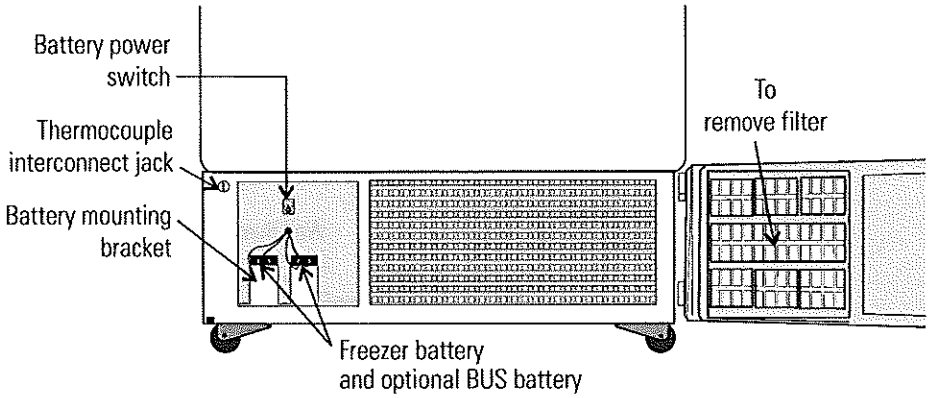

Figure 1-5. Battery(s) Location and Switch

Figure 1-4

- Probe cover houses control, optional recorder, datalogger, redundant alarm probes.

Figure 1-5

- Battery mounting bracket(s)
- Battery power switch (freezer and BUS)
- Freezer battery
- Optional BUS battery
- Freezer filter location

Control Panel Keys, Displays & Indicators

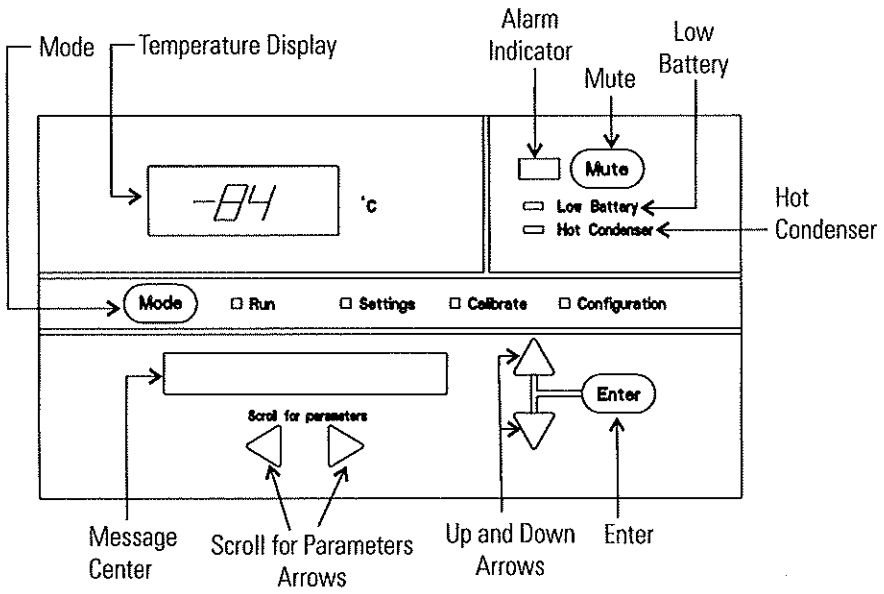

Figure 1-6. Control Panel

- Mode Select Switch - Used to select Run, Settings, Calibrate and System Configuration Modes.

  Mode Select Indicators -

  Run: Run Menu

  Settings: Set Points Menu

  Calibrate: Calibrate Menu

  Configuration: Configuration Menu
- Temperature Display - Displays temperature in degrees Celsius.
- Alarm Indicator - Light pulses on/off during an alarm condition of the cabinet.
- Mute - Silences the audible alarm.
- Low Battery - indicates a low battery condition of the freezer battery.
- Hot Condenser - indicates a hot condenser condition.
- Message Center - displays system status and alarms.
- Scroll for Parameters Arrows - moves the operator through the choices of the selected mode.
- Up and Down Arrows - Increases or decreases values, toggles between choices.
- Enter - Stores the value into memory.

Keypad Operation

The Model 5600 Series freezer has four basic modes which allow freezer setup: Run, Settings, Calibrate and Configuration.

Run is the default mode for the freezer during normal operation.

Settings is used to enter system set points for freezer operation.

Calibrate is used to calibrate various system parameters.

Configuration allows for custom setup of various options.

The chart below shows the selections under each of the modes.

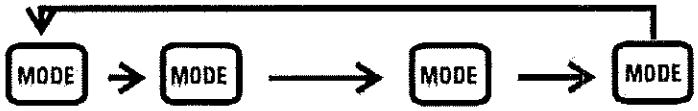

Run	Settings	Calibrate	Configuration
Default Mode SYSTEM OK	Control Set Point	Control Probe	High Alarm Test
LINE VOLTAGE	High Alarm Set Point	Optional Sample Probe	Low Alarm Test
COMPENSATED VOLTAGE	Low Alarm Set Point		System Battery Test
HSHX TEMPERATURE	Optional Back Up System SetPoint		BUS Battery Test
			Display Temperature
			Clear High Stage Alarm
			Set Access Code
			RS485 Address
			BUS type CO2 or LN2

Scroll for Parameters Arrows: Steps the operator through the parameters of SETTINGS, CALIBRATE and CONFIGURATION Modes. The right arrow goes to the next parameter, the left arrow returns to the previous parameter.

Up Arrow: Increases or toggles the parameter value that has been selected in the SETTINGS, CALIBRATE, and CONFIGURATION Modes.

Enter: Must press Enter key to save to memory any changed values.

Down Arrow: Decreases or toggles the parameter values that have been selected in the SETTINGS, CALIBRATE and CONFIGURATION Modes.

Mute Key: Press to silence the audible alarm. See Section 4 for alarm ringback times.

Displays

Message Center: Displays the system status (Mode) at all times. Displays SYSTEM OK during normal operation, or alarm messages if the system detects an alarm condition. See Alarms, Section 4.

Caution If tipped more than 45°, allow the unit to set upright for 24 hours before start up. ▲

Install the Freezer

To remove the freezer from the pallet, use the 7/16" wrench to remove all the bolts securing the shipping bracket to the pallet.

Remove the shipping bracket. Remove the ramp boards from the pallet and place the slotted end over the ramp brackets on the pallet. The support blocks on the ramps will be facing down. Before moving the freezer, make sure the casters are unlocked and moving freely. Align the caster with the ramp boards. Use adequate personnel to roll the freezer off the pallet.

The freezer can be easily pushed to the desired approved location, described below. If necessary, the doors and lower front panel may be opened to move the unit through tight openings. When the freezer is in position, set the front caster brakes.

Caution The freezer must not be moved with the product load inside. ▲

Choose the Location

Locate the freezer on a firm, level surface in an area with an ambient temperature between 18°C and 32°C. Provide ample room to reach the mains disconnect switch (power switch) located on the rear of the freezer.

Caution For proper ventilation and airflow, a minimum clearance of 5" at the rear and top, and a clearance of 8" on the side of the freezer is required. Allow adequate space in front of the freezer for door opening. ▲

Install the Wall Bumpers

The parts bag, located inside the cabinet, contains the following parts.

Quantity	Stock #	Description	Purpose
2	510016	1/4-20x5-1/2" Bolt	Wall Bumper
2	380520	Neoprene Cap	Cap Protector

Install the bolts into the pre-tapped holes on the back of the compressor section. Install a neoprene cap on each bolt. Refer to Figure 1-2 for the location of the pre-tapped holes.

Install the Shelves

Install the shelf clips into the shelf pilasters (front and back) at the desired shelf level. Install the shelves in the cabinet onto the clips.

Note On units having the optional 5 inner door option, refer to the instructions accompanying the inner door kit. ▲

RS-232 Communications

The Model 5600 Series freezer has a data communications interface. The factory default setting is RS-232.

The wiring identification for the interface is shown in Figure 1-7. One nine pin, sub "D" style connector is located on the back of the freezer. See Figure 1-2 for the location of the connector on the freezer.

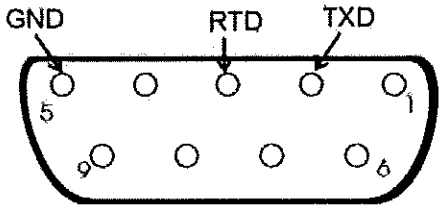

Figure 1-7. Wiring Identification

The freezer transmits temperature information every 60 minutes. A standard DB9 serial extension cable can be used to connect the freezer to a serial device. Some serial devices may require a null modem adapter.

Data format:

Baud 1200
Data bits . . . . . .8 (7 bit ASCII with leading zero)
Start bits 1
Stop bits 2
Parity . . . . . .none

RS-232 Communications (continued)

The data transfer sequence is transmitted in the following format. X refers to numerical temperature data.

(NUL) (-) XXX (SP) C (SP) (OVERTEMP) (SP) (LF) (CR) (EOT) (SP) (UNDER TEMP)

The words "OVER TEMP" or "UNDER TEMP" are transmitted when an alarm condition exists along with the temperature. If no alarm condition exists, spaces will be sent. A total of 20 characters will be sent.

SP - Space

LF - Line feed

CR - Carriage return

EOT - End of text (4)

NUL - Null character (00)

Remote Alarm Contacts and Analog Output

The Model 5600 Series freezer has remote alarm contacts and analog output. See Figure 1-2 for the location of the remote alarm contacts. The remote alarm connector is located in the parts bag provided with the manual. It must be installed if connecting the freezer to an alarm system. After installing the wiring from the alarm system to the connector, install the connector to the freezer microboard and secure with the two screws provided. The remote alarm provides a NO (normally open) output, a NC (normally closed) output and COM (common). The contacts will trip on a power outage, high temperature alarm or low temperature alarm. Figure 1-8 shows the remote contacts in alarm state.

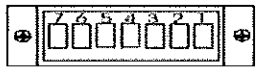

REMOTE CONTACTS/ANALOG OUTPUT
PIN# 1 Analog Output +
PIN# 2 Analog Output -
PIN# 3 Not Connected
PIN# 4 Not Connected
PIN# 5 Normally Closed
PIN# 6 Common
PIN# 7 Normally L
CONTACT RATING: 1A @ 30V

IMPORTANT USER INFORMATION

Caution! Stored product should be protected by a redundant 24 hour/day monitoring system with alarm capability. An interconnect jack and thermocouple are installed for centralized monitoring, should on-board system fail.

Figure 1-8. Remote Alarm Contact Pins

The analog output function allows the freezer to output signals representing the temperature of the freezer cabinet. The factory default setting is 4-20 mA. Refer to Figure 1-9 for output specifications.

	4-20 mA	0-1V	0-5V
Temperature	-100 to +50°C	-100 to +50°C	-100 to +50°C

Figure 1-9. Specifications

Attach the Power Cord

Insert the power cord into the power inlet module. Place the retaining bracket (P/N 195763) over the connector. Tighten retaining screws to secure.

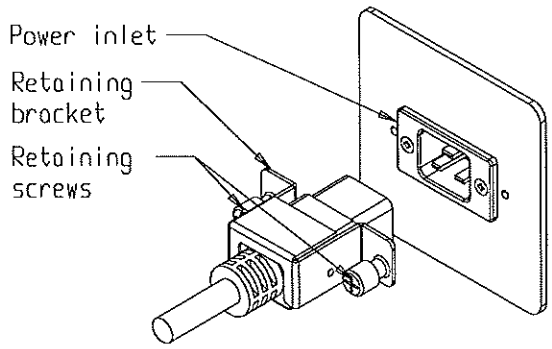

Figure 1-10. Power Cord Connection

Connect Unit to Electrical Power

Caution See the serial tag on the side of the unit for electrical specifications or refer to the electrical schematics in this manual. ▲

The freezer should be operated on a dedicated grounded service. Check the voltage rating on the serial tag of the unit and compare it with the outlet voltage. Then, with the power switch turned off, plug the line cord into the wall outlet.

First turn on the freezer power switch. Then open the lower front door by grasping the bottom left corner. Locate the battery switch (Figure 1-5) and turn it to Standby mode (⏻). During initial freezer start-up, the system battery may require charging and the Low Battery message may appear in message center.

Caution Ensure the battery switch is turned to Standby mode (⏻). The rechargeable batteries require 36 hours to charge at initial start-up. A "Low Battery" alarm may occur until the batteries are fully charged. Should a power failure occur during the initial start-up period, the electronics will have limited operation. ▲

Freezer Start-Up

With the freezer properly installed and connected to power, system setpoints can be entered. The following setpoints can be entered in Settings mode: Control temperature, high temperature alarm setpoint, low temperature alarm setpoint, and (optional) BUS setpoint. Default settings are shown in the table below.

Control Set Point	-80°C
High Temperature Alarm	-70°C
Low Temperature Alarm	-90°C
Optional BUS Set Point	-60°C

Caution If the setpoint is changed and the low temperature and high temperature alarms are set 10° from the set point, the alarm setpoints will be adjusted automatically to maintain a distance of at least 10° from setpoint. ▲

Set the Operating Temperature

All Model 5600 Series freezers have an operating temperature range of -50°C to -86°C, depending on ambient temperature. The freezer is shipped from the factory with a temperature set point of -80°C. To change the operating temperature setpoint:

1. Press the Mode key until the Settings indicator lights.
2. Press the right arrow until "SET PT = -XX" is displayed in the message center.
3. Press the up/down arrow key until the desired temperature set point is displayed.
4. Press Enter to save the set point.
5. Press the Mode key until the Run indicator lights for Run mode or press the right/left arrow keys to go to next/previous parameter.

If no control keys are pressed, the freezer will automatically return to RUN mode after 5 minutes.

Set the High Temperature Alarm

The high temperature alarm will activate an audible/visual warning when the freezer chamber temperature has reached or exceeded the high temperature alarm set point. To set the high temperature alarm set point:

1. Press the Mode key until the Set indicator lights.
2. Press the right arrow until "HI ALM = -XX" is displayed in the message center.
3. Press the up or down arrow key until the desired high temperature alarm set point is displayed.
4. Press Enter to save the setting.
5. Press the Mode key until the Run indicator lights or press the right or left arrow to go to the next or previous parameter.

If no control keys are pressed, the freezer will automatically return to RUN mode after 5 minutes.

Caution The high alarm set point must be set at least 5°C from the control set point. At initial start-up, the high temperature alarm is disabled until the cabinet reaches set point, or 12 hours elapse. ▲

Set the Low Temperature Alarm

The low temperature alarm will activate an audible/visual warning when the freezer chamber temperature has reached or decreased below the low temperature alarm set point. To set the low temperature alarm set point:

1. Press the Mode key until the Settings indicator lights.
2. Press the right arrow until "LO ALM = -XX" is displayed in the message center.
3. Press the up or down arrow key until the desired low temperature alarm set point is displayed.
4. Press Enter to save the setting.
5. Press the Mode key until the Run indicator lights or press the right or left arrow to go to the next or previous parameter.

If no control keys are pressed, the freezer will automatically return to RUN mode after 5 minutes.

Note The low alarm set point must be set at least 5°C from the control set point. ▲

Access Code

An access code of 000 is required to access the Settings, Calibrate or Configuration modes. If the access code is not set at the default '000', a code must be entered to leave RUN mode. See Section 3 for instructions on modifying the access code.

Run Mode

Run is the default mode for the freezer. The run mode will display the cabinet temperature on the temperature display and 'SYSTEM OK' on the message center under normal operating conditions. In addition, this mode allows display of the following information:

LINE VOLTAGE

COMPENSATED VOLTAGE

HSHX TEMPERATURE (heat exchanger temperature)

This information is scrolled individually by pressing the right arrow key. In each case, the message center returns to SYSTEM OK in 10 seconds if no keys are pressed.

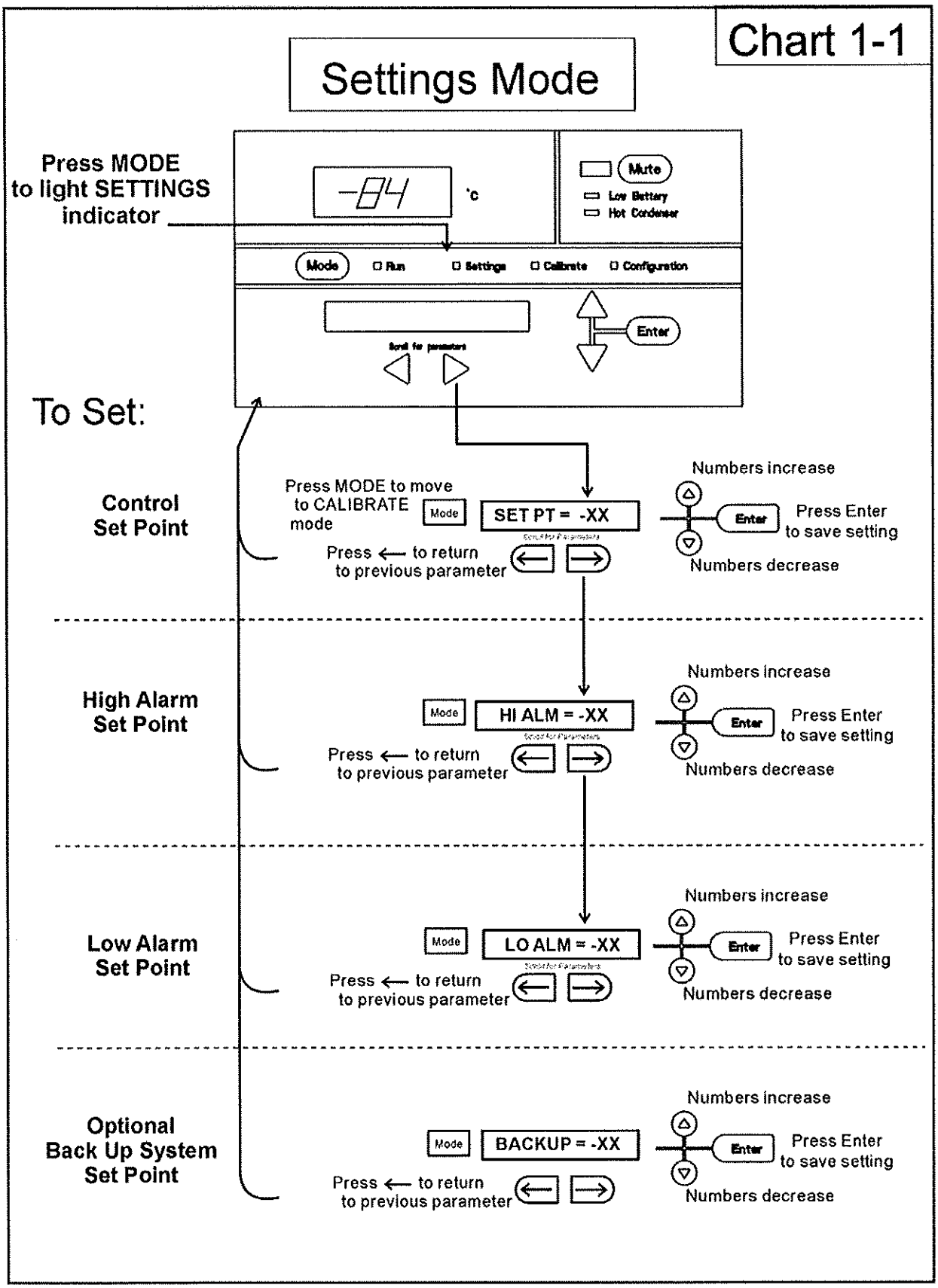
Chart 1-1
Settings Mode
Press MODE to light SETTINGS indicator
-84
°C
Mute
Low Battery
Hot Condenser
Mode
Run
Settings
Calibrate
Configuration
Enter
Scroll for parameters
To Set:
Control Set Point
Press MODE to move to CALIBRATE mode
Mode
SET PT = -XX
Press ← to return to previous parameter
Numbers increase
Enter
Press Enter to save setting
Numbers decrease
High Alarm Set Point
Mode
HI ALM = -XX
Press ← to return to previous parameter
Numbers increase
Enter
Press Enter to save setting
Numbers decrease
Low Alarm Set Point
Mode
LO ALM = -XX
Press ← to return to previous parameter
Numbers increase
Enter
Press Enter to save setting
Numbers decrease
Optional Back Up System Set Point
Mode
BACKUP = -XX
Press ← to return to previous parameter
Numbers increase
Enter
Press Enter to save setting
Numbers decrease

Section 2 Calibrate

Once the freezer has stabilized, the control or sample probe may need to be calibrated. Calibration frequency is dependent on use, ambient conditions and accuracy required. A good laboratory practice would require at least an annual calibration check. On new installations, all parameters should be checked after the stabilization period.

Caution Before making any calibration or adjustments to the unit, it is imperative that all reference instruments be properly calibrated. ▲

Calibrate the Control Probe

Plug a type T thermocouple reader into the receptacle located inside the lower door (see Figure 1-5). Compare the control temperature set point to the temperature of the measuring device. See Chart 2-1 at the end of this section for more detail.

1. Press the Mode key until the Calibrate indicator lights.
2. Press the right arrow until "CONT T = -XX.X" appears in the message center.
3. Press up/down arrow to match the display to calibrated instrument.
4. Press Enter to store calibration.
5. Press the Mode key to return to Run or the right/left arrow to go to next/previous parameter.

Calibrate the Optional Sample Probe

For freezers with the optional sample probe, place the calibrated instrument in the center of the sample bottle. The bottle should contain an appropriate medium and the measuring instrument should be centered in the bottle.

1. Press the Mode key until the Calibrate indicator lights.
2. Press the right arrow until "SAMP T = -XX.X" appears in the message center.
3. Press up/down arrow to match display to calibrated instrument.
4. Press Enter to store calibration.
5. Press the Mode key to return to Run or the right/left arrow to go to next/previous parameter.

See Chart 2-1 for calibration process functions.

Temperature Stabilization Periods

Temperature Stabilization Periods

Startup - Allow 12 hours for the temperature in the cabinet to stabilize before proceeding.

Already Operating - Allow at least 2 hours after the display reaches set point for temperature to stabilize before proceeding.

Caution During calibration, the temperature display is not available. ▲

If no keys are pressed for approximately five minutes while in calibration mode, the system will reset to Run mode.

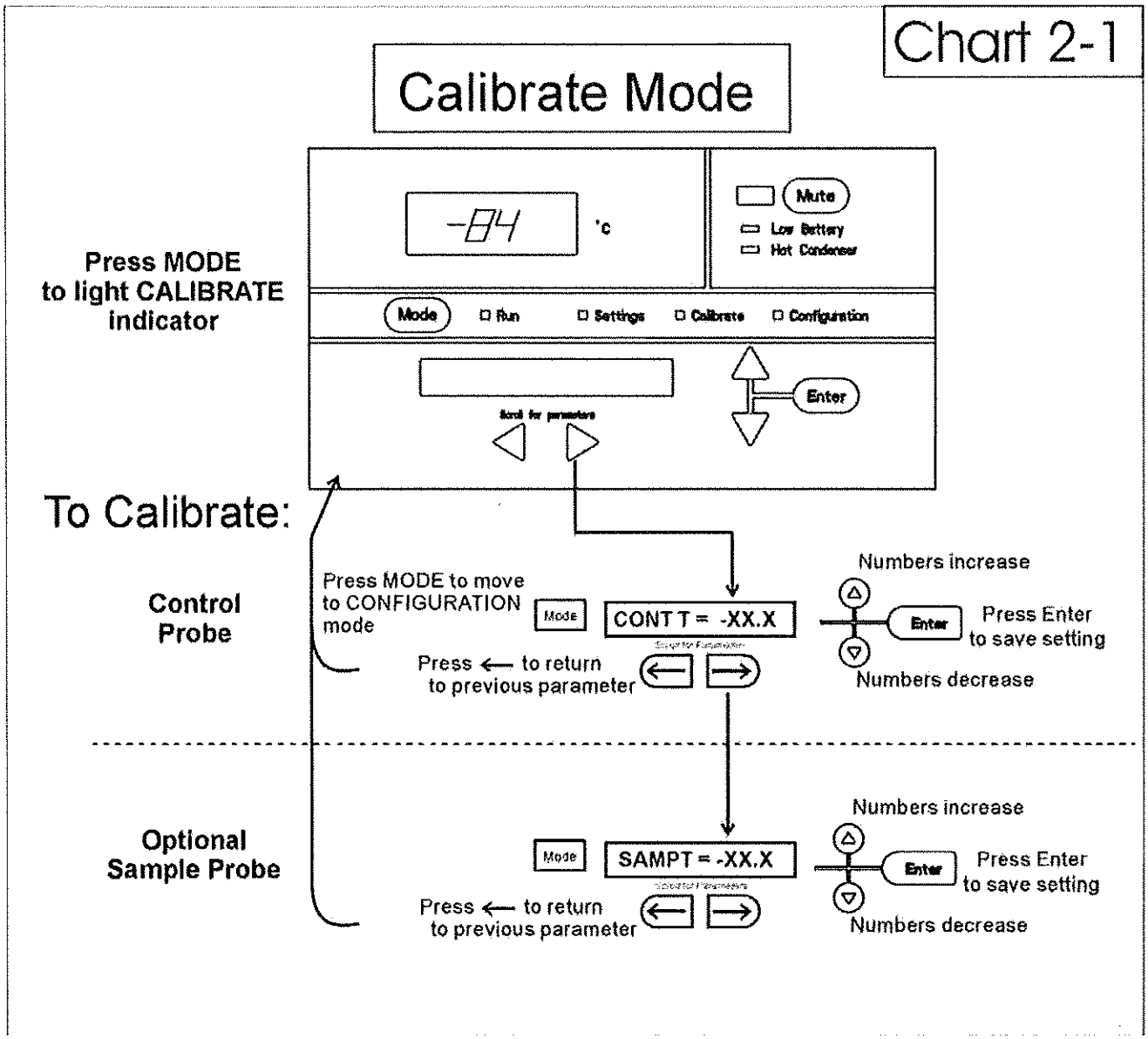
Chart 2-1
Calibrate Mode
-84
°C
Mute
Low Battery
Hot Condenser
Mode
Run
Settings
Calibrate
Configuration
Enter
Press MODE
to light CALIBRATE
indicator
To Calibrate:
Control
Probe
Press MODE to move
to CONFIGURATION
mode
Mode
CONT T = -XX.X
Numbers increase
Enter
Press Enter
to save setting
Numbers decrease
Press ← to return
to previous parameter
Optional
Sample Probe
Mode
SAMPT = -XX.X
Numbers increase
Enter
Press Enter
to save setting
Numbers decrease
Press ← to return
to previous parameter

Section 3 Configuration

The Configuration Mode is used for testing and custom setup of the freezer. The configuration functions listed and described below may not be necessary in all applications, but are available if needed. See Chart 3-1 for more detail.

High Alarm Test

The high alarm test is used to verify the high alarm will activate, should the freezer temperature equal or exceed the high alarm set point.

1. Press the Mode key until the Configuration indicator lights.
2. Press the right arrow until HI ALRM TEST is displayed in the message center.
3. Press Enter to initiate the test.

The temperature on the display will begin to increase until the high alarm set point has been reached. The audible alarm will sound and the alarm indicator will flash. Press the Mute key to silence the alarm.

Low Alarm Test

The low alarm test is used to verify the low alarm will activate, should the freezer temperature equal or become less than the low alarm set point.

1. Press the Mode key until the Configuration indicator lights.
2. Press the right arrow until LO ALRM TEST is displayed in the message center.
3. Press Enter to initiate the test.

The temperature on the display will begin to decrease until the low alarm set point has been reached. The audible alarm will sound and the alarm indicator will flash. Press the Mute key to silence the alarm.

System Battery Test

To test the charge of the freezer battery:

1. Press the Mode key until the Configuration indicator lights.
2. Press the right arrow until SYS BAT TEST is displayed in the message center.
3. Press Enter to initiate the test.

TESTING BATT displays during the testing period. Upon completion of the test, the message center displays BATT GOOD or BATT FAIL. When a test is failed, the audible alarm sounds, the alarm indicator and the Low Battery indicator light. Press the Mute key and the alarm indicator goes out. The Low Battery light stays on until a future battery test is performed and passed.

BUS Battery Test

To test the charge of the BUS battery:

1. Press the Mode key until the Configuration indicator lights.
2. Press the right arrow until BUS BAT TEST is displayed in the message center.
3. Press Enter to initiate the test.

TESTING BATT displays during the testing period. Upon completion of the test, the message center displays BBAT GOOD or BBAT FAIL. When a test is failed, the audible alarm sounds, the alarm indicator and the Low Battery indicator lights. Press the Mute key. The audible alarm and alarm indicator go off. The Low Battery light stays on. If this test fails, it is recommended to replace the BUS battery.

Display Temperature

This function, only available on freezers with the optional sample probe, allows the user to select which temperature is displayed in the temperature display window. The options are CONTROL or SAMPLE.

1. Press the Mode key until the Configuration indicator lights.
2. Press the right arrow until DISP CONTROL or DISP SAMPLE is displayed in the message center.
3. Press up/down arrow to toggle between the two display selections.
4. Press Enter to save.

If control probe is selected, the temperature display will be on continuously. If sample probe is selected, the temperature display will be preceded with a letter 'S'.

Clear High Stage Alarm

Should a high stage alarm occurred, it may become necessary to the clear the alarm condition after the condition has been corrected.

1. Press the Mode key until the Configuration indicator lights.
2. Press the right arrow until CLR HS ALARM is displayed in the message center.
3. Press Enter to clear the alarm.

Set Access Code

To set the Access Code:

1. Press the Mode key until the Configuration indicator lights.
2. Press the right arrow until "SET ACC CODE" is displayed in the message center.
3. Press Enter.
4. The message center will display ACC CODE = 000. Press the up or down arrow key until the desired access code is displayed (000 - 999). Press the left or right arrow key to select digit 1, 2, 3.

Note The left and right arrow keys are used to move from the first through the third digits within the access code. ▲

5. Press Enter to save the setting
6. Press the Mode key until the Run indicator lights. A three digit Access Code can be entered to avoid unauthorized personnel from changing the set points, calibration, or configuration. A setting of 000 will bypass the access code. The factory setting is 000.

RS485 Address

The freezer will need to have a unique identification address for data communications. This address is set through the Configuration mode.

1. Press the Mode key until the Configuration indicator lights.
2. Press the right arrow until RS485ADDR is displayed in the message center.
3. Press Enter. The message center will display 485 ADDR XX.
4. Press up or down arrow to select the appropriate address for the freezer (1 - 24).
5. Press Enter to save.

Back-Up System Type

This function, which is only available on freezers with the optional BUS (back up system), allows the user to select which type of gas is injected into the freezer chamber. The options are CO2 and LN2.

1. Press the Mode key until the Configuration indicator lights.
2. Press the right arrow until BUS TYPE CO2 or BUS TYPE LN2 is displayed in the message center.
3. Press up/down arrow to toggle between the two display selections.
4. Press Enter to save.

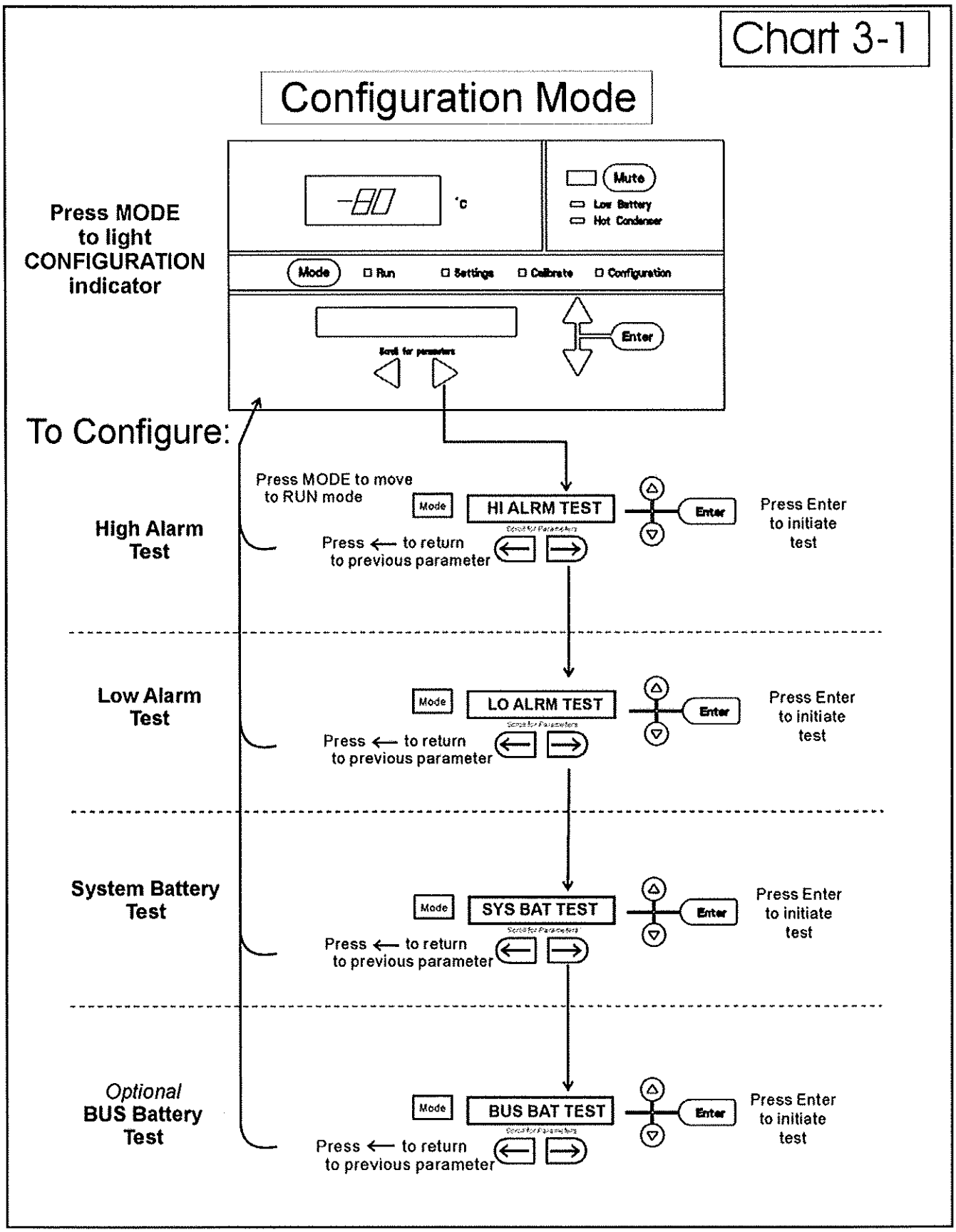
Chart 3-1
Configuration Mode
Press MODE to light CONFIGURATION indicator
°C
Mute
Low Battery
Hot Condenser
Mode
Run
Settings
Calibrate
Configuration
Enter
Scroll for parameters
To Configure:
Press MODE to move to RUN mode
High Alarm Test
Mode
HI ALRM TEST
Enter
Press Enter to initiate test
Press ← to return to previous parameter
Low Alarm Test
LO ALRM TEST
System Battery Test
SYS BAT TEST
Optional BUS Battery Test
BUS BAT TEST

Configuration Mode, Chart 3-1, Page 2 of 2

refer to previous page

To Configure:

Display Temperature

Mode | DISP CONTROL | Enter

Scroll for Parameters

Press ← to return to previous parameter

CONTROL probe
Press Enter to save the setting
SAMPLE probe

Clear High Stage Alarm

Mode | CLR HS ALARM | Enter

Scroll for Parameters

Press ← to return to previous parameter

Press Enter to clear the alarm condition

Access Code

Mode | SET ACC CODE XXX | Enter

Scroll for Parameters

Press Mode to exit.
Press Enter to change.
Press right or left arrow to move to next digit.

Numbers increase
Press Enter to save the setting
Numbers decrease

RS-485 Address *(if configured)*

Mode | RS485 ADDR | Enter

Scroll for Parameters

Press ← to return to previous parameter.
Press Enter to to change the address.

Scroll through the addresses 1 - 24
Press Enter to save the setting

Optional **Back Up System Type**

Mode | BUS TYPE CO2 | Enter

Scroll for Parameters

Press ← to return to previous parameter

Type CO2
Press Enter to save the setting
Type LN2

Section 4 Alarms

The Model 5600 Series freezer alarm system is shown in the table below. When an alarm is active, the message appears in the LED message center. Press the Mute key to silence the audible alarm for the ringback period. The visual alarm will continue until the freezer returns to a normal condition. The alarms are momentary alarms only. When an alarm condition occurs and then returns to normal, the freezer automatically clears the alarm condition and the message center.

Description	Message	Delay	Ringback	Relay
No alarm condition exists	SYSTEM OK	----	----	----
Power Failure	POWER FAIL	1 min.	15 min.	Yes
High Temperature Alarm	TEMP IS HIGH	1 min.	15 min.	Yes
Low Temperature Alarm	TEMP IS LOW	1 min.	15 min.	Yes
Door Ajar	DOOR IS OPEN	1 min.	15 min.	No
Low Battery*	LOW BATTERY	1 min.	12 hours	No
Control Probe Failure	PROBE 1 FAIL	1 min.	15 min.	No
Heat Exchanger Probe Failure	PROBE 2 FAIL	1 min.	15 min.	No
Condenser Probe - see 4.2	PROBE 3 FAIL	1 min.	15 min.	No
Sample Probe Failure (optional)	PROBE 4 FAIL	1 min.	15 min.	No
High Stage System Failure	HS SYST FAIL	1 min.	15 min.	No
Condenser Hot Condition	HOT CONDENSR	1 min.	none	No
Wrong Power	WRONG POWER	0 min.	none	No
Voltage Compensation	VCOMPEN FAIL	0 min.	15 min.	No
Micro Board Failure	MICRO FAIL	0 min.	15 min.	No

All alarm delays and ringback times are ±30 seconds.

** The automatic battery test runs 12 hours after initial start-up, then every 12 hours thereafter. A user initiated battery test can be performed from the Configuration menu. See Section 3.*

Wrong Power Alarm

If a 230V freezer is connected to a 120V power source or a 120V freezer is connected to a 230V power source, the electronics will detect that an incorrect power source has been connected to the freezer. Under this condition, the fans and compressors will not turn on and an audible and visual alarm will occur along with the "WRONG POWER" message in the LED message center.

The "WRONG POWER" alarm may also occur if the battery switch is turned to Standby mode (⏻) prior to applying power to the freezer. The audible and visual alarms will remain until the freezer is connected to the correct power source.

High Stage System Failure

This condition is created when the high stage compressor and fans run for 30 minutes and are not capable of cooling the interstage heat exchanger to the proper temperature. Under this condition, the high stage compressor and fans will turn off after 30 minutes, and an audible and visual alarm will occur along with the "HS SYST FAIL" message in the LED message center.

Voltage Compensation Alarm

If the freezer is compensating for high or low line voltage, the system will measure the compensated AC voltage. If the voltage is incorrect, the unit will stop attempting to compensate, and the compressors will run on direct line voltage. Under this condition, the message center will display "VCOMPEN FAIL".

Multiple Alarms

When multiple alarm conditions occur, active messages are displayed in the message center one at a time, updating at 5 second intervals. Pressing Mute during multiple alarms causes all active alarms to be muted and to ring back in 15 minutes.

Micro Board Failure Alarm

An internal communications failure has occurred with the micro board. During this alarm, the compressor(s) attempt to run continuously. However, with this type of failure, freezer operation becomes undependable.

Lost Communication Alarm

Communication between the micro board and the display board has been lost. Under this condition, the visual alarm LED flashes along with dashes (----) in the temperature display. In addition, 'LOST COMM' flashes in the message center. Contact Technical Services.

Probe Failure Alarms

The microprocessor in Model 5600 Series freezers continually scans all probes including the control probe, heat exchanger probe, condenser probe and optional sample probe to ensure that they are operating properly. Should an error be detected, the "PROBE # FAIL" alarm will occur as described in 4.1 above. If an error is detected with the control probe (PROBE 1 FAIL), the high and low stage compressors will run continuously. As a result, the cabinet temperature will decrease until it reaches the lowest temperature that the refrigeration system can maintain. If an error is detected with the heat exchanger probe (PROBE 2 FAIL), the freezer will cycle properly at its temperature set point using a 5 minute step start between the high and low stage compressors. If an error is detected with the condenser probe (PROBE 3 FAIL) or optional sample probe (PROBE 4 FAIL), there is no impact on the performance of the freezer. However, the hot condenser alarm may also occur when the condenser probe fails. Contact the VWR Service Department or your local distributor.

Section 5 Maintenance

Warning Avoid the excessive use of water around the control area due to the risk of electrical shock. Damage to the controls may also result. ▲

Wipe down the freezer exterior using soap and water and a general use laboratory disinfectant. Rinse thoroughly with clean water and dry with a soft cloth.

Clean Air Filter

Clean the air filter a minimum of four times per year.*

1. Open the front lower door by grasping the bottom left corner.
2. Locate the grille on the door. See Figure 1-5. Grasp the middle of the grille material and gently pull out to remove.
3. Wash the filter material using water and a mild detergent.
4. Dry by pressing between two towels.
5. Install the filter back into the grille and attach the grille.

** The clean filter alarm occurs every three months as a reminder to clean the air filter. Depending upon environmental conditions, the filter may need to be cleaned or replaced more frequently. If the filter becomes torn or excessively dirty, a replacement can be purchased from VWR. Order part number 760203.*

Clean the Condenser

Clean the condenser a minimum of once a year.*

1. Open the front lower door by grasping the bottom left corner. See Figure 1-5.
2. Using a vacuum cleaner, exercising care to not damage the condenser fins, clean the condenser.

** Depending upon environmental conditions, the condenser may need to be cleaned more frequently.*

Clean the Water-cooled Condenser

The water-cooled condenser can be cleaned-in-place by using the CIP procedure. Cleaning solutions can be used, depending on type of deposits or build-up to be removed.

Caution Do not use liquids that are corrosive to stainless steel or the brazing material (copper or nickel). ▲

Clean in Place (CIP)

1. Disconnect the unit from the water supply.
2. Drain the unit.
3. Rinse with fresh water and drain the unit again.
4. Fill with fresh water.
5. Add cleaning agent (solution and concentration dependent on deposits or build-up).
6. Circulate cleaning solution (if feasible).
7. Drain the cleaning solution.
8. Add and circulate a passivating liquid for corrosion inhibition of plate surfaces.
9. Drain this liquid.
10. Rinse with fresh water and drain.
11. Reconnect the water supply and fill the unit.
12. Return to service.

Defrost the Chamber

1. Remove all product and place it in another freezer.
2. Turn the unit off and disconnect it from the power source.
3. Turn off the battery switch (O). See Figure 5-8.
4. Open all of the doors and place towels on the chamber floor.
5. Allow the frost to melt and become loose.
6. Remove the frost with a soft cloth.
7. After defrosting is complete, clean the interior with a non-chloride detergent. Rinse thoroughly with clean water and dry with a soft cloth.
8. Plug unit in and turn power switch on.
9. Turn the battery power switch to Standby mode (⏻)
10. Allow the freezer to operate empty overnight before reloading the product.

Clean the Door Gasket

Clean the door gasket a monimum of once a month.*

Using a soft cloth, remove any frost build-up from the gasket and door(s). The Clean Gasket alarm occurs every three months as a reminder to remove frost build-up from the gasket and door(s). Press the Silence key to disable the audible alarm.

**The door gasket may need to be cleaned more frequently if dirt or excessive frost build-up prevents the door from closing properly.*

Vacuum Relief Port

The exterior door gasket provides an excellent seal that protects product, provides an energy efficient thermal barrier to keep cold air in and room temperature air out, and reduces frost build-up on the inner doors.

Because the door gasket seals so well, a vacuum can be created after a door opening. Warm air enters the cabinet, cools and contracts, creating a vacuum that pulls the door in tightly against the seal.

To equalize the pressure inside the cabinet after a door opening requires 1.5-3.0 cu.ft. of ambient air to be drawn into the cabinet. The amount of air required to equalize the pressure varies depending on the cabinet size, cabinet temperature, duration of door opening, inventory volume and the temperature/humidity of the ambient air. This unit is designed with a "vacuum relief port" that allows the pressure to be equalized.

The time required to draw 1.5-3.0 cu.ft. of air into the cabinet depends on two. factors,

a) the size and number of paths available for the air to enter the cabinet, and

b) the pressure difference between the internal cabinet and the ambient room.

Cabinets with the vacuum relief port operating normally, (i.e. vacuum relief port is not iced over) will require a minimum of 30 seconds up to a maximim of 120 seconds for the cabinet to equalize. This is also a good indication that the exterior door is well sealed.

The vacuum relief port requires routine maintenance. It will ice over unless preventive measures are taken. If the vacuum relief port becomes iced over, the freezer will take several hours to equalize pressure.

Caution Do not leave the freezer unattended while the door is unlatched. The vacuum could release at any time, resulting in the door opening and possible product loss. ▲

Vacuum Relief Port (continued)

To open the door if a vacuum lock occurs:

1. Unlatch the handle of the freezer (Figure 5-1).

2. On the HINGED side of freezer (Figure 5-2), slide the included pliable tool (P/N 402058), or a non-metallic flat object such as a ruler, tongue depresser or plastic putty knife, carefully between the door gasket and door until only the end of the tool handle is showing (Detail). The air exchange will be audible and could last a few minutes.

3. As the air pressure equalizes, the door releases.

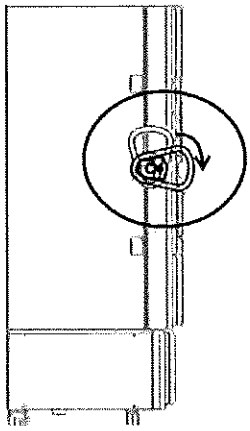

Figure 5-1. Unlatch

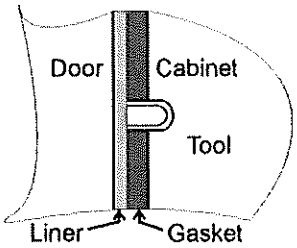

Detail

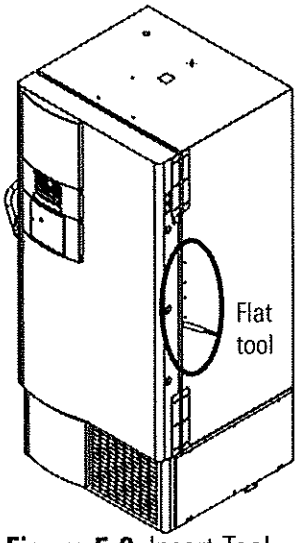

Figure 5-2. Insert Tool

Vacuum Relief Port Maintenance

Observe the inner side of port periodically for frost and ice build-up. Remove any frost with a soft dry cloth. If the tube should become clogged with ice, it must be cleaned. Make **sure during cleaning that the vacuum relief tube is completely free of ice to prevent rapid ice formation.**

Factors that can affect the the vacuum relief port performance include: high ambient temperature, high humidity conditions and frequent door openings. Maintenance should be performed weekly or as needed.

Caution Failure to maintain the vacuum relief port may result in excessive ice build up inside the tube, clogging the port, and inability to open the door. The vacuum relief port may need to be cleaned more often with frequent door openings and high humidity environments. ▲

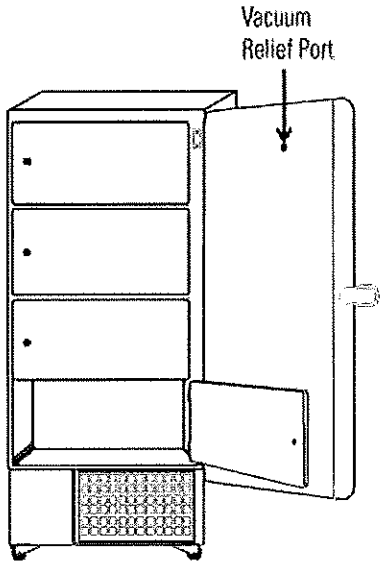

Figure 5-4. Port Location

Replace the Battery

1. To gain access to the battery, open the lower door by grasping the bottom left corner. The battery is rectangular in shape, located on the front left corner of the compressor compartment and is secured in place by a mounting bracket.
2. Directly above the battery(s) is the battery power switch. Turn the battery power switch to the off position (O).
3. Disconnect the battery connections.
4. Remove the old battery and install the new battery.
6. Reconnect the battery (red to positive and black to negative).
7. Turn the battery power switch to Standby mode (⏻).
8. Close lower panel door.

Caution The % of charge can vary depending on the age, usage and condition of the battery. For a consistent and dependable charge, replace the battery every 2 years. Replacement batteries must be rechargeable and are available from Thermo. Refer to the parts list for stock number and description of the replacement batteries. Dispose of the used batteries in a safe manner and in accordance with good environmental practices. ▲

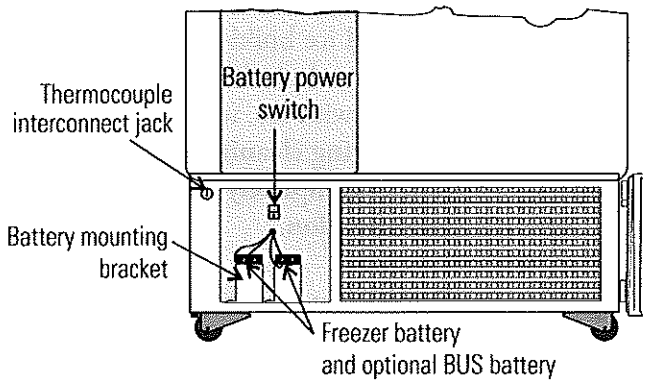

Figure 5-5. Battery Location

Prepare the Unit for Storage

Defrost the unit as described earlier in this section. This will prepare the unit for storage. Turn off the battery power switch (O). Turn off the freezer power switch. Disconnect power to the battery(s) and to the freezer.

Warning If the unit has been in service, turn it off and disconnect the power cord connector before proceeding with any maintenance. ▲

PREVENTIVE MAINTENANCE

Freezers

Your equipment has been thoroughly tested and calibrated before shipment. Regular preventive maintenance is important to keep your unit functioning properly. The operator should perform routine cleaning and maintenance on a regular basis. For maximum performance and efficiency, it is recommended that the unit be checked and calibrated periodically by a qualified service technician.

The following is a condensed list of preventive maintenance requirements. See the specified section of the instruction manual for further details.

We have qualified service technicians, using NIST traceable instruments, available in many areas. For more information on Preventive Maintenance or Extended Warranties, please contact us at the number below.

Cleaning and calibration adjustment intervals are dependent upon use, environmental conditions and accuracy required.

Tips:

- Fill an upright by starting at the bottom near the probe and add racks to one shelf at a time. Allow freezer to recover to setpoint between shelves.
- Fill a chest by starting at the left side near the probe. Filling with room temperature racks will result in a long pull-down time.
- Always make certain the vacuum relief port is free of frost and ice, to allow for timely re-entry into the freezer after a door opening.
- Fill unit with frozen product to help overall performance; frozen water jugs, for example.

401 Millcreek Road, Box 649 • Marietta, Ohio 45750 USA • 740-373-4763
USA and Canada 888-213-1790 • Telefax: 740-373-4189 • services.controlenv@thermo.com

Preventive Maintenance for Signature Series Freezers

Refer to Manual Section	Action	Monthly	Yearly	Every 2 Years
--	Verify ambient temperature, <90°F	✓		
--	* Adjust door handle for firm latching, as needed	✓		
Figure 1-4 for probe location 5	Check and clean probe cover, vacuum relief port, gaskets hinges and inner doors of ice and snow.	✓ *More frequent cleaning may be required, depending on use and environmental conditions.*		
5	Check air filter. Clean and replace as needed	✓		
1, 3	Check alarm back-up battery.	✓		** Replace
--	Check condenser fan motor for unusual motor noise or vibration.		✓	
2	* Verify and document calibration, at the minimum, annually.		✓	
5	* Clean condenser compartment and wipe off condenser		✓	

* Qualified service technicians only

** Dispose of properly, according to all state and federal regulations.

To minimize ice build-up inside freezer:

- Locate the freezer away from drafts or heating/cooling vents.
- Keep the number of door openings to a minimum.
- Minimize the length of time door is open.
- Make sure door latches securely after opening.

Section 6 Factory Installed Options

Descriptions of freezer options which can only be factory installed follow.

Back-Up System (BUS 195875, 195877)

Warning Before installation of BUS components, make sure the power to the freezer is disconnected, the battery switch is turned off (O) and the freezer has warmed to ambient temperature. ▲

The built-in BUS (back up system) will keep the freezer chamber temperature below the critical level in the event of a power or equipment failure. If power to the freezer fails, or temperature increases to the back up alarm set point, the BUS injects liquefied gas into the chamber to keep the chamber temperature within the specified range.

The BUS operates on an internal 12-volt, rechargeable battery which is kept charged during normal operation by the integral battery charger.

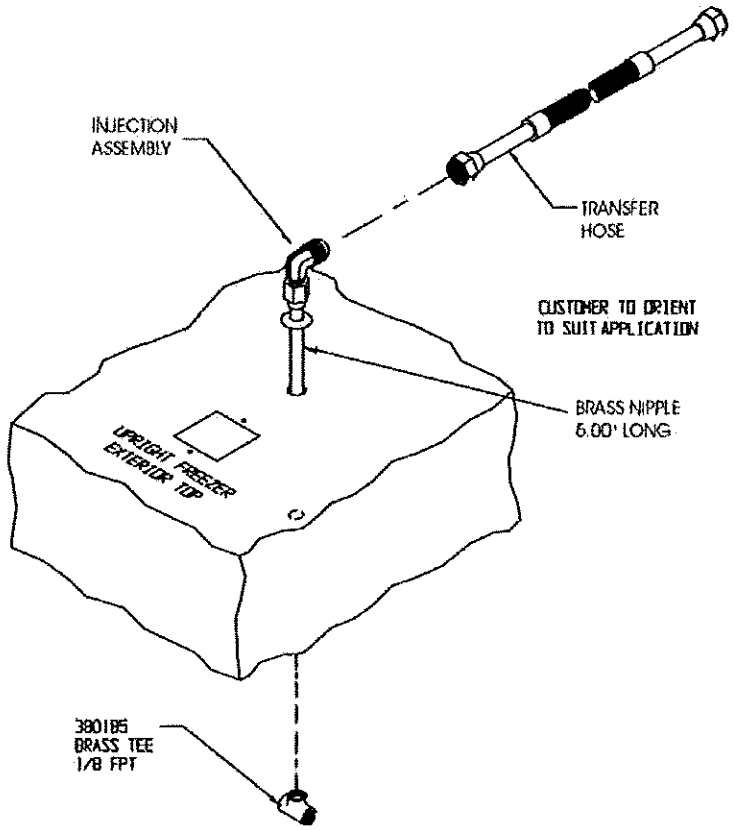

Figure 6-1. Injection

Install Vent Stack, Solenoid and Injection Assembly

1. Install the injection assembly through the 1/2" pre-punched hole, directly behind the 2" vent stack hole in the center of the chamber ceiling.

Note Cover the open end of injection assembly with tape to keep insulation from entering the nipple. ▲

2. Slide 3/8" flatwasher over open end of nipple.
3. Insert the covered end of the injection assembly through the exterior hole.
4. Remove the tape covering from the end of the nipple and install the 1/8" NPT brass tee on the open end of the nipple. Place Permagum sealant between the brass tee and the interior top.
5. Remove the two Phillips head screws securing the metal bracket on the vent stack assembly.
6. Install the vent stack through the opening and secure it to the top of the freezer, using screws.
7. Go to the interior and seal around the end of the vent stack with Permagum.
8. Install the transfer hose connecting one end to the injection assembly, the other end to the solenoid valve. Install the solenoid valve to the supply source. The solenoid mounting bracket is not required and may be discarded.

Caution When selecting a CO_2 supply cylinder, it must be equipped with a siphon tube. ▲

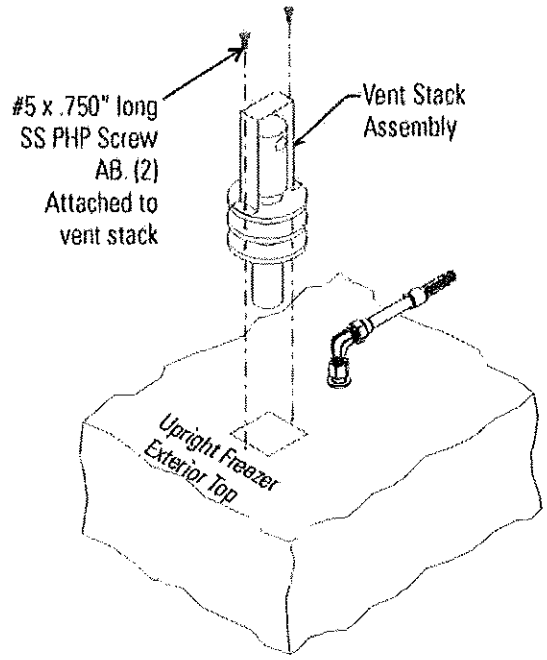

Figure 6-2. Vent Stack

Install the Temperature Probe

1. Locate the 0.500" pre-punched hole in the upper left back corner of the chamber ceiling. Remove the tie wrap securing the coiled probe/solenoid harness. Uncoil the probe lead and run the probe tip (approximately 12") down through 0.500" porthole (Figure 6-4).

2. As in Figure 6-3, thread the small tie wrap through the openings in the front of the bracket. Secure the probe on the back of the bracket with the tie wrap.

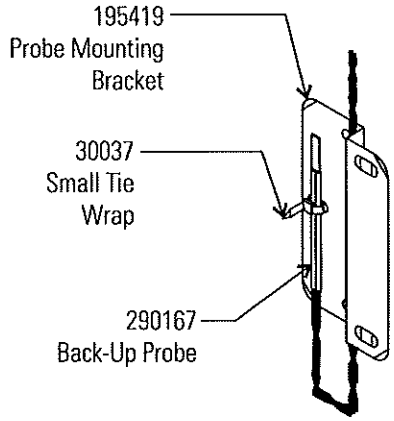

Figure 6-3. Probe

3. Tap #8-32 the two pre-punched holes located on the interior left wall of the freezer. Mount the bracket. Figure 6-4 shows the Back-Up probe mounted on the interior left side wall of the freezer.

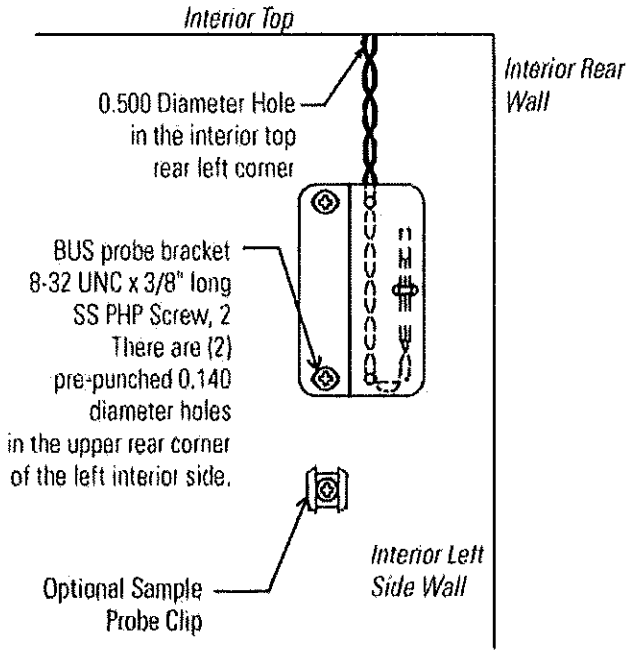

Figure 6-4. Probe Bracket

Connect the Probe/Solenoid Harness

1. Remove the four screws on the freezer back panel and use them to mount the tie wrap anchors as shown in Figure 6-5. Secure the probe wire with tie wraps.

2. Plug the solenoid/probe connector into the BUS connection and secure with a screw on the right and left side. The connector is keyed.

3. Loosen the terminal screws on the solenoid. Slide the spade lug connectors under the screws and tighten to secure.

4. Connect power to the freezer. Turn the freezer On, with battery switch Off (O).

   a. The Solenoid Engaged light on the BUS control panel will illuminate (no injection occurs). This light stays on until the unit is below BUS setpoint.

   b. The Low Battery indicator may also illuminate.

5. Turn the battery switch to Standby mode (⏻) to charge both batteries.

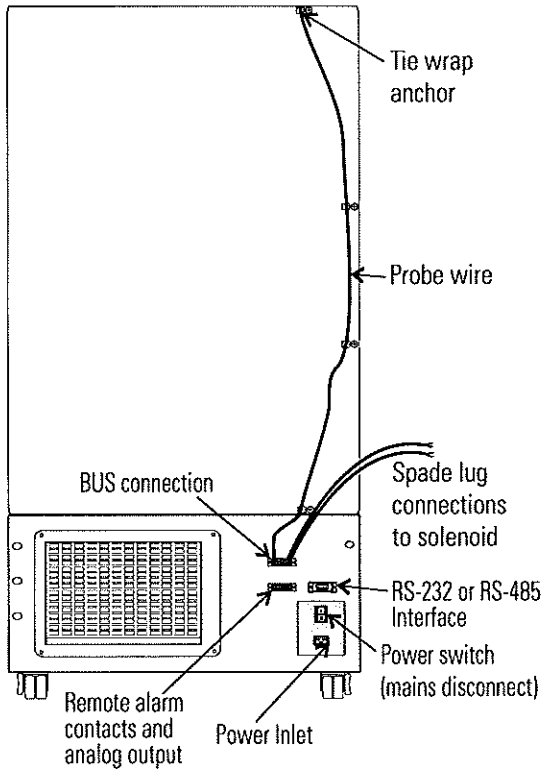

Figure 6-5. Connections

BUS Operation and Maintenance

Warning When activated, this unit injects liquid nitrogen or carbon dioxide. Liquid nitrogen can cause serious freezing (frostbite) if it comes in contact with unprotected skin or eyes. Nitrogen and carbon dioxide gas suppresses oxygen levels and may cause suffocation if area is not well ventilated. Refer to Appendix A for the proper handling of liquid LN_2. ▲

Caution Make sure the pressure relief valve on any LN_2 tank is adjusted to 30 PSI max blow-off. ▲

Warning Carbon dioxide gas suppresses oxygen levels and may cause suffocation if area is not well ventilated. Refer to "Handling Liquid CO_2 in Appendix B. ▲

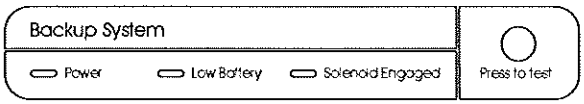

Figure 6-6. Back-Up System Control Panel

Power - indicates the unit has AC power.

Low Battery - battery charge is low. The battery needs replaced or recharged.

Solenoid Engaged - BUS has opened the solenoid so it can inject gas (CO_2 or LN_2).

Press-To-Test - Activates the solenoid and injects LN_2 or CO_2 into the freezer chamber as long as the button is depressed. The solenoid engaged indicator should light. If the Low Battery indicator lights during the test, replace the BUS battery.

Note Solenoid will not engage if door is open. ▲

Set Optional BUS Setpoint

The optional back up system is designed to inject CO_2 or LN_2 into the freezer compartment if the temperature rises above back up system set point. To set the BUS set point:

1. Press the Mode key until the Settings indicator lights.
2. Press the right arrow until "BACKUP = -XX" is displayed in the message center.
3. Press the up or down arrow key until the desired BUS set point is displayed.
4. Press Enter to save the setting.
5. Press the Mode key until the Run indicator lights or press the right or left arrow to go to next or previous parameter.

If no control keys are pressed, the freezer automatically returns to RUN mode after 5 minutes.

Caution The BUS setpoint cannot be set any colder than the high temperature alarm setpoint (see Section 1). If the back-up system is installed with CO_2, then -65°C is the coldest BUS setpoint that can be used (if the cabinet setpoint is -75°C or colder).
Changing the operating temperature setpoint can affect the BUS setpoint. The BUS setpoint will self-adjust to maintain a temperature of at least 10°C above the operating temperature setpoint. ▲

Test the BUS

After the freezer has stabilized and both batteries are fully charged, the BUS can be tested to verify proper operation.

1. Disconnect the AC power to the freezer by turning the power switch off.
2. As the freezer warms up, verify the BUS injects at the desired temperature. Displayed temperature may vary by a few degrees from inject temperature due to the differences in probe locations.

Clean the Vent Stack

Routinely check the vent stack for frost or ice build-up. The type of frost that forms in the vent stack is generally very soft and may be easily removed with a bristle brush or soft cloth. If ice build-up has occurred, a complete defrost may occasionally be required. See Section 5 for freezer defrost instructions.

Disconnect the Fitting Assembly and Transfer Hose

To disconnect the freezer back-up from the gas supply:

1. Close the supply valve.
2. Depress the test button on the Back-Up System control box to remove the gas from the line.
3. Slowly disconnect the fitting assembly from the supply (in the event that any gas remains in the line).

Chart Recorder

To install the chart paper in the recorder, follow the steps below.

1. Open the glass door of the recorder and press button #3 until the pen begins to move outward.
2. Unscrew the knob at the center of the chart and remove the paper.
3. Install the new chart paper, position the paper to the correct time line and replace the knob.
4. Remove the cap from the felt pen and press button #3.

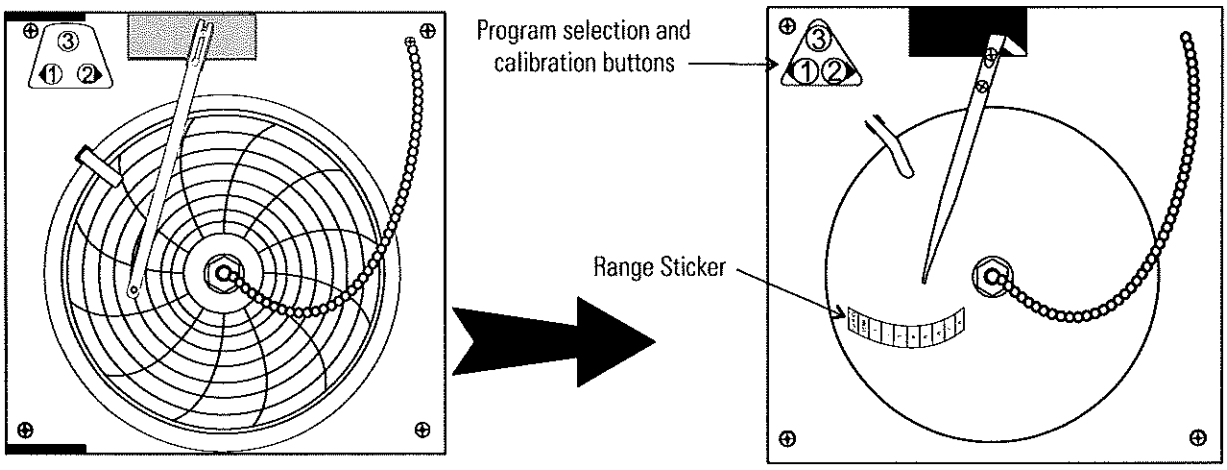

Figure 6-7. Recorder Details

Change the Recorder Temperature Range

The chart recorder contains eight temperature ranges and is factory-programmed for the freezer. A list of the programs with temperature ranges follows.

1. Press and hold button #3 for one second, then let the pen move off the chart paper.

2. Press and hold for five seconds either button #1 or button #2.

3. Release the button and the green LED will begin to flash. Count the number of flashes to determine the present program setting.

4. To change the program setting, press the left or right arrows to increase or decrease the count.

5. When the desired program number is flashing, press button #3 to bring the pen arm back onto the chart. Recording will begin in the new program.

Range	From	To
1	-40	30°C
2	0	60°C
3	-100	38°C
4	-5	50°C
5	0	100°C
6	-100	200°C
7	-115	50°C
8	-10	70°C

Calibrate the Recorder

Caution The recorder must be in service for 24 hours before performing the following calibration procedure. ▲

1. Place an accurate thermometer in the chamber next to the recorder probe.
2. Temperature probes for the recorder are located in the left front corner of the freezer chamber (Figure 1-4).
3. After about three minutes, compare the thermometer reading with the chart recorder reading.
4. If an adjustment is necessary, press the #1 button to move the pen to the left or the #2 to move the pen to the right. The button must be held about five seconds before the pen begins to move. Release the button when the pen position matches the thermometer.

Note The felt-tip pen on the recorder requires periodic replacement. Usually the ink will appear to fade before replacement becomes necessary. Additional pen tips may be purchased. Refer to Parts List, Section 8. ▲

Datalogger

Dataloggers and ELPRO evaluation software provide monitoring and documentation of temperature and alarm conditions. The dataloggers have a memory capacity of 64,000 measured values or data points. Temperature is measured, stored and displayed. Alarm conditions are recorded. Optional evaluation software permits data to be downloaded to a PC. A variety of statistical information is provided through calculations, analysis, graphs and printed reports. Refer to the ELPRO documentation for operating instructions for the datalogger.

Water-cooled Condenser

The water-cooled condenser is a factory installed option (P/N 195964, 195965, 195967) and requires a qualified technician at freezer installation. The installation should include proper adjustment of the regulating valve, which controls the discharge pressure.

Table 6-1. Specifications

Water Source	Tower	City
Water Pressure	Not to exceed 150 psig	
Water Temperature Range	Not to exceed 29.4C (85F)	
Inlet Connection	0.5" compression	
Outlet Connection	0.5" compression	
Flow Rate Required	3.0 gallons (11.4 liters) per minute	1.0 gallon (3.8 liters) per minute
Drain Required	No (return line is required)	Yes

Five Inner Door Option

The five inner door option (P/N 189405, 189406, 189407, 195652) is factory installed. The freezer is converted to accommodate four adjustable specimen shelves with the fifth "shelf" as the bottom of the freezer chamber.

Section 7 Specifications

Model	5602	5603	5604
Temperature Range	-50°C (-58°F) to -86°C (-123°F) in an 18C to 32C* (64.4F to 89.6F) ambient		
Exterior Dimensions	33.3"W x 77.8"H x 31.0" 84.6 x 197.6 x 78.7 cm	33.3"W x 77.8"H x 31.0" 84.6 x 197.6 x 78.7 cm	33.3"W x 77.8"H x 37.0" 84.6 x 197.6 x 94.0 cm
Interior Dimensions	23.0"W x 51.5"H x 19.3" 58.4x130.8x49.0cm	23.0"W x 51.5"H x 19.3" 58.4 x 130.8 x 49.0 cm	23.0"W x 51.5"H x 25.3" 58.4 x 130.8 x 64.3 cm
Capacity	13.0 cu. ft. (368.1 liters)	13.0 cu. ft. (368.1 liters)	17.3 cu. ft. (489.9 liters)
Refrigeration	Two 1 HP (2545 BTUH each)		
Insulation	Non-CFC, foamed-in-place urethane: 5.0" (12.7 cm) cabinet; 4.5" (11.4 cm) door		
Electrical	230V,50/60Hz, 12.0FLA Operating Range: 208-240V	120V, 60 Hz, 16.0 FLA Operating Range: 108-130V	120V, 60 Hz, 16.0 FLA Operating Range: 108-130V
Breaker Requirements	15 amp, 230V, Dedicated Circuit, 15 Amp Time Delay Breaker	20 amp, 120V, Dedicated Circuit, 20 amp Time Delay Breaker	20 amp, 120V, Dedicated Circuit, 20 amp Time Delay Breaker
Shipping Weight: Motor	712 lbs. (323.0 kg)	712 lbs. (323.0 kg)	795 lbs. (360.6 kg)

Model	**5605**	**5606**	**5656**
Temperature Range	-50°C (-58°F) to -86°C (-123°F) in an 18C to 32C* (64.4F to 89.6F) ambient		
Exterior Dimensions	33.3"W x 77.8"H x 37.0" 84.6 x 197.6 x 94.0 cm	40.8"W x 77.8"H x 37.0" 103.6 x 197.6 x 94.0 cm	40.8"W x 77.8"H x 37.0" 103.6 x 197.6 x 94.0 cm
Interior Dimensions	23.0"Wx51.5"Hx25.3" 58.4 x 130.8 x 64.3 cm	30.6"W x 51.5"H x 25.3" 77.7 x130.8 x 64.3 cm	30.6"W x 51.5"H x 25.3" 77.7 x 130.8 x 64.3 cm
Capacity	17.3 cu. ft. (489.9 liters)	23.0 cu. ft. (651.3 liters)	23.0 cu. ft. (651.3 liters)
Refrigeration	Two 1 HP (2545 BTUH each)		
Insulation	Non-CFC, foamed-in-place urethane: 5.0" (12.7 cm) cabinet; 4.5" (11.4 cm) door		
Electrical	230V,50/60Hz, 12.0FLA Operating Range: 208-240V	230V,50/60Hz, 12.0FLA Operating Range: 208-240V	120V, 60 Hz, 16.0 FLA Operating Range: 108-130V
Breaker Requirements	15 amp, 230V, Dedicated Circuit, 15 Amp Time Delay Breaker	15 amp, 230V, Dedicated Circuit, 15 Amp Time Delay Breaker	20 amp, 120V, Dedicated Circuit, 20 amp Time Delay Breaker
Shipping Weight: Motor	795 lbs. (360.6 kg)	900 lbs. (408.2 kg)	900 lbs. (408.2 kg)

Model	**5607**
Temperature Range	-50°C (-58°F) to -86°C (-123°F) in an 18C to 32C* (64.4F to 89.6F) ambient
Exterior Dimensions	46.8"W x 77.8"H x 37.0" 118.9x197.6x94.0cm
Interior Dimensions	36.6"W x 51.5"H x 27.0" 93.0x130.8x68.6cm
Capacity	28.0 cu. ft. (792.8 liters)
Refrigeration	Two 1 HP (2545 BTUH each)
Insulation	Non-CFC, foamed-in-place urethane: 5.0" (12.7 cm) cabinet; 4.5" (11.4 cm) door
Electrical	230V,50/60Hz, 12.0FLA Operating Range: 208VAC-240VAC
Breaker Requirements	15 amp, 230V, Dedicated Circuit, 15 Amp Time Delay Breaker
Shipping Weight Motor	980 lbs. (444.5 kg)

Certifications
Declaration of Conformity is available from the factory

Safety Specifications
Indoor Use Only
Altitude - Up to 2,000 meters
Temperature - 5°C to 43°C
Humidity - Maximum RH 80% for temperatures up to 31°C, decreasing linearly to 50% RH at 40°C
Mains Supply Fluctuations - Mains supply voltage fluctuations not to exceed ±10% of the nominal voltage
Installation Category II [1]
Pollution Degree 2 [2]
Class of Equipment I

---

1 Installation category (overvoltage category) defines the level of transient overvoltage which the instrument is designed to withstand safely. It depends on the nature of the electricity supply and its overvoltage protection means. For example, in CAT II which is the category used for instruments in installations supplied from a supply comparable to public mains such as hospital and research laboratories and most industrial laboratories, the expected transient overvoltage is 2500V for a 230V supply and 1500V for a 120V supply.

---

2 Pollution degree describes the amount of conductive pollution present in the operating environment. Pollution degree 2 assumes that normally only non-conductive pollution such as dust occurs with the exception of occasional conductivity caused by condensation.

Section 8 Parts

REV	ECN NO.	DATE	BY	CAD	APPD	DESCRIPTION OF REVISION
0	N/A	12-04-02	PDK	PDK	LDN	RELEASED FOR PRODUCTION
1	FR-1943	06-13-07	CRM	KDG	CCS	CHG. 211039/41 HEAT EXCHG. TO 211050

BILL OF MATERIALS

ITEM NO.	PART NO.	PART DESCRIPTION
1	209016	DRYER
2	211050	HEAT EXCHANGER
3	227927	HIGH STAGE CAP. TUBE
4	227928	LOW STAGE CAP. TUBE

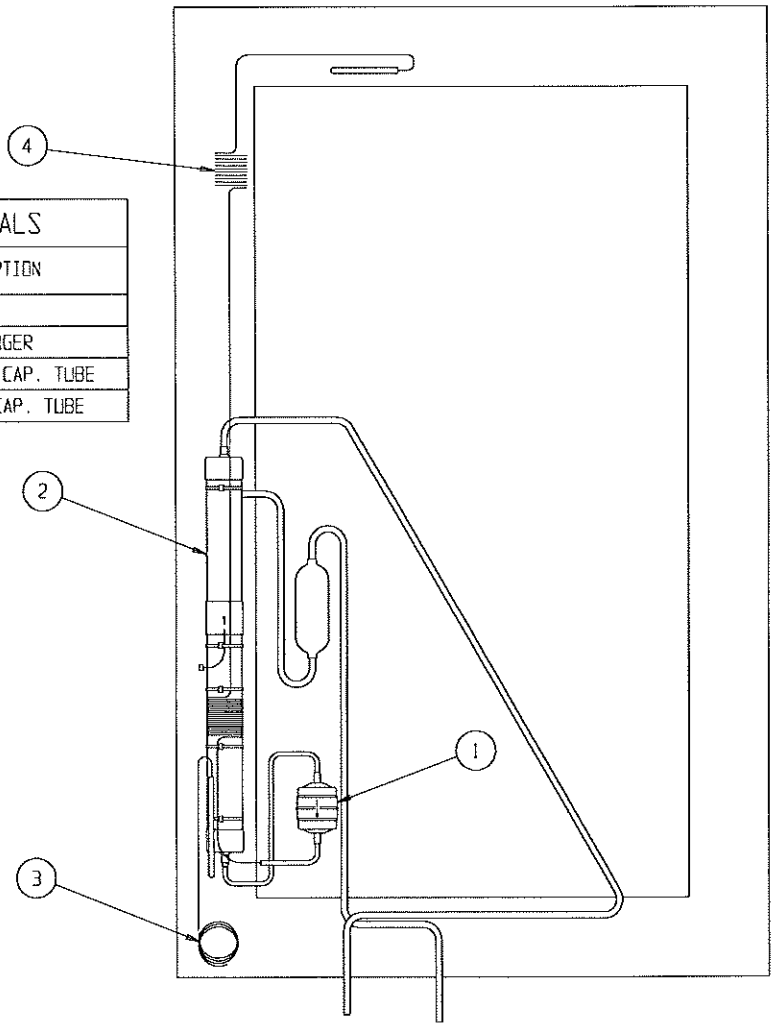

THIS DOCUMENT CONTAINS PROPRIETARY INFORMATION AND SUCH INFORMATION IS NOT TO BE DISCLOSED TO OTHERS FOR ANY PURPOSE NOR USED FOR MANUFACTURING PURPOSES WITHOUT WRITTEN PERMISSION FROM THERMO FISHER SCIENTIFIC

ThermoFisher SCIENTIFIC
BOX 649, MARIETTA, OHIO 45750

MODEL/PART NAME: 8600 UP-RIGHT FREEZER
DWG TITLE: HEAT EXCHANGER ASSEMBLY
DWN: PDK | CAD: PDK | APPD: LDN | DATE: 12-04-02 | SCALE: NTS
MATERIAL: N/A
PAINT COLOR: N/A
TOLERANCE UNLESS OTHERWISE SPECIFIED
ANGLES: DECIMAL: .XX=± .XXX=±
DRAWING NUMBER 8602-205-1
SIZE B

Upright Freezer Heat Exchanger Assembly

8602-205-1-D REV.1
Page 1 of 1

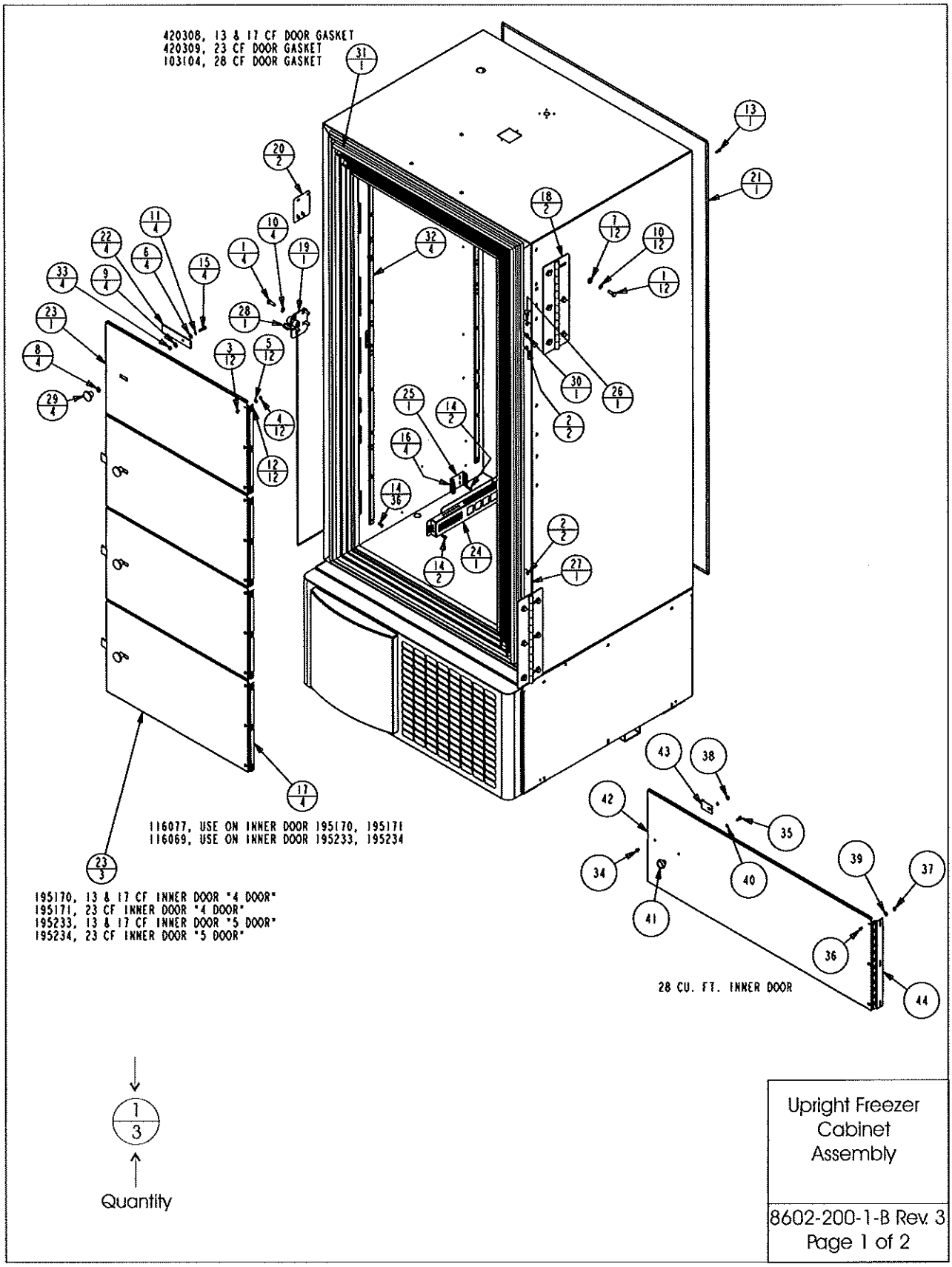
420308, 13 & 17 CF DOOR GASKET
420309, 23 CF DOOR GASKET
103104, 28 CF DOOR GASKET
116077, USE ON INNER DOOR 195170, 195171
116069, USE ON INNER DOOR 195233, 195234
195170, 13 & 17 CF INNER DOOR "4 DOOR"
195171, 23 CF INNER DOOR "4 DOOR"
195233, 13 & 17 CF INNER DOOR "5 DOOR"
195234, 23 CF INNER DOOR "5 DOOR"
28 CU. FT. INNER DOOR
Quantity
Upright Freezer Cabinet Assembly
8602-200-1-B Rev. 3
Page 1 of 2

REV	ECN NO.	DATE	BY	CAD	APPD	DESCRIPTION OF REVISION
1	FR-1673	06-05-03	PDK	PDK	LDN	ADDED VACUUM RELIEF PORT
2	FR-1698	09-19-03	JDL	PDK	LDN	ADDED SCREW TO VACUUM RELIEF PORT
3	FR-1789	06-02-05	DHG	DHG	[illegible]	REMOVED VRP IN TOP OF CABINET, DMMVRP

BILL OF MATERIALS

ITEM NO.	PART NO.	PART DESCRIPTION
1	20003	1/4-20 X 3/4 SS HH CAP SCREW
2	22053	#8-32 X 1/2 SS PHP SCREW
3	22115	#6-32 X 1/4 SS PHP SCREW
4	23009	#6-32 SS HEX NUT
5	23020	#6 SS FLAT WASHER
6	23021	#8 SS FLAT WASHER
7	23023	1/4 SS FLAT WASHER
8	23043	NYLON FLAT WASHER
9	23044	1/4" NYLON SHOULDER WASHER
10	23062	1/4 SS EXT TOOTH LOCKWASHER
11	23080	#8 SS SPRING LOCKWASHER
12	24032	#8-32 X 3/8 SS PHP SCREW F POINT
13	24041	#6-32 X 1/2 SS PHP SCREW F POINT
14	24042	#8-32 X 1/2 SS PHP SCREW F POINT
15	59008	#8-32 X 7/8 SS PHP SCREW
16	114020	5/8" X 1/2" ID GROMMET
17	116077	FRONT PANEL HINGE
18	116092	EXTERIOR FREEZER DOOR HINGE
19	121069	FREEZER CAM LATCH STRIKE
20	180312	CAM LATCH STRIKE COVER
21	189921	EXTERIOR BACK 13 & 17
22	195169	LATCH TAB
23	195170	13/17 CU. FT. INNER DOOR
24	195866	PROBE GUARD
25	195867	PROBE MOUNT
26	195874	CABINET CABLE COVER PLATE
27	195879	CABINET CABLE BLANK COVER PLATE
28	195900	SINGLE DOOR SWITCH ASSY.
29	285658	BLACK PLASTIC KNOB
30	330010	1/2" SPLIT SNAP BUSHING
31	420308	13 & 17 CU. FT. SINGLE DOOR FRAME GASKET
32	500177	PILSATER STRIPS
33	515083	1/4 DIA. X 1/4L SS SPACER
34	22051	#8-32 X 1/4 SS PHP SCREW
35	22053	#8-32 X 1/2 SS PHP SCREW
36	22115	#6-32 X 1/4 SS PHP SCREW
37	23009	#6-32 SS HEX NUT
38	23010	#8-32 SS HEX NUT
39	23020	#6 SS FLAT WASHER
40	23080	#8 SS SPRING LOCKWASHER
41	120400	BLACK PLASTIC KNOB
42	195511	28 CU. FT. INNER DOOR
43	195602	LATCH TAB
44	116090	FRONT PANEL HINGE

THIS DOCUMENT CONTAINS PROPRIETARY INFORMATION AND SUCH INFORMATION IS NOT TO BE DISCLOSED TO OTHERS FOR ANY PURPOSE NOR USED FOR MANUFACTURING PURPOSE WITHOUT WRITTEN PERMISSION FROM THERMO ELECTRON

MODEL/PART NAME: 8600 UP-RIGHT FREEZER

DWG TITLE: 8602 UP-RIGHT FREEZER ASSEMBLY

DWN: PDK | CAD: PDK | APPD: MAH | DATE: 10-30-02 | SCALE: 0.094

MATERIAL: N/A

PAINT: N/A

Upright Freezer Cabinet Assembly

Thermo
ELECTRON CORPORATION
Controlled Environment Equipment
Box 649, Marietta, Oh 45750

TOLERANCE UNLESS OTHERWISE SPECIFIED
ANGLES: DECIMAL: .XX=±
.XXX=±

DRAWING NUMBER 8602-200-1

SIZE B

8602-200-1-B Rev. 3
Page 2 of 2

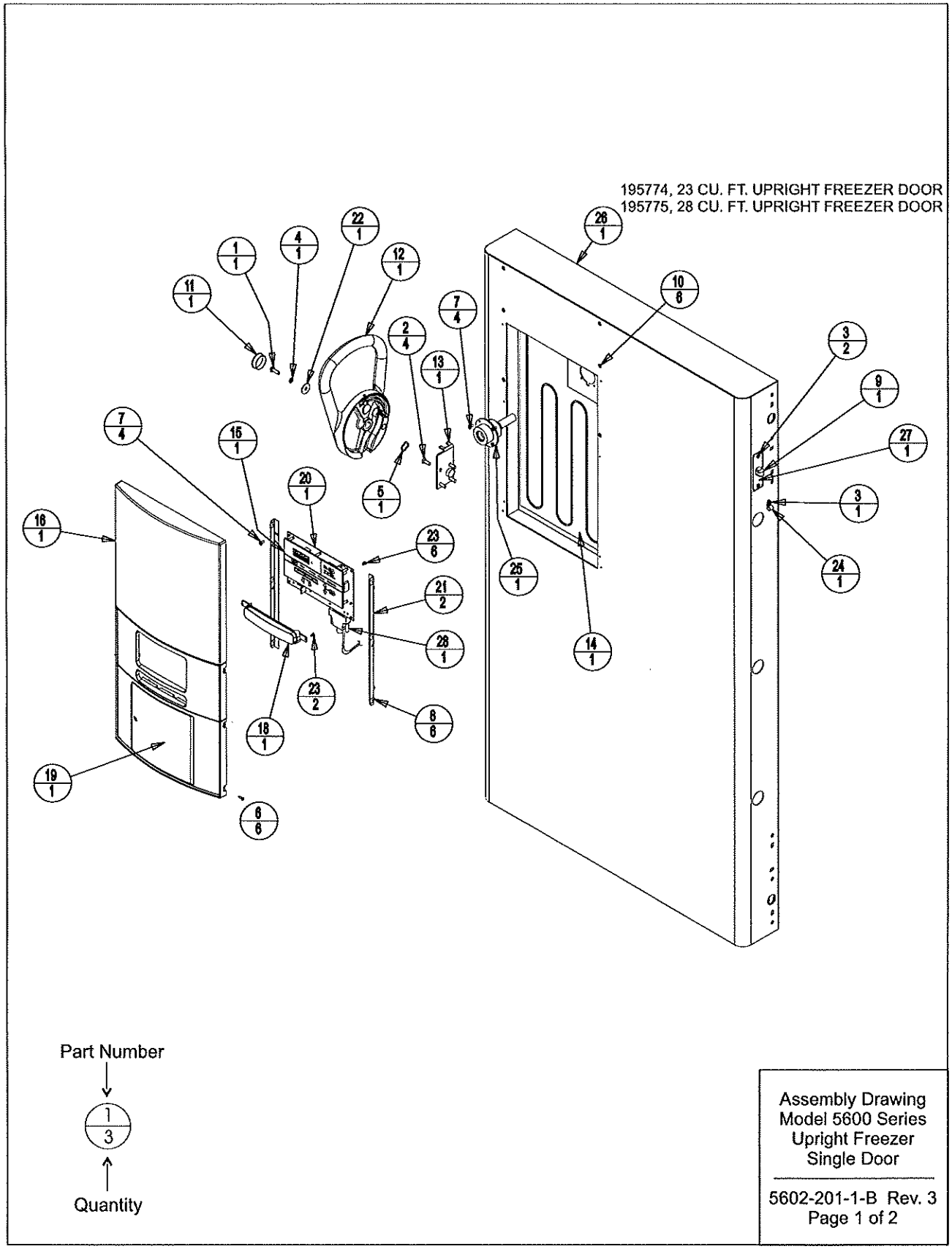
195774, 23 CU. FT. UPRIGHT FREEZER DOOR
195775, 28 CU. FT. UPRIGHT FREEZER DOOR
Part Number
Quantity
Assembly Drawing
Model 5600 Series
Upright Freezer
Single Door
5602-201-1-B Rev. 3
Page 1 of 2

REV	ECN NO.	DATE	BY	CAD	APPD	DESCRIPTION OF REVISION
0	N/A	12-11-02	PDK	PDK	MAH	RELEASED FOR PRODUCTION
1	FR-1673	06-06-03	DHG	PDK	LDN	REVISED CONTROL PANEL FASTENERS
2	FR-1769	11-18-04	RSB	KDG	LDN	ADDED VACUUM RELIEF
3	FR-2004	07-01-08	KDG	KDG	CCS	ADDED 195775 FOR 28 CU. F.T 5607

BILL OF MATERIALS

ITEM NO.	PART NO.	PART DESCRIPTION
1	20003	1/4-20 X 3/4 SS HH CAP SCREW
2	20058	#1/4-20 X 3/4 SS FHP UC SCREW
3	22053	#8-32 X 1/2 SS PHP SCREW
4	23033	1/4 SS INTERNAL TOOTH LOCK WASHER
5	23057	5/8 WAVE WASHER
6	24016	#6 X 1/2" SS PHP SCREW AB POINT
7	24032	#8-32 X 3/8 SS PHP SCREW F POINT
8	25040	#6 U SPEED NUT STL. STL.
9	30033	RIGHT ANGLE STRAIN RELIEF
10	111028	TINNERMAN TUBULAR SPEED CLIP
11	117038	1-3/8" DIA. THERMO WHITE HOLE PLUG
12	121068	121068 FINISHED HANDLE/LATCH ASSEMBLY
13	121075	CAM LATCH MOUNT
14	132114	HEATER, 3W, 14VDC
15	140313	CONTROL PANEL
16	180316	VWR CONTROL CENTER BLANK PANEL
17	180317	VWR CONTROL CENTER DISPLAY BEZEL
18	180318	VWR BACK-UP SYSTEM BLANK PANEL
19	180319	VWR CONTROL CENTER RECORDER BLANK
20	191802	FREEZER DISPLAY BOARD
21	195837	MOUNTING ANGLE FOR 180305
22	510305	1" OD FLAT WASHER
23	590027	#6-32 X 1/4 SS PHP EXT SEMS SCREW
24	600085	5/16 NYLON CABLE CLAMP
25	1950069	HEATED VACUUM RELIEF PORT
26	195773	13 &17 CU. FT. UPRIGHT FREEZER DOOR "900"
27	195830	UPRIGHT DOOR WIREWAY COVER PLATE
28	430336	15 FT, RS-232 CABLE 25 POS.

THIS DOCUMENT CONTAINS PROPRIETARY INFORMATION AND SUCH INFORMATION IS NOT TO BE DISCLOSED TO OTHERS FOR ANY PURPOSE NOR USED FOR MANUFACTURING PURPOSE WITHOUT WRITTEN PERMISSION FROM THERMO FISHER SCIENTIFIC

MODEL/PART NAME: ULT UP-RIGHT SERIES FREEZER
DWG TITLE: 5600 SINGLE DOOR BOM ASSEMBLY
DWN: PDK | CAD: PDK | APPD: MAH | DATE: 10-30-02 | SCALE: 0.094
MATERIAL: N/A
PAINT: N/A
TOLERANCE UNLESS OTHERWISE SPECIFIED
ANGLES: DECIMAL: XX=± .XXX=±
DRAWING NUMBER 5602-201-1
SIZE B

ThermoFisher SCIENTIFIC
BOX 649, MARIETTA, OHIO 45750

Assembly Drawing
Model 5600 Series
Upright Freezer
Single Door

5602-201-1-B Rev. 3
Page 2 of 2

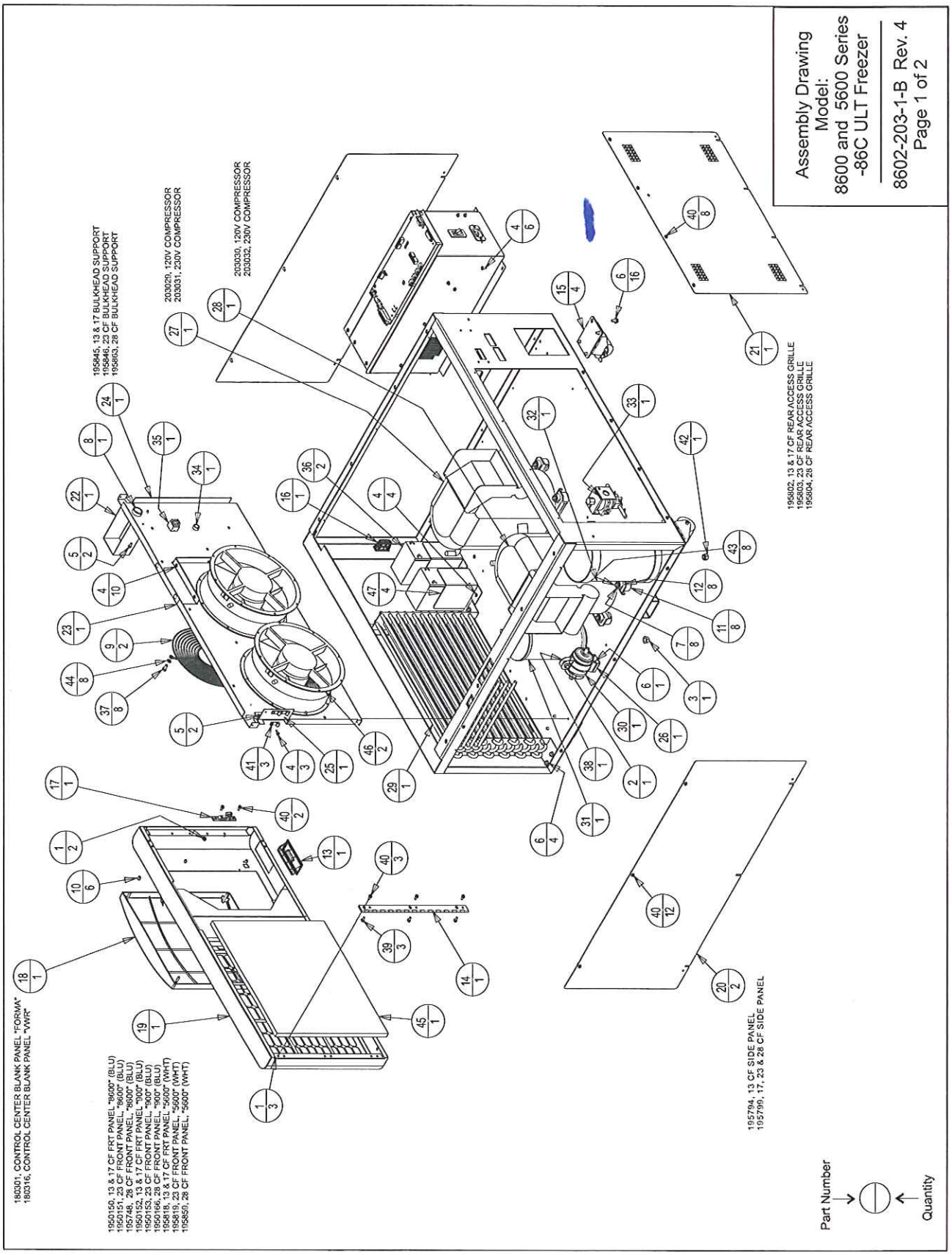
Assembly Drawing
Model:
8600 and 5600 Series
-86C ULT Freezer
8602-203-1-B Rev. 4
Page 1 of 2
160301, CONTROL CENTER BLANK PANEL "FORMA"
160316, CONTROL CENTER BLANK PANEL "VWR"
1950150, 13 & 17 CF FRT PANEL "5600" (BLU)
1950151, 23 CF FRONT PANEL "5600" (BLU)
195748, 28 CF FRONT PANEL "5600" (BLU)
1950152, 13 & 17 CF FRT PANEL "900" (BLU)
1950153, 23 CF FRONT PANEL "900" (BLU)
1950166, 28 CF FRONT PANEL "900" (BLU)
195818, 13 & 17 CF FRT PANEL "5600" (WHT)
195819, 23 CF FRONT PANEL, "5600" (WHT)
195859, 28 CF FRONT PANEL, "5600" (WHT)
195845, 13 & 17 BULKHEAD SUPPORT
195846, 23 CF BULKHEAD SUPPORT
195863, 28 CF BULKHEAD SUPPORT
203029, 120V COMPRESSOR
203031, 230V COMPRESSOR
203030, 120V COMPRESSOR
203032, 230V COMPRESSOR
195794, 13 CF SIDE PANEL
195799, 17, 23 & 28 CF SIDE PANEL
195802, 13 & 17 CF REAR ACCESS GRILLE
195803, 23 CF REAR ACCESS GRILLE
195804, 28 CF REAR ACCESS GRILLE
Part Number
Quantity

REV	ECN NO.	DATE	BY	CAD	APPD	DESCRIPTION OF REVISION
2	PIP-118	01-24-05	KDG	KDG	LDN	CHANGED BATTERY MOUNTING
3	SI-9962	03-26-08	KDG	KDG	LDN	CHG. FORMA FRONT PANEL TO BLUE/VBL
4	FR-2004	07-01-08	KDG	KDG	CCS	ADDED FRONT PANEL FOR 5607

BILL OF MATERIALS

ITEM NO.	PART NO.	PART DESCRIPTION
1	23002	#8-32 ZP LKWASH HEX NUT
2	23011	1/4-20 ZP LKWASH HEX NUT
3	23013	3/8-16 ZP LKWASH HEX NUT
4	24030	#8 X 1/2" TEKS SCREW
5	24032	#8-32 X 3/8 SS PHP SCREW F POINT
6	24038	1/4-20 X 1/2 SELF TAPPING SCREW
7	24049	1/4 ZP FLAT WASHER
8	30016	1" SNAP BUSHING
9	108020	10" WIRE FAN GUARD
10	111028	TINNERMAN TUBULAR SPEED CLIP
11	114033	COMPRESSOR MOUNTING FOOT
12	114034	COMPRESSOR MOUNTING SLEEVE
13	115032	BLACK ABS PLASTIC PULL
14	116115	FRONT PANEL HINGE
15	120011	DUAL WHEEL CASTER
16	121071	LATCH CATCH, PART OF 121071 ASSEMBLY
17	121071	LATCH KEEPER, PART OF 121071 ASSEMBLY
18	180301	THERMO CONTROL CENTER BLANK PANEL
19	195746	13&17 CU. FT. UR FRZ BASE FRONT PNL
20	195799	SIDE PANEL 17, 23 AND 28 CU. FT. UPRIGHT
21	195802	13/17 REAR ACCESS GRILLE
22	195829	MULLION/DOOR SWITCH WIRE COVER
23	195844	UR FRZ FAN BULKHEAD
24	195845	13&17 CU. FT. FAN BULKHEAD SUPPORT
25	195882	REFRIGERATION LINE SUPPORT BRACKET
26	200126	2" RIGID HANGER
27	203031	230V HIGH STAGE COMPRESSOR
28	203032	230V LOW STAGE COMPRESSOR
29	204009	REFRIGERATION CONDENSER
30	209020	LIQUID LINE FILTER DRYER WITH ACCESS PORT

BILL OF MATERIALS (CONTINUED)

	PART NO.	PART DESCRIPTION
31	214006	OIL SEPARATOR
32	214018	10.000" H X 5.000" DIA. EXPANSION TANK
33	220626	120V - 50/60 HZ SOLENOID VALVE
34	330002	5/8" SNAP BUSHING
35	360248	MINI SNAP-IN POWER SWITCH
36	400159	SEALED LEAD ACID BATTERY - 12 VOLT - 7.2 Ah
37	510035	#12-24 X 1/2 SS HH CAP SCREW
38	550043	1/4-20 X 1"L ZP CARRIAGE BOLT
39	590020	#8-32 X 3/8 SS PHP EXT SEMS SCREW
40	590029	#8-32 X 3/8 SS PHP EXT SEMS SCREW W/PATCH
41	600080	1/4 ALUM CLAMP W/LINER
42	610053	3/8-16 NYLON INSERT LOCK NUT
43	680008	1/4-20 X 1-3/4 SELF TAPPING SCREW
44	730087	#12 SS EXT TOOTH LOCKWASHER
45	760203	AIR FILTER
46	900113	10" TUBEAXIAL FAN, 115V
47	1950074	BATTERY MOUNTING BRACKET

THIS DOCUMENT CONTAINS PROPRIETARY INFORMATION AND SUCH INFORMATION IS NOT TO BE DISCLOSED TO OTHERS FOR ANY PURPOSE NOR USED FOR MANUFACTURING PURPOSE WITHOUT WRITTEN PERMISSION FROM THERMO FISHER SCIENTIFIC

ThermoFisher SCIENTIFIC
BOX 649, MARIETTA, OHIO 45750

MODEL/PART NAME: 8600 UP-RIGHT FREEZER
DWG TITLE: 8605 UP-RIGHT FREEZER ASSEMBLY
DWN: PDK | CAD: PDK | APPD: MAH | DATE: 10-30-02 | SCALE: 0.094
MATERIAL: N/A
PAINT: N/A
TOLERANCE UNLESS OTHERWISE SPECIFIED ANGLES: DECIMAL: .XX=± .XXX=±
DRAWING NUMBER 8602-203-1
SIZE B

Assembly Drawing
Model:
8600 and 5600 Series
-86C ULT Freezer

8602-203-1-B Rev. 4
Page 2 of 2

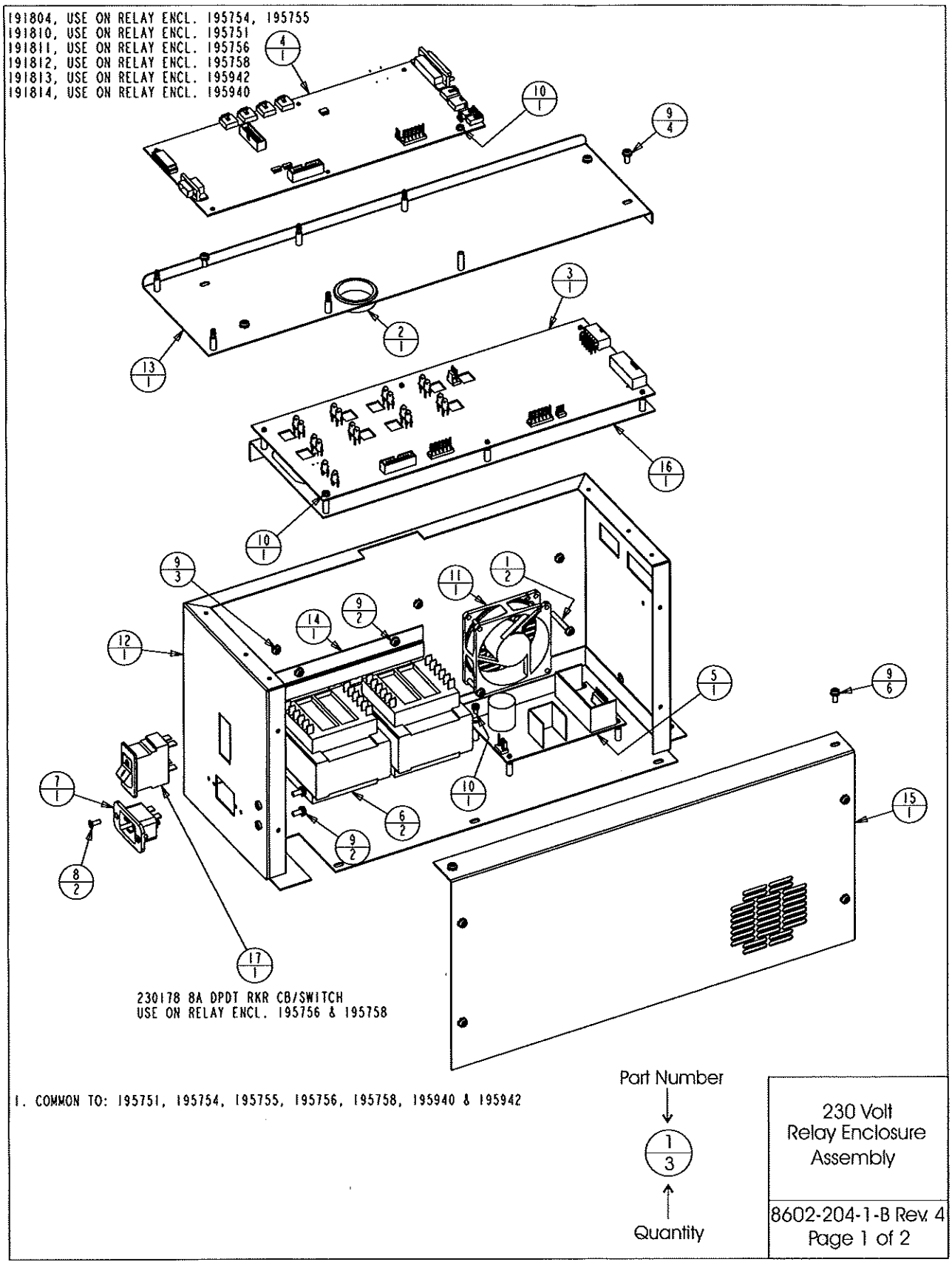
191804, USE ON RELAY ENCL. 195754, 195755
191810, USE ON RELAY ENCL. 195751
191811, USE ON RELAY ENCL. 195756
191812, USE ON RELAY ENCL. 195758
191813, USE ON RELAY ENCL. 195942
191814, USE ON RELAY ENCL. 195940
230178 8A DPDT RKR CB/SWITCH
USE ON RELAY ENCL. 195756 & 195758
1. COMMON TO: 195751, 195754, 195755, 195756, 195758, 195940 & 195942
Part Number
Quantity
230 Volt
Relay Enclosure
Assembly
8602-204-1-B Rev. 4
Page 1 of 2

REV	ECN NO.	DATE	BY	CAD	APPD	DESCRIPTION OF REVISION
0	N/A	12-02-02	PDK	PDK	MAH	RELEASED FOR PRODUCTION
1	FR-1673	03-06-03	DHG	KDG	LDN	MADE COMMON TO 195940 & 195942
2	FR-1789	07-28-04	ADT	KDG	LDN	CHG. MICRO BOARD FOR VACUUM RELIEF
3	PIP-111	08-02-04	TJ	KDG	LDN	REMOVED 114031 GROMMET EDGING
4	FR-1806	08-23-04	JDL	KDG	AKS	SPECIFIED AMPERAGE OF CB SWITCHES

BILL OF MATERIALS

ITEM NO.	PART NO.	PART DESCRIPTION
1	22143	#8-32 x 1-1/4 SS PHP SCREW
2	30077	1-1/2" SNAP BUSHING
3	191658	HIGH VOLTAGE BOARD 230V
4	191804	MICRO BOARD (-86 HIGH END)
5	400165	SWITCHER BOARD
6	420090	175V TRANSFORMER
7	460169	POWER INLET, 16/20A
8	490009	#6-32 X 3/8 SS FHP UC SCREW
9	590020	#8-32 X 3/8 SS PHP EXT SEMS SCREW
10	590027	#6-32 X 1/4 SS PHP EXT SEMS SCREW
11	900134	TUBEAXIAL FAN, 30 CFM, 12V
12	195631-16-1	RELAY ENCLOSURE SPOTWELD SUB-ASSEMBLY
13	195631-16-4	RELAY ENCLOSURE COVER/191656 SUPPORT
14	195631-31-3	TRANSFORMER HOLD DOWN
15	195631-31-5	RELAY ENCLOSURE COVER (MAIN)
16	195730-16-1	191658 SUPPORT BRACKET SUB-ASSEMBLY
17	230184	15A DPDT SWITCH/CIRCUIT BKR

THIS DOCUMENT CONTAINS PROPRIETARY INFORMATION AND SUCH INFORMATION IS NOT TO BE DISCLOSED TO OTHERS FOR ANY PURPOSE NOR USED FOR MANUFACTURING PURPOSE WITHOUT WRITTEN PERMISSION FROM THERMO ELECTRON

MODEL/PART NAME: RELAY ENCLOSURE ASSEMBLY
DWG TITLE: 230 VOLT RELAY ENCLOSURE ASSY (HIGH END)
DWN: DHG | CAD: DHG | APPD: MAH | DATE: 07-26-01 | SCALE: 0.250
MATERIAL: -
PAINT: N/A

230 Volt Relay Enclosure Assembly

Thermo
ELECTRON CORPORATION
Controlled Environment Equipment
Box 649, Marietta, Oh 45750

TOLERANCE UNLESS OTHERWISE SPECIFIED
ANGLES: DECIMAL: .XX=± .XXX=±

DRAWING NUMBER 8602-204-1 | SIZE B

8602-204-1-B Rev. 4
Page 2 of 2

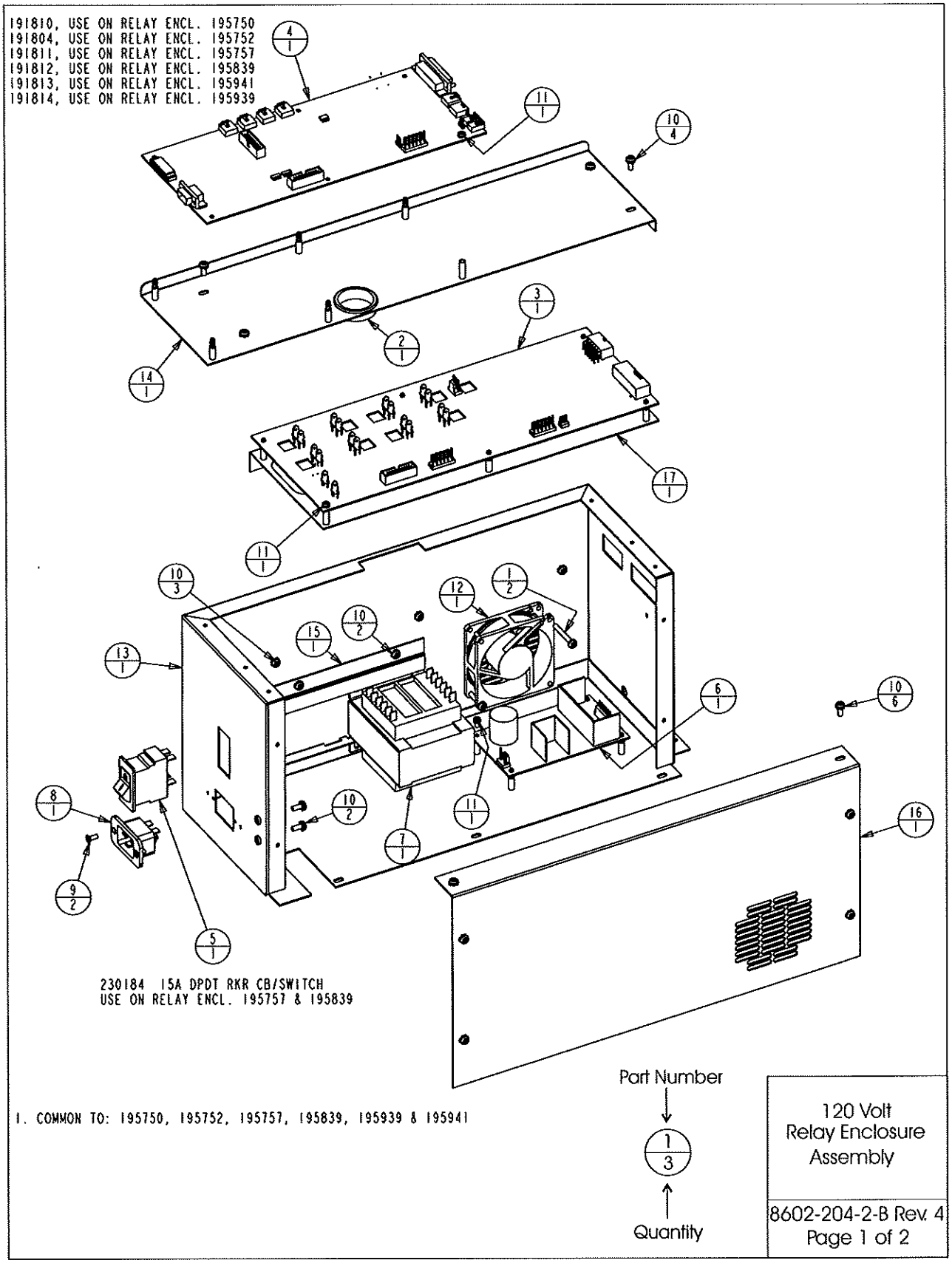
191810, USE ON RELAY ENCL. 195750
191804, USE ON RELAY ENCL. 195752
191811, USE ON RELAY ENCL. 195757
191812, USE ON RELAY ENCL. 195839
191813, USE ON RELAY ENCL. 195941
191814, USE ON RELAY ENCL. 195939
230184 15A DPDT RKR CB/SWITCH
USE ON RELAY ENCL. 195757 & 195839
1. COMMON TO: 195750, 195752, 195757, 195839, 195939 & 195941
Part Number
Quantity
120 Volt
Relay Enclosure
Assembly
8602-204-2-B Rev. 4
Page 1 of 2

REV	ECN NO.	DATE	BY	CAD	APPD	DESCRIPTION OF REVISION
0	N/A	12-02-02	PDK	PDK	MAH	RELEASED FOR PRODUCTION
1	FR-1673	03-06-03	DHG	KDG	KDG	MADE COMMON TO 195939 & 195941
2	FR-1789	07-28-04	ADT	KDG	LDN	CHG. MICRO BOARD FOR VACUUM RELIEF
3	PIP-111	08-02-04	TJ	KDG	LDN	REMOVED 114031 GROMMET EDGING
4	FR-1806	08-23-04	JDL	KDG	AKS	SPECIFIED AMPERAGE OF CB SWITCHES

BILL OF MATERIALS

ITEM NO.	PART NO.	PART DESCRIPTION
1	22143	#8-32 x 1-1/4 SS PHP SCREW
2	30077	1-1/2" SNAP BUSHING
3	191680	HIGH VOLTAGE BOARD 120V
4	191810	MICRO BOARD (-86 LOW END)
5	230183	20A DPDT SWITCH/CIRCUIT BKR
6	400165	SWITCHER BOARD
7	420065	175V TRANSFORMER
8	460169	POWER INLET, 16/20A
9	490009	#6-32 X 3/8 SS FHP UC SCREW
10	590020	#8-32 X 3/8 SS PHP EXT SEMS SCREW
11	590027	#6-32 X 1/4 SS PHP EXT SEMS SCREW
12	900134	TUBEAXIAL FAN, 30 CFM, 12V
13	195631-16-1	RELAY ENCLOSURE SPOTWELD SUB-ASSEMBLY
14	195631-16-4	RELAY ENCLOSURE COVER/191656 SUPPORT
15	195631-31-3	TRANSFORMER HOLD DOWN
16	195631-31-5	RELAY ENCLOSURE COVER (MAIN)
17	195730-16-1	191658 SUPPORT BRACKET SUB-ASSEMBLY

THIS DOCUMENT CONTAINS PROPRIETARY INFORMATION AND SUCH INFORMATION IS NOT TO BE DISCLOSED TO OTHERS FOR ANY PURPOSE NOR USED FOR MANUFACTURING PURPOSE WITHOUT WRITTEN PERMISSION FROM THERMO ELECTRON

MODEL/PART NAME: RELAY ENCLOSURE ASSEMBLY
DWG TITLE: 120 VOLT RELAY ENCLOSURE ASSY (LOW END)
DWN: DHG | CAD: DHG | APPD: MAH | DATE: 07-26-01 | SCALE: 0.250
MATERIAL: -
PAINT: N/A

120 Volt Relay Enclosure Assembly

Thermo
ELECTRON CORPORATION
Controlled Environment Equipment
Box 649, Marietta, Oh 45750

TOLERANCE UNLESS OTHERWISE SPECIFIED
ANGLES: DECIMAL: .XX=± .XXX=±

DRAWING NUMBER 8602-204-2 | SIZE B

8602-204-2-B Rev. 4
Page 2 of 2

Section 9 Refrigeration Schematics

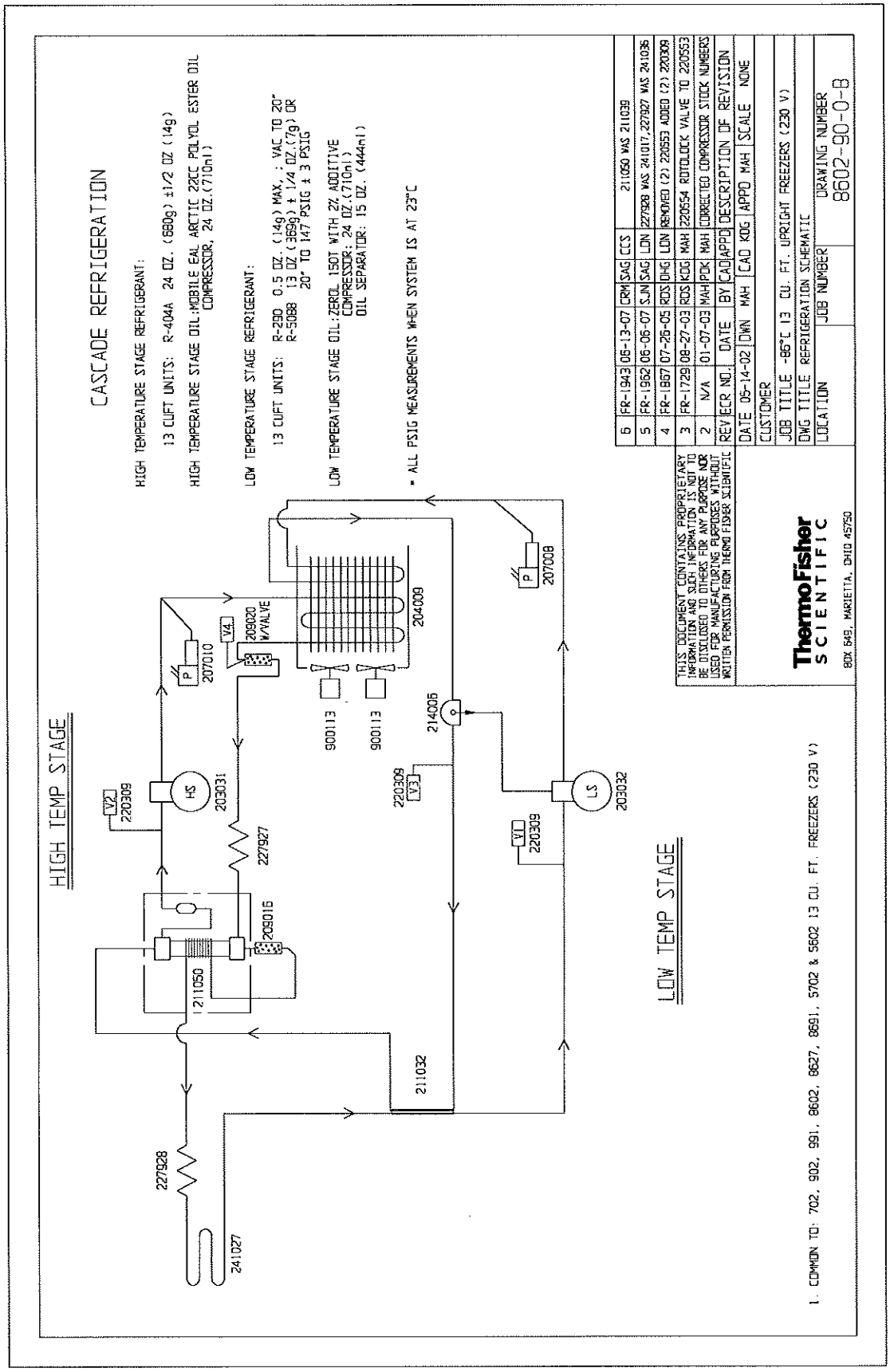
CASCADE REFRIGERATION
HIGH TEMPERATURE STAGE REFRIGERANT:
13 CUFT UNITS: R-404A 24 OZ. (680g) ±1/2 OZ (14g)
HIGH TEMPERATURE STAGE OIL:MOBILE EAL ARCTIC 22CC POLYOL ESTER OIL COMPRESSOR, 24 OZ.(710ml)
LOW TEMPERATURE STAGE REFRIGERANT:
13 CUFT UNITS: R-290 0.5 OZ. (14g) MAX, ; VAC TO 20"
R-508B 13 OZ (369g) ± 1/4 OZ.(7g) OR 20" TO 147 PSIG ± 3 PSIG
LOW TEMPERATURE STAGE OIL:ZEROL 150T WITH 2% ADDITIVE COMPRESSOR: 24 OZ.(710ml) OIL SEPARATOR: 15 OZ. (444ml)
* ALL PSIG MEASUREMENTS WHEN SYSTEM IS AT 23°C
HIGH TEMP STAGE
LOW TEMP STAGE
HS
LS
203031
203032
227927
227928
241027
211050
209015
211032
V2
220309
V4
209020
W/VALVE
P
207010
204009
900113
900113
214006
220309
V3
V1
220309
P
207008
THIS DOCUMENT CONTAINS PROPRIETARY INFORMATION AND SUCH INFORMATION IS NOT TO BE DISCLOSED TO OTHERS FOR ANY PURPOSE NOR USED FOR MANUFACTURING PURPOSES WITHOUT WRITTEN PERMISSION FROM THERMO FISHER SCIENTIFIC
ThermoFisher SCIENTIFIC
BOX 649, MARIETTA, OHIO 45750
REV ECR NO. DATE BY CAD APPD DESCRIPTION OF REVISION
6 FR-1943 06-13-07 CRM SAG CCS 211050 WAS 211039
5 FR-1962 06-06-07 SJN SAG LDN 227928 WAS 241017,227927 WAS 241036
4 FR-1867 07-26-05 RDS DHG LDN REMOVED (2) 220553 ADDED (2) 220309
3 FR-1729 08-27-03 RDS KDG MAH 220554 ROTOLOCK VALVE TO 220553
2 N/A 01-07-03 MAH PDK MAH CORRECTED COMPRESSOR STOCK NUMBERS
DATE 05-14-02 DWN MAH CAD KDG APPD MAH SCALE NONE
CUSTOMER
JOB TITLE -86°C 13 CU. FT. UPRIGHT FREEZERS (230 V)
DWG TITLE REFRIGERATION SCHEMATIC
LOCATION JOB NUMBER DRAWING NUMBER 8602-90-0-B
1. COMMON TO: 702, 902, 991, 8602, 8627, 8691, 5702 & 5602 13 CU. FT. FREEZERS (230 V)

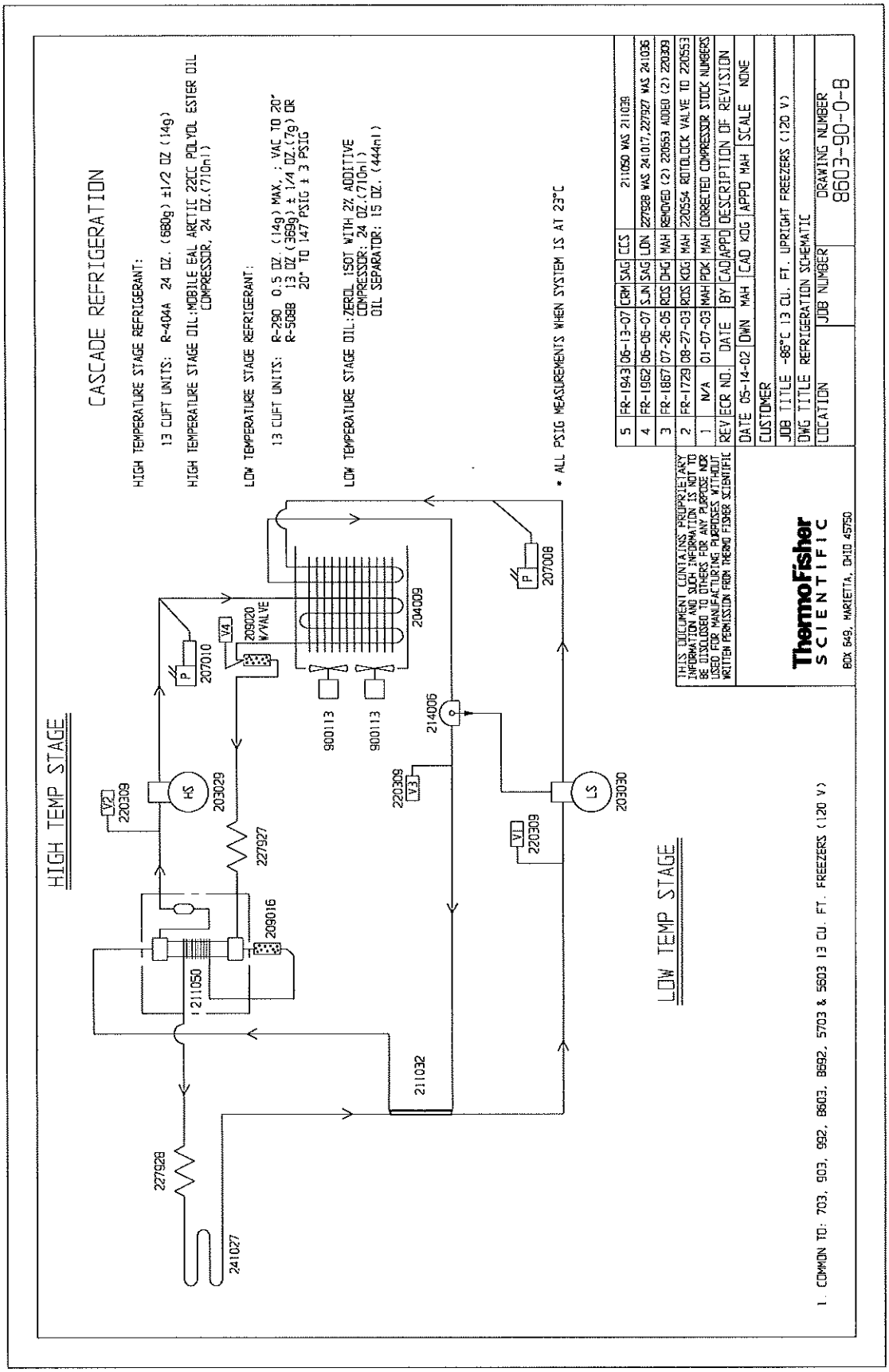
CASCADE REFRIGERATION
HIGH TEMPERATURE STAGE REFRIGERANT:
13 CUFT UNITS: R-404A 24 OZ. (680g) ±1/2 OZ (14g)
HIGH TEMPERATURE STAGE OIL:MOBILE EAL ARCTIC 22CC POLYOL ESTER OIL
COMPRESSOR, 24 OZ.(710ml)
LOW TEMPERATURE STAGE REFRIGERANT:
13 CUFT UNITS: R-290 0.5 OZ. (14g) MAX, ; VAC TO 20"
R-508B 13 OZ (369g) ± 1/4 OZ.(7g) OR
20" TO 147"PSIG ± 3 PSIG
LOW TEMPERATURE STAGE OIL:ZEROL 150T WITH 2% ADDITIVE
COMPRESSOR: 24 OZ.(710ml)
OIL SEPARATOR: 15 OZ. (444ml)
* ALL PSIG MEASUREMENTS WHEN SYSTEM IS AT 23°C
HIGH TEMP STAGE
LOW TEMP STAGE
V2 220309
HS 203029
P 207010
V4 209020 W/VALVE
227927
209016
211050
227928
241027
900113
900113
204009
211032
220309 V3
214006
P
V1 220309
LS 203030
P 207008
5 FR-1943 06-13-07 CRM SAG CCS 211050 WAS 211039
4 FR-1962 06-06-07 SJM SAG LDN 227928 WAS 241017,227927 WAS 241036
3 FR-1867 07-26-05 RDS DHG MAH REMOVED (2) 220553 ADDED (2) 220309
2 FR-1729 08-27-03 RDS KDG MAH 220554 ROTOLOCK VALVE TO 220553
1 N/A 01-07-03 MAH PDK MAH CORRECTED COMPRESSOR STOCK NUMBERS
REV ECR NO. DATE BY CAD APPD DESCRIPTION OF REVISION
DATE 05-14-02 DWN MAH CAD KDG APPD MAH SCALE NONE
CUSTOMER
JOB TITLE -86°C 13 CU. FT. UPRIGHT FREEZERS (120 V)
DWG TITLE REFRIGERATION SCHEMATIC
LOCATION JOB NUMBER DRAWING NUMBER
8603-90-0-B
THIS DOCUMENT CONTAINS PROPRIETARY INFORMATION AND SUCH INFORMATION IS NOT TO BE DISCLOSED TO OTHERS FOR ANY PURPOSE NOR USED FOR MANUFACTURING PURPOSES WITHOUT WRITTEN PERMISSION FROM THERMO FISHER SCIENTIFIC
ThermoFisher SCIENTIFIC
BOX 649, MARIETTA, OHIO 45750
1. COMMON TO: 703, 903, 992, 8603, 8692, 5703 & 5603 13 CU. FT. FREEZERS (120 V)

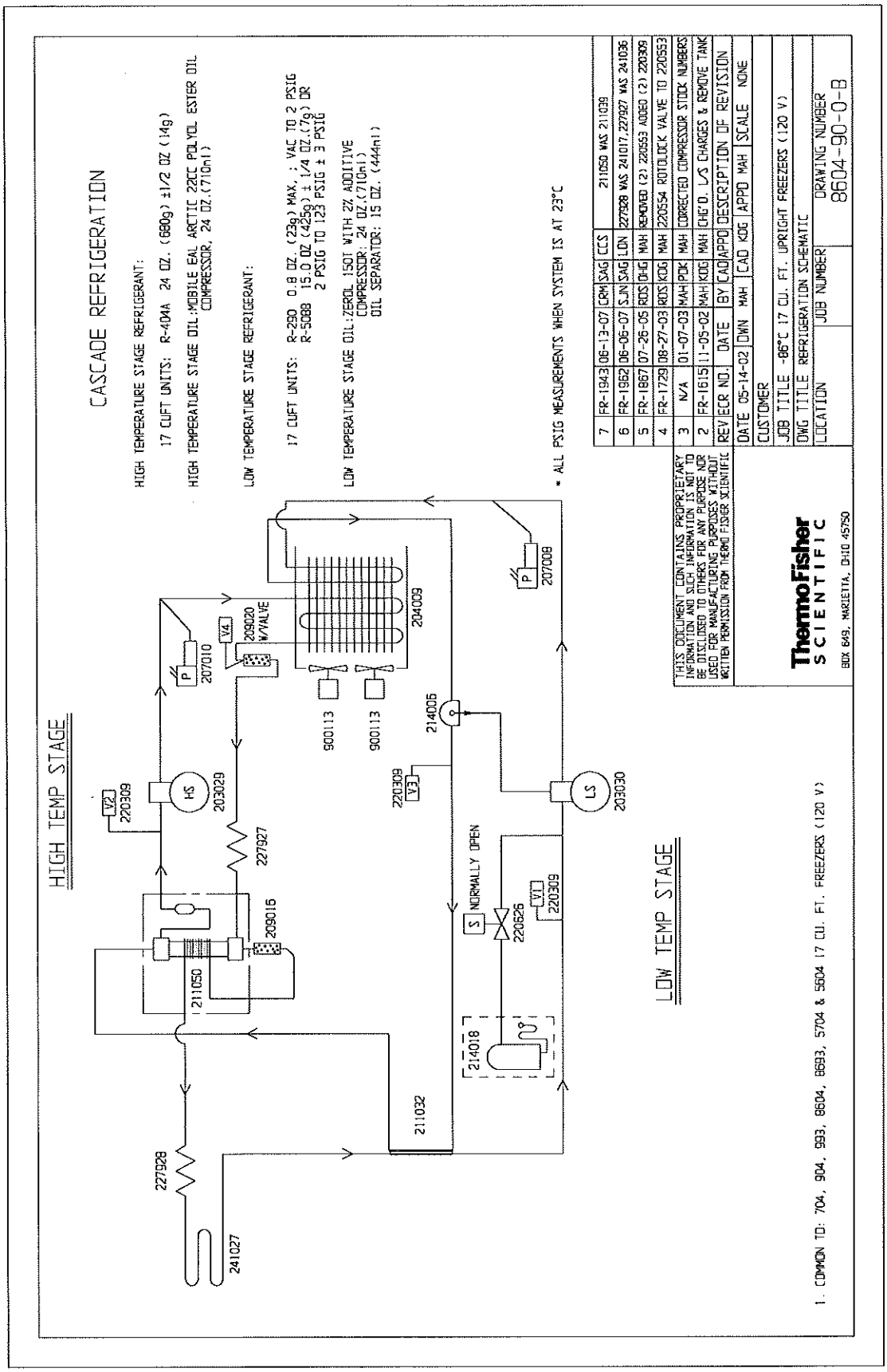
CASCADE REFRIGERATION
HIGH TEMPERATURE STAGE REFRIGERANT:
17 CUFT UNITS: R-404A 24 OZ. (680g) ±1/2 OZ (14g)
HIGH TEMPERATURE STAGE OIL:MOBILE EAL ARCTIC 22CC POLYOL ESTER OIL
COMPRESSOR, 24 OZ.(710ml)
LOW TEMPERATURE STAGE REFRIGERANT:
17 CUFT UNITS: R-290 0.8 OZ. (23g) MAX. ; VAC TO 2 PSIG
R-508B 15.0 OZ (425g) ± 1/4 OZ.(7g) OR
2 PSIG TO 123 PSIG ± 3 PSIG
LOW TEMPERATURE STAGE OIL:ZEROL 150T WITH 2% ADDITIVE
COMPRESSOR: 24 OZ.(710ml)
OIL SEPARATOR: 15 OZ. (444ml)
* ALL PSIG MEASUREMENTS WHEN SYSTEM IS AT 23°C
HIGH TEMP STAGE
LOW TEMP STAGE
HS
LS
P
V1
V2
V3
V4
S
NORMALLY OPEN
W/VALVE
1. COMMON TO: 704, 904, 993, 8604, 8693, 5704 & 5604 17 CU. FT. FREEZERS (120 V)
THIS DOCUMENT CONTAINS PROPRIETARY INFORMATION AND SUCH INFORMATION IS NOT TO BE DISCLOSED TO OTHERS FOR ANY PURPOSE NOR USED FOR MANUFACTURING PURPOSES WITHOUT WRITTEN PERMISSION FROM THERMO FISHER SCIENTIFIC
ThermoFisher SCIENTIFIC
BOX 649, MARIETTA, OHIO 45750
REV ECR NO. DATE BY CAD APPD DESCRIPTION OF REVISION
7 FR-1943 06-13-07 CRM SAG CCS 211050 WAS 211039
6 FR-1952 06-05-07 SJN SAG LDN 227928 WAS 241017,227927 WAS 241036
5 FR-1867 07-26-05 RDS DHG MAH REMOVED (2) 220553 ADDED (2) 220309
4 FR-1729 08-27-03 RDS KDG MAH 220554 ROTOLOCK VALVE TO 220553
3 N/A 01-07-03 MAH PDK MAH CORRECTED COMPRESSOR STOCK NUMBERS
2 FR-1615 11-05-02 MAH KDG MAH CHG'D. L/S CHARGES & REMOVE TANK
DATE 05-14-02 DWN MAH CAD KDG APPD MAH SCALE NONE
CUSTOMER
JOB TITLE -86°C 17 CU. FT. UPRIGHT FREEZERS (120 V)
DWG TITLE REFRIGERATION SCHEMATIC
LOCATION JOB NUMBER DRAWING NUMBER
8604-90-0-B

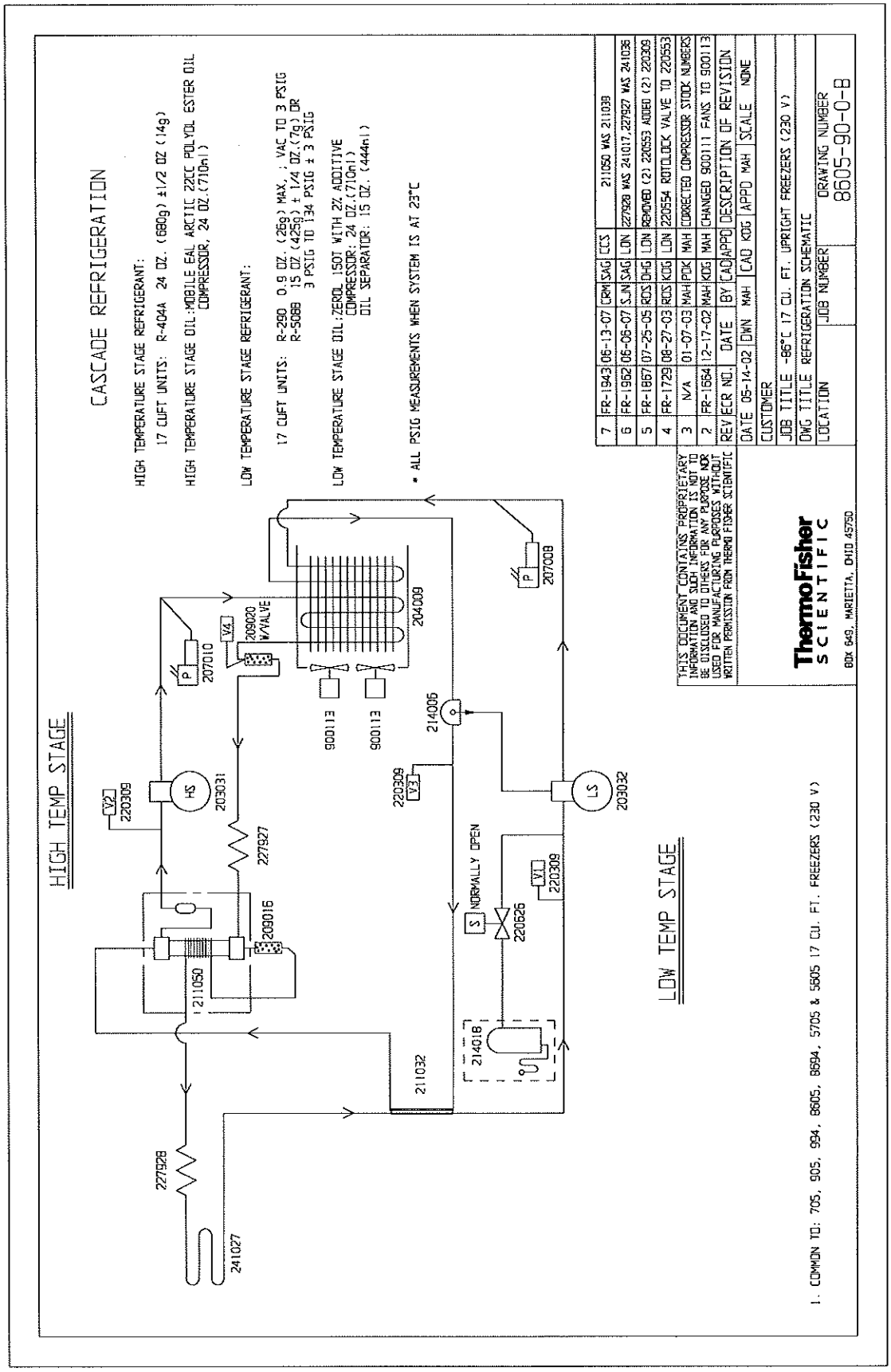
CASCADE REFRIGERATION
HIGH TEMPERATURE STAGE REFRIGERANT:
17 CUFT UNITS: R-404A 24 OZ. (680g) ±1/2 OZ (14g)
HIGH TEMPERATURE STAGE OIL:MOBILE EAL ARCTIC 22CC POLYOL ESTER OIL
COMPRESSOR, 24 OZ.(710ml)
LOW TEMPERATURE STAGE REFRIGERANT:
17 CUFT UNITS: R-290 0.9 OZ. (26g) MAX. ; VAC TO 3 PSIG
R-508B 15 OZ.(425g) ± 1/4 OZ.(7g) OR
3 PSIG TO 134 PSIG ± 3 PSIG
LOW TEMPERATURE STAGE OIL:ZEROL 150T WITH 2% ADDITIVE
COMPRESSOR: 24 OZ.(710ml)
OIL SEPARATOR: 15 OZ. (444ml)
* ALL PSIG MEASUREMENTS WHEN SYSTEM IS AT 23°C
HIGH TEMP STAGE
LOW TEMP STAGE
HS
LS
P
V2
220309
V4
209020
W/VALVE
V3
220309
V1
220309
S
NORMALLY OPEN
220626
214016
211032
211050
209016
227927
227928
241027
204009
900113
900113
214006
207010
207008
203031
203032
THIS DOCUMENT CONTAINS PROPRIETARY INFORMATION AND SUCH INFORMATION IS NOT TO BE DISCLOSED TO OTHERS FOR ANY PURPOSE NOR USED FOR MANUFACTURING PURPOSES WITHOUT WRITTEN PERMISSION FROM THERMO FISHER SCIENTIFIC
ThermoFisher SCIENTIFIC
BOX 649, MARIETTA, OHIO 45750
7 FR-1943 06-13-07 CRM SAG CCS 211050 WAS 211039
6 FR-1962 06-06-07 SJN SAG LDN 227928 WAS 241017,227927 WAS 241036
5 FR-1867 07-25-05 RDS DHG LDN REMOVED (2) 220653 ADDED (2) 220309
4 FR-1729 08-27-03 RDS KDG LDN 220654 ROTOLOCK VALVE TO 220553
3 N/A 01-07-03 MAH PDK MAH CORRECTED COMPRESSOR STOCK NUMBERS
2 FR-1664 12-17-02 MAH KDG MAH CHANGED 900111 FANS TO 900113
REV ECR NO. DATE BY CAD APPD DESCRIPTION OF REVISION
DATE 05-14-02 DWN MAH CAD KDG APPD MAH SCALE NONE
CUSTOMER
DWG TITLE -86°C 17 CU. FT. UPRIGHT FREEZERS (230 V)
LOCATION JOB NUMBER
DWG TITLE REFRIGERATION SCHEMATIC
DRAWING NUMBER
8605-90-0-B
1. COMMON TO: 705, 905, 994, 8605, 8694, 5705 & 5605 17 CU. FT. FREEZERS (230 V)

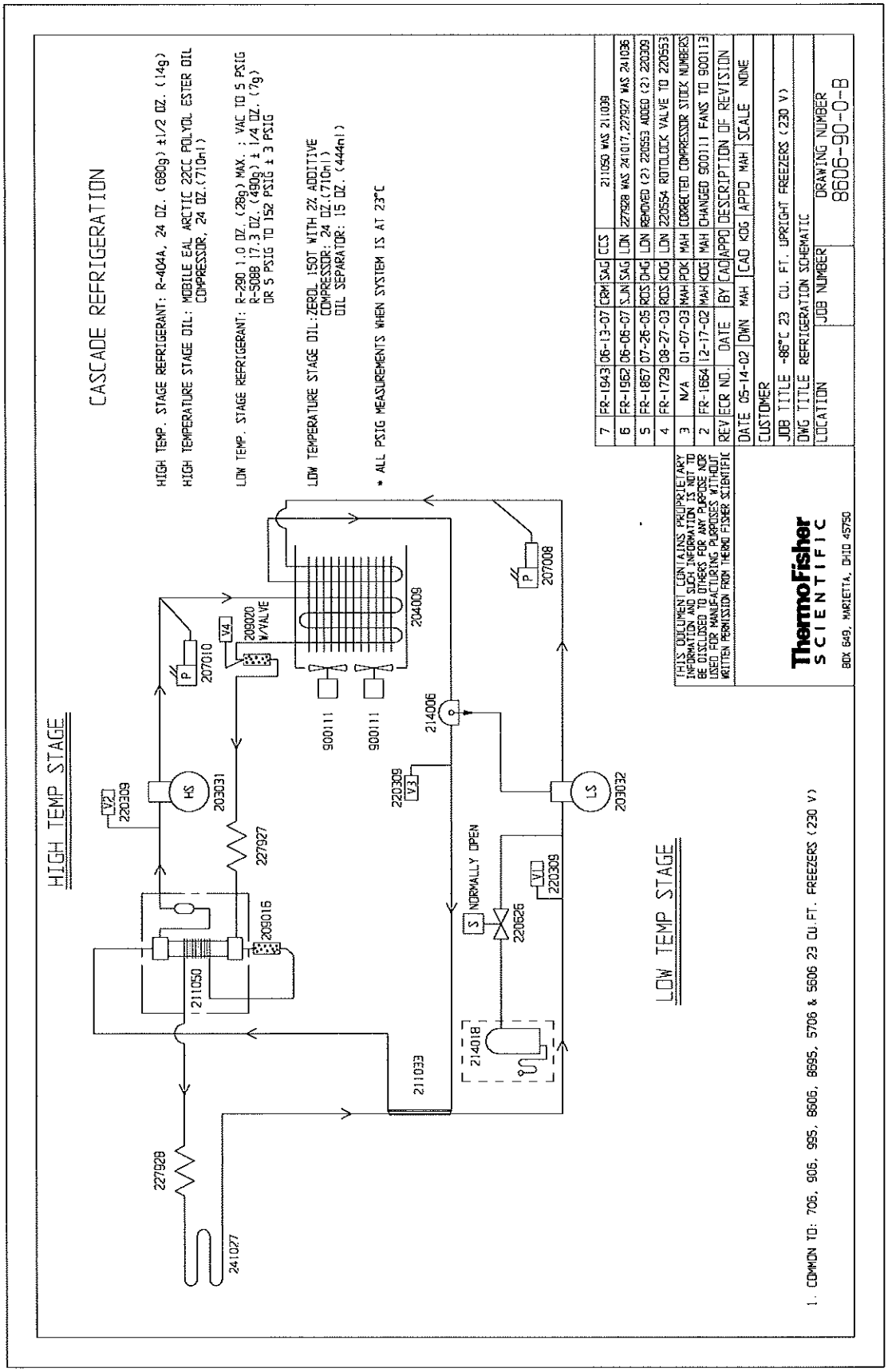
CASCADE REFRIGERATION
HIGH TEMP. STAGE REFRIGERANT: R-404A, 24 OZ. (680g) ±1/2 OZ. (14g)
HIGH TEMPERATURE STAGE OIL: MOBILE EAL ARCTIC 22CC POLYOL ESTER OIL COMPRESSOR, 24 OZ.(710ml)
LOW TEMP. STAGE REFRIGERANT: R-290 1.0 OZ. (28g) MAX. ; VAC TO 5 PSIG
R-508B 17.3 OZ. (490g) ± 1/4 OZ. (7g)
OR 5 PSIG TO 152 PSIG ± 3 PSIG
LOW TEMPERATURE STAGE OIL: ZEROL 150T WITH 2% ADDITIVE
COMPRESSOR: 24 OZ.(710ml)
OIL SEPARATOR: 15 OZ. (444ml)
* ALL PSIG MEASUREMENTS WHEN SYSTEM IS AT 23°C
HIGH TEMP STAGE
LOW TEMP STAGE
HS
LS
P
V1
V2
V3
V4
S
NORMALLY OPEN
900111
900111
204009
207008
207010
209020 W/VALVE
203031
203032
227927
227928
241027
211050
209016
211033
214018
214006
220309
220626
THIS DOCUMENT CONTAINS PROPRIETARY INFORMATION AND SUCH INFORMATION IS NOT TO BE DISCLOSED TO OTHERS FOR ANY PURPOSE NOR USED FOR MANUFACTURING PURPOSES WITHOUT WRITTEN PERMISSION FROM THERMO FISHER SCIENTIFIC
ThermoFisher SCIENTIFIC
BOX 649, MARIETTA, OHIO 45750
REV ECR NO. DATE BY CAD APPD DESCRIPTION OF REVISION
7 FR-1943 06-13-07 CRM SAG CCS 211050 WAS 211039
6 FR-1962 06-06-07 SJN SAG LDN 227928 WAS 241017, 227927 WAS 241036
5 FR-1867 07-26-05 RDS DHG LDN REMOVED (2) 220553 ADDED (2) 220309
4 FR-1729 08-27-03 RDS KDG LDN 220554 ROTOLOCK VALVE TO 220553
3 N/A 01-07-03 MAH POK MAH CORRECTED COMPRESSOR STOCK NUMBERS
2 FR-1664 12-17-02 MAH KDG MAH CHANGED 900111 FANS TO 900113
DATE 05-14-02 DWN MAH CAD KDG APPD MAH SCALE NONE
CUSTOMER
JOB TITLE -86°C 23 CU. FT. UPRIGHT FREEZERS (230 V)
DWG TITLE REFRIGERATION SCHEMATIC
LOCATION JOB NUMBER DRAWING NUMBER 8606-90-0-B
1. COMMON TO: 706, 906, 995, 8605, 8695, 5706 & 5606 23 CU.FT. FREEZERS (230 V)

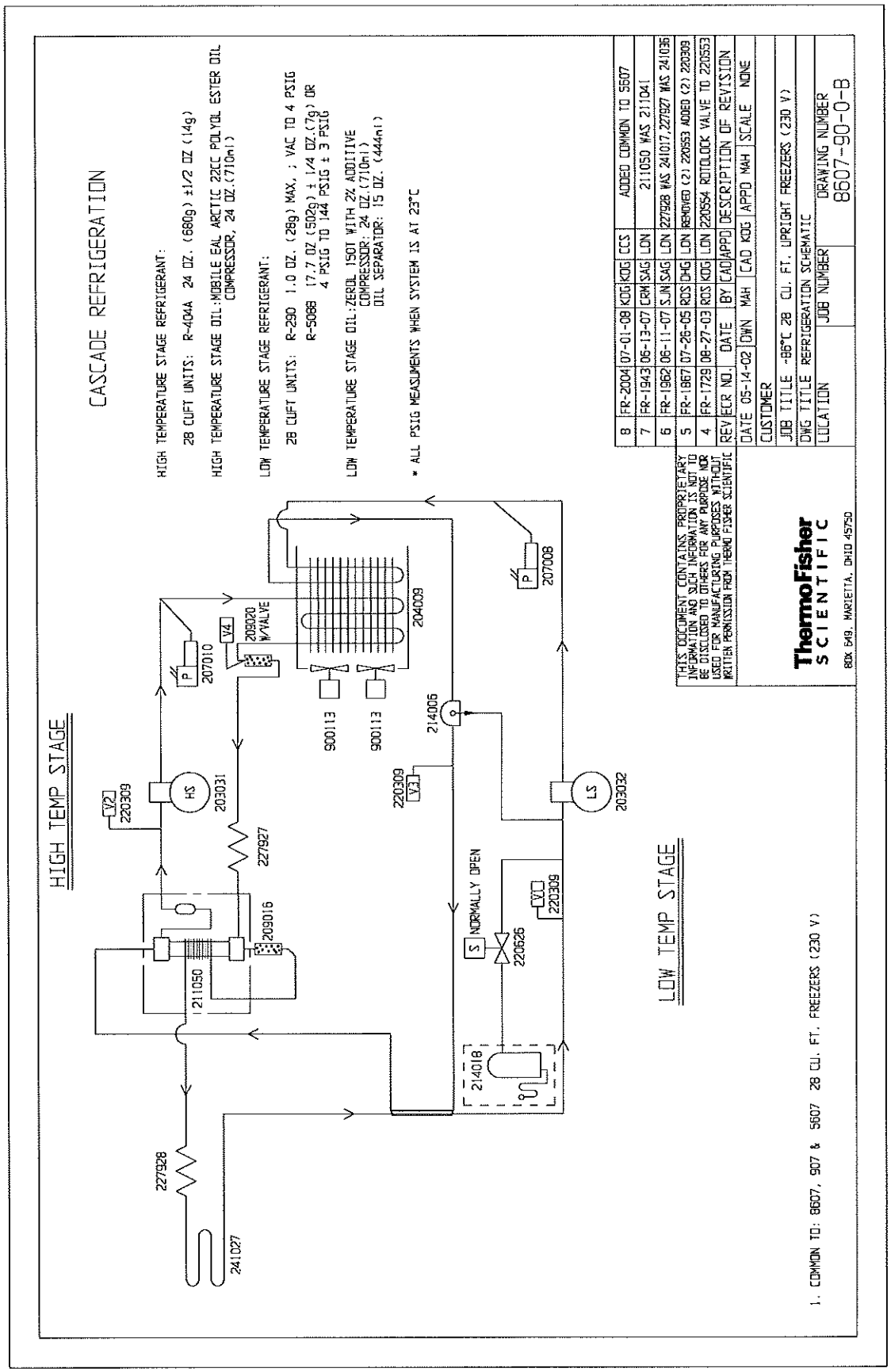
CASCADE REFRIGERATION
HIGH TEMPERATURE STAGE REFRIGERANT:
2B CUFT UNITS: R-404A 24 OZ. (680g) ±1/2 OZ (14g)
HIGH TEMPERATURE STAGE OIL:MOBILE EAL ARCTIC 22CC POLYOL ESTER OIL
COMPRESSOR, 24 OZ.(710ml)
LOW TEMPERATURE STAGE REFRIGERANT:
2B CUFT UNITS: R-290 1.0 OZ. (28g) MAX. ; VAC TO 4 PSIG
R-508B (7.7 OZ (502g) ± 1/4 OZ.(7g) OR
4 PSIG TO 144 PSIG ± 3 PSIG
LOW TEMPERATURE STAGE OIL:ZEROL 150T WITH 2% ADDITIVE
COMPRESSOR: 24 OZ.(710ml)
OIL SEPARATOR: 15 OZ. (444ml)
* ALL PSIG MEASUMENTS WHEN SYSTEM IS AT 23°C
HIGH TEMP STAGE
LOW TEMP STAGE
HS
LS
P
V2
220309
V4
209020
W/VALVE
207010
203031
227927
209016
211050
227928
241027
900113
900113
204009
214006
220309
V3
NORMALLY OPEN
S
220626
V1
220309
214018
20700B
203032
8 FR-2004 07-01-08 KDG KDG CCS ADDED COMMON TO 5607
7 FR-1943 06-13-07 CRM SAG LDN 211050 WAS 211041
6 FR-1962 06-11-07 S.JN SAG LDN 227928 WAS 241017,227927 WAS 241035
5 FR-1867 07-26-05 RDS DHG LDN REMOVED (2) 220553 ADDED (2) 220309
4 FR-1729 08-27-03 RDS KDG LDN 220554 ROTOLOCK VALVE TO 220553
REV ECR NO. DATE BY CAD APPD DESCRIPTION OF REVISION
DATE 05-14-02 DWN MAH CAD KDG APPD MAH SCALE NONE
CUSTOMER
JOB TITLE -86°C 2B CU. FT. UPRIGHT FREEZERS (230 V)
DWG TITLE REFRIGERATION SCHEMATIC
LOCATION JOB NUMBER DRAWING NUMBER
8607-90-0-B
THIS DOCUMENT CONTAINS PROPRIETARY INFORMATION AND SUCH INFORMATION IS NOT TO BE DISCLOSED TO OTHERS FOR ANY PURPOSE NOR USED FOR MANUFACTURING PURPOSES WITHOUT WRITTEN PERMISSION FROM THERMO FISHER SCIENTIFIC
ThermoFisher SCIENTIFIC
BOX 649, MARIETTA, OHIO 45750
1. COMMON TO: 8607, 907 & 5607 2B CU. FT. FREEZERS (230 V)

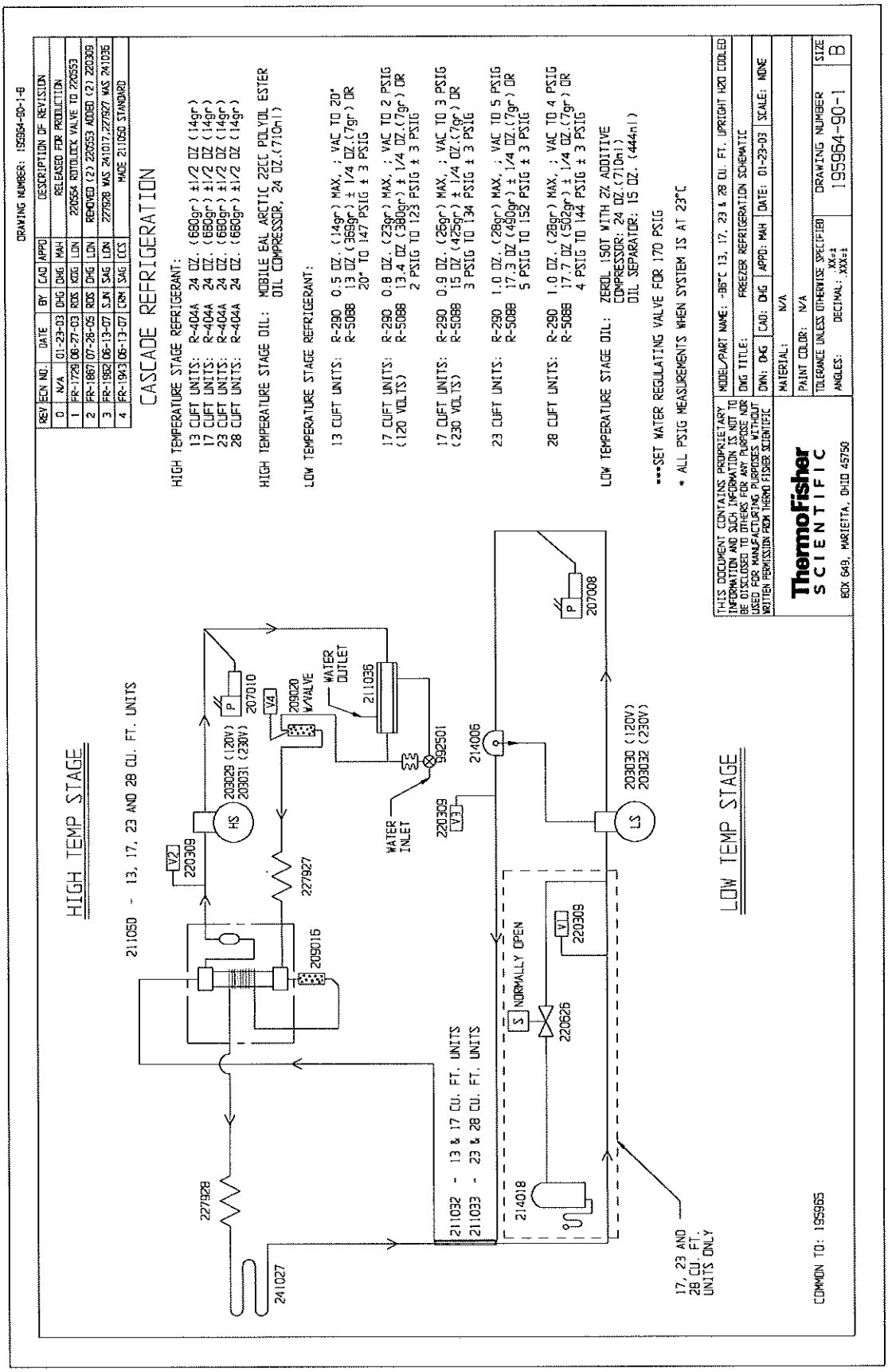
DRAWING NUMBER: 195964-90-1-B
REV ECN NO. DATE BY CAD APPD DESCRIPTION OF REVISION
0 N/A 01-23-03 DHG DHG MAH RELEASED FOR PRODUCTION
1 FR-1729 06-27-03 RDS KDG LDN 220554 ROTOLOCK VALVE TO 220553
2 FR-1867 07-28-05 RDS DHG LDN REMOVED (2) 220553 ADDED (2) 220309
3 FR-1962 06-13-07 SJN SAG LDN 227928 WAS 241017,227927 WAS 241036
4 FR-1943 06-13-07 CRM SAG CCS MADE 211050 STANDARD
CASCADE REFRIGERATION
HIGH TEMPERATURE STAGE REFRIGERANT:
13 CUFT UNITS: R-404A 24 OZ. (660gr) ±1/2 OZ (14gr)
17 CUFT UNITS: R-404A 24 OZ. (660gr) ±1/2 OZ (14gr)
23 CUFT UNITS: R-404A 24 OZ. (660gr) ±1/2 OZ (14gr)
28 CUFT UNITS: R-404A 24 OZ. (660gr) ±1/2 OZ (14gr)
HIGH TEMPERATURE STAGE OIL: MOBILE EAL ARCTIC 22CC POLYOL ESTER OIL COMPRESSOR, 24 OZ.(710ml)
LOW TEMPERATURE STAGE REFRIGERANT:
13 CUFT UNITS: R-290 0.5 OZ. (14gr) MAX. ; VAC TO 20" R-508B 13 OZ (369gr) ± 1/4 OZ.(7gr) OR 20" TO 147 PSIG ± 3 PSIG
17 CUFT UNITS: R-290 0.8 OZ. (23gr) MAX. ; VAC TO 2 PSIG (120 VOLTS) R-508B 13.4 OZ (380gr) ± 1/4 OZ.(7gr) OR 2 PSIG TO 123 PSIG ± 3 PSIG
17 CUFT UNITS: R-290 0.9 OZ. (26gr) MAX. ; VAC TO 3 PSIG (230 VOLTS) R-508B 15 OZ (425gr) ± 1/4 OZ.(7gr) OR 3 PSIG TO 134 PSIG ± 3 PSIG
23 CUFT UNITS: R-290 1.0 OZ. (28gr) MAX. ; VAC TO 5 PSIG R-508B 17.3 OZ (490gr) ± 1/4 OZ.(7gr) OR 5 PSIG TO 152 PSIG ± 3 PSIG
28 CUFT UNITS: R-290 1.0 OZ. (28gr) MAX. ; VAC TO 4 PSIG R-508B 17.7 OZ (502gr) ± 1/4 OZ.(7gr) OR 4 PSIG TO 144 PSIG ± 3 PSIG
LOW TEMPERATURE STAGE OIL: ZEROL 150T WITH 2% ADDITIVE COMPRESSOR: 24 OZ.(710ml) OIL SEPARATOR: 15 OZ. (444ml)
***SET WATER REGULATING VALVE FOR 170 PSIG
* ALL PSIG MEASUREMENTS WHEN SYSTEM IS AT 23°C
THIS DOCUMENT CONTAINS PROPRIETARY INFORMATION AND SUCH INFORMATION IS NOT TO BE DISCLOSED TO OTHERS FOR ANY PURPOSE NOR USED FOR MANUFACTURING PURPOSES WITHOUT WRITTEN PERMISSION FROM THERMO FISHER SCIENTIFIC
MODEL/PART NAME: -86°C 13, 17, 23 & 28 CU. FT. UPRIGHT H2O COOLED
DWG TITLE: FREEZER REFRIGERATION SCHEMATIC
DWN: DHG CAD: DHG APPD: MAH DATE: 01-23-03 SCALE: NONE
MATERIAL: N/A
PAINT COLOR: N/A
TOLERANCE UNLESS OTHERWISE SPECIFIED
ANGLES: DECIMAL: .XX±1 .XXX±1
DRAWING NUMBER 195964-90-1
SIZE B
ThermoFisher SCIENTIFIC
BOX 649, MARIETTA, OHIO 45750
HIGH TEMP STAGE
211050 - 13, 17, 23 AND 28 CU. FT. UNITS
LOW TEMP STAGE
211032 - 13 & 17 CU. FT. UNITS
211033 - 23 & 28 CU. FT. UNITS
17, 23 AND 28 CU. FT. UNITS ONLY
NORMALLY OPEN
WATER OUTLET
WATER INLET
COMMON TO: 195965

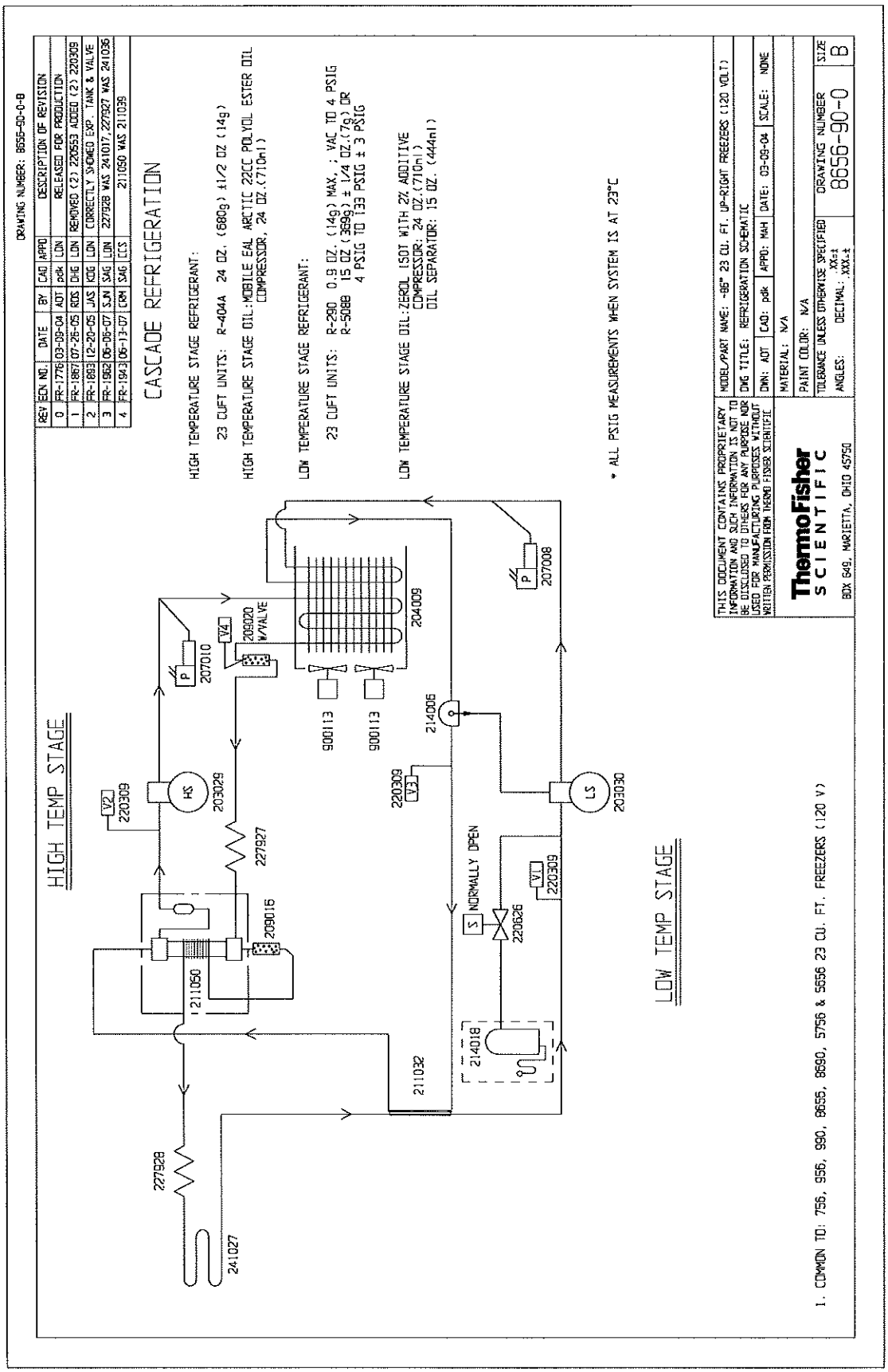
DRAWING NUMBER: 8655-90-0-B
REV | ECN NO. | DATE | BY | CAD | APPD | DESCRIPTION OF REVISION
0 | FR-1776 | 03-09-04 | AOT | pdk | LDN | RELEASED FOR PRODUCTION
1 | FR-1867 | 07-26-05 | RDS | DHG | LDN | REMOVED (2) 220553 ADDED (2) 220309
2 | FR-1893 | 12-20-05 | JAS | KDG | LDN | CORRECTLY SHOWED EXP. TANK & VALVE
3 | FR-1982 | 06-06-07 | SJM | SAG | LDN | 227928 WAS 241017, 227927 WAS 241036
4 | FR-1943 | 05-13-07 | CRM | SAG | CCS | 211050 WAS 211039
CASCADE REFRIGERATION
HIGH TEMPERATURE STAGE REFRIGERANT:
23 CUFT UNITS: R-404A 24 OZ. (680g) ±1/2 OZ (14g)
HIGH TEMPERATURE STAGE OIL: MOBILE EAL ARCTIC 22CC POLYOL ESTER OIL
COMPRESSOR, 24 OZ.(710ml)
LOW TEMPERATURE STAGE REFRIGERANT:
23 CUFT UNITS: R-290 0.9 OZ. (14g) MAX. ; VAC TO 4 PSIG
R-508B 15 OZ (3699) ± 1/4 OZ.(7g) OR
4 PSIG TO 133 PSIG ± 3 PSIG
LOW TEMPERATURE STAGE OIL: ZEROL 150T WITH 2% ADDITIVE
COMPRESSOR: 24 OZ.(710ml)
OIL SEPARATOR: 15 OZ. (444ml)
* ALL PSIG MEASUREMENTS WHEN SYSTEM IS AT 23°C
HIGH TEMP STAGE
LOW TEMP STAGE
V2 220309
HS 203029
227927
209016
211050
P 207010
V4 209020 W/VALVE
900113
900113
204009
214006
220309 V3
P 207008
LS 203030
NORMALLY OPEN
S 220626
V1 220309
214018
211032
227928
241027
THIS DOCUMENT CONTAINS PROPRIETARY INFORMATION AND SUCH INFORMATION IS NOT TO BE DISCLOSED TO OTHERS FOR ANY PURPOSE NOR USED FOR MANUFACTURING PURPOSES WITHOUT WRITTEN PERMISSION FROM THERMO FISHER SCIENTIFIC
MODEL/PART NAME: -95" 23 CU. FT. UP-RIGHT FREEZERS (120 VOLT)
DWG TITLE: REFRIGERATION SCHEMATIC
DWN: AOT | CAD: pdk | APPD: MAH | DATE: 03-09-04 | SCALE: NONE
MATERIAL: N/A
PAINT COLOR: N/A
TOLERANCE UNLESS OTHERWISE SPECIFIED
ANGLES: DECIMAL: .XX±.1 .XXX±.
DRAWING NUMBER 8656-90-0
SIZE B
ThermoFisher SCIENTIFIC
BOX 649, MARIETTA, OHIO 45750
1. COMMON TO: 756, 956, 990, 8655, 8690, 5756 & 5656 23 CU. FT. FREEZERS (120 V)

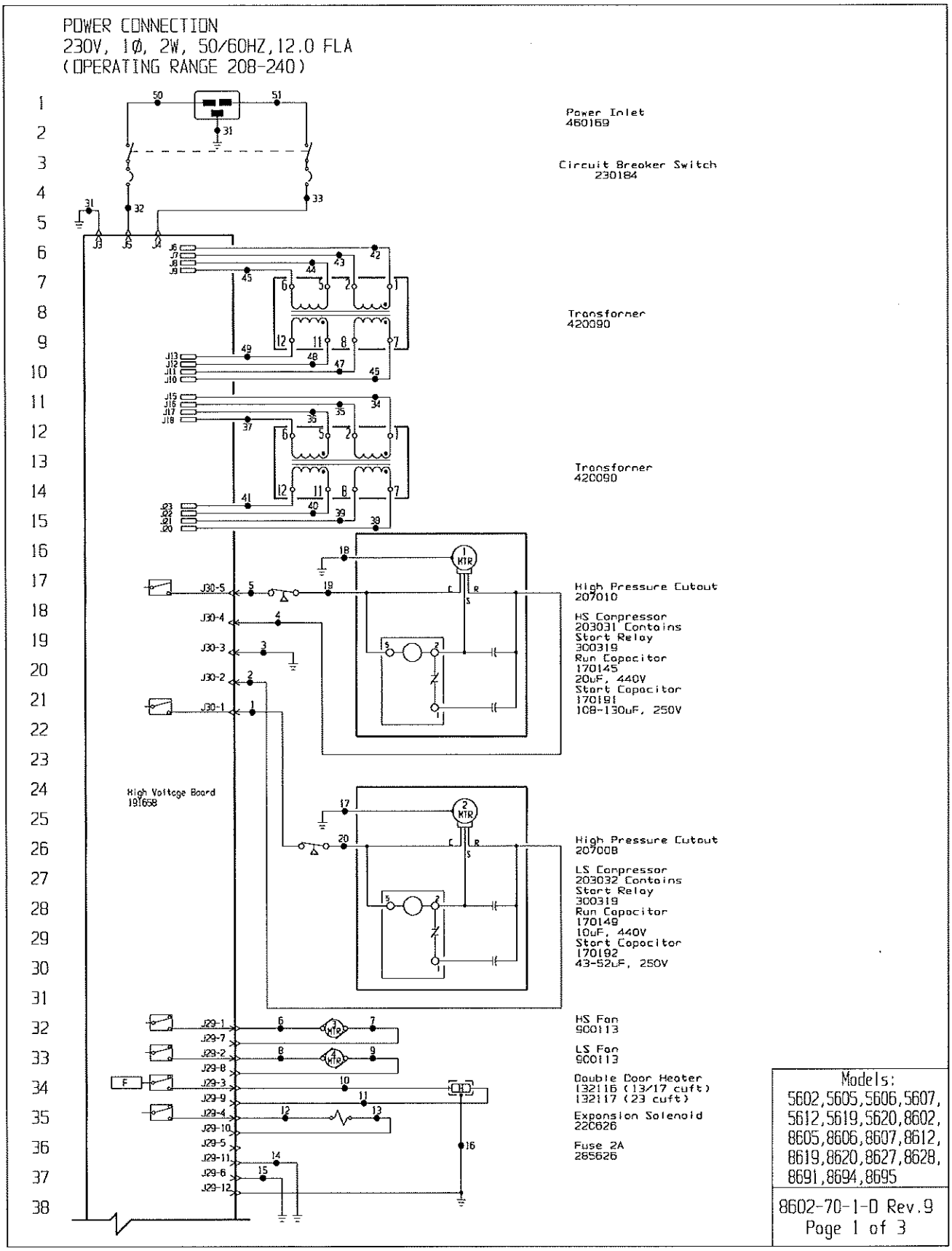
POWER CONNECTION
230V, 1Ø, 2W, 50/60HZ,12.0 FLA
(OPERATING RANGE 208-240)
Power Inlet
460169
Circuit Breaker Switch
230184
Transformer
420090
Transformer
420090
High Pressure Cutout
207010
HS Compressor
203031 Contains
Start Relay
300319
Run Capacitor
170145
20uF, 440V
Start Capacitor
170191
108-130uF, 250V
High Voltage Board
191658
High Pressure Cutout
207008
LS Compressor
203032 Contains
Start Relay
300319
Run Capacitor
170149
10uF, 440V
Start Capacitor
170192
43-52uF, 250V
HS Fan
900113
LS Fan
900113
Double Door Heater
132116 (13/17 cuft)
132117 (23 cuft)
Expansion Solenoid
220626
Fuse 2A
285626
Models:
5602,5605,5606,5607,
5612,5619,5620,8602,
8605,8606,8607,8612,
8619,8620,8627,8628,
8691,8694,8695
8602-70-1-D Rev.9
Page 1 of 3

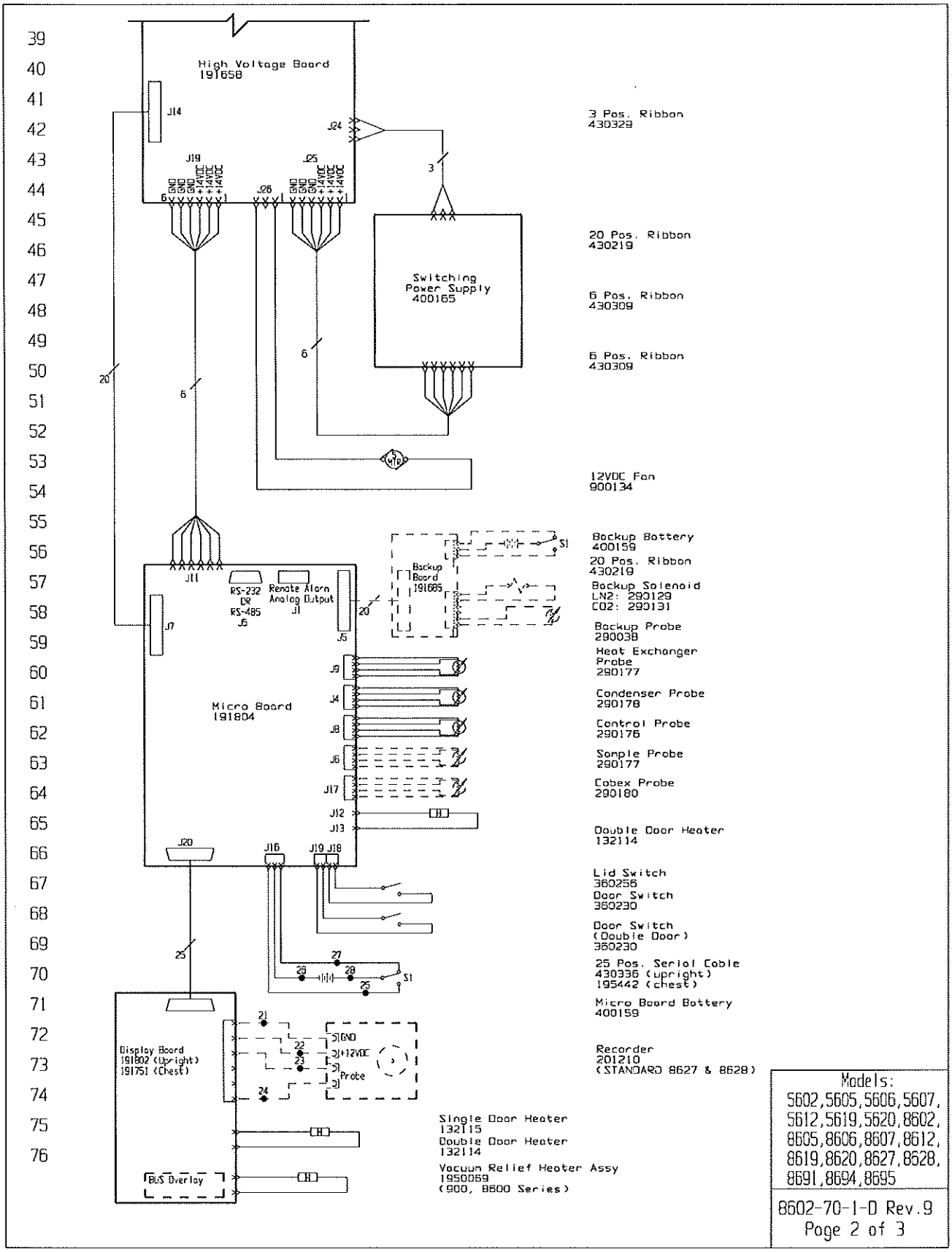
High Voltage Board
191658
J14
J24
J19
J25
J26
GND
+14VDC
3 Pos. Ribbon
430329
20 Pos. Ribbon
430219
Switching
Power Supply
400165
6 Pos. Ribbon
430309
6 Pos. Ribbon
430309
12VDC Fan
900134
Backup Battery
400159
20 Pos. Ribbon
430219
Backup Board
191685
Backup Solenoid
LN2: 290129
CO2: 290131
Backup Probe
290038
Heat Exchanger
Probe
290177
Condenser Probe
290178
Control Probe
290176
Sample Probe
290177
Cobex Probe
290180
Double Door Heater
132114
Lid Switch
360256
Door Switch
360230
Door Switch
(Double Door)
360230
25 Pos. Serial Cable
430336 (upright)
195442 (chest)
Micro Board Battery
400159
Recorder
201210
(STANDARD 8627 & 8628)
J11
RS-232
DB
RS-485
J6
Remote Alarm
Analog Output
J1
J5
J7
Micro Board
191804
J9
J4
J8
J6
J17
J12
J13
J20
J16
J19 J18
S1
Display Board
191802 (Upright)
191751 (Chest)
GND
+12VDC
Probe
Bus Overlay
Single Door Heater
132115
Double Door Heater
132114
Vacuum Relief Heater Assy
1950069
(900, 8600 Series)
Models:
5602,5605,5606,5607,
5612,5619,5620,8602,
8605,8606,8607,8612,
8619,8620,8627,8628,
8691,8694,8695
8602-70-1-D Rev.9
Page 2 of 3

WIRE #	COLOR	GAUGE	WIRE #	COLOR	GAUGE
1	BLK	14	25	WHT	18
2	RED	14	26	BLK	18
3	GRN/YEL	14	27	BLK	18
4	RED	14	28	RED	18
5	BLK	14	29		
6	BLK	18	30		
7	BLK	18	31	GRN/YEL	14
8	BLK	18	32	BLK	14
9	BLK	18	33	BLU	14
10	BLK	18	34	BLK	14
11	BLK	18	35	BLU	14
12	BLK	18	36	BLK	14
13	BLK	18	37	BLU	14
14	GRN/YEL	18	38	BLK	14
15	GRN/YEL	18	39	BLU	14
16	GRN/YEL	18	40	BLK	14
17	GRN/YEL	14	41	BLU	14
18	GRN/YEL	14	42	BLK	14
19	BLK	14	43	BLU	14
20	BLK	14	44	BLK	14
21	BLK	18	45	BLU	14
22	RED	18	46	BLK	14
23	BLK	18	47	BLU	14
24	RED	18	48	BLK	14
			49	BLU	14
			50	BLK	14
			51	BLU	14

Uprights

SIZE	THERMO	THERMO	VWR
13	8602	8691	5602
17	8605	8694	5605
23	8606	8695	5606
28	8607		5607
13	8627		

Chests

SIZE	THERMO	VWR
12.7	8612	5612
17	8619	5619
20	8620	5620
20	8628	

RS-232 SPECIFICATION

BAUD = 1200
PARITY = N
BITS = 8
STOP BITS = 2

RS-232 PORT
PIN# 2 TXD
PIN# 3 RXD
PIN# 5 GND

REMOTE CONTACTS/ANALOG OUTPUT
PIN# 1 Analog Output +
PIN# 2 Analog Output -
PIN# 3 Not Connected
PIN# 4 Not Connected
PIN# 5 Normally Closed
PIN# 6 Common.
PIN# 7 Normally Open

CONTACT RATING: 1A @ 30V
CONTACTS IN ALARM STATE

SW1 Settings for Analog Output

4-20mA Output

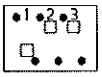

0-1V Output

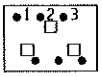

0-5V Output

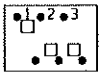

SW2 Settings for Communication Output

RS-485

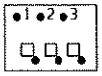

RS-232

1. Schematic represents single & double door upright models and chest models. All heaters are on uprights only. Expansion solenoid on 17, 23 & 28 uprights only.
2. Door switches shown in open position.
3. Battery switch shown in the OFF position.
4. Circuit breaker switch shown in OFF position.
5. Options and acessories shown in dashed lines.

REV	ECN NO.	DATE	BY	CAD	APPD	DESCRIPTION OF REVISION
9	FR-2004	07-01-08	KDG	KDG	CCS	ADDED COMMON TO 5607
8	FR-1654	06-13-05	HCE	GLS	LDN	REV. BATTERY CIRCUIT WIRING
7	FR-1799	06-13-05	RTB	KDG	LDN	ADD VACUUM RELIEF HEATER & OG DISPLAY BD
6	FR-1786	11-09-04	ADT	KDG	LDN	CHANGED DISPLAY BD. 191751 FROM 191715
5	FR-1785	08-14-04	ADT	KDG	LDN	CHANGED MICRO BOARD 191656 TO 191804

THIS DOCUMENT CONTAINS PROPRIETARY INFORMATION AND SUCH INFORMATION IS NOT TO BE DISCLOSED TO OTHERS FOR ANY PURPOSE NOR USED FOR MANUFACTURING PURPOSES WITHOUT WRITTEN PERMISSION FROM THERMO ELECTRON

MODEL/PART NAME: 8600 SERIES, 23CY, ULT FREEZERS
DWG TITLE: UNIT SCHEMATIC
DWN: ADT | CAD: ADT | APPD. MAH | DATE: 3-22-02 | SCALE: NONE
MATERIAL:
PAINT COLOR:
TOLERANCE UNLESS OTHERWISE SPECIFIED
ANGLES: DECIMAL: .XX=± .XXX=±
DRAWING NUMBER 8602-70-1 | SIZE D

Thermo ELECTRON CORPORATION Environmental Equipment Box 649, Marietta, OH 45750

ATTENTION
OBSERVE PRECAUTIONS
ELECTROSTATIC
SENSITIVE DEVICES

Models:
5602,5605,5606,5607,
5612,5619,5620,8602,
8605,8606,8607,8612,
8619,8620,8627,8628,
8691,8694,8695

8602-70-1-D Rev.9
Page 3 of 3

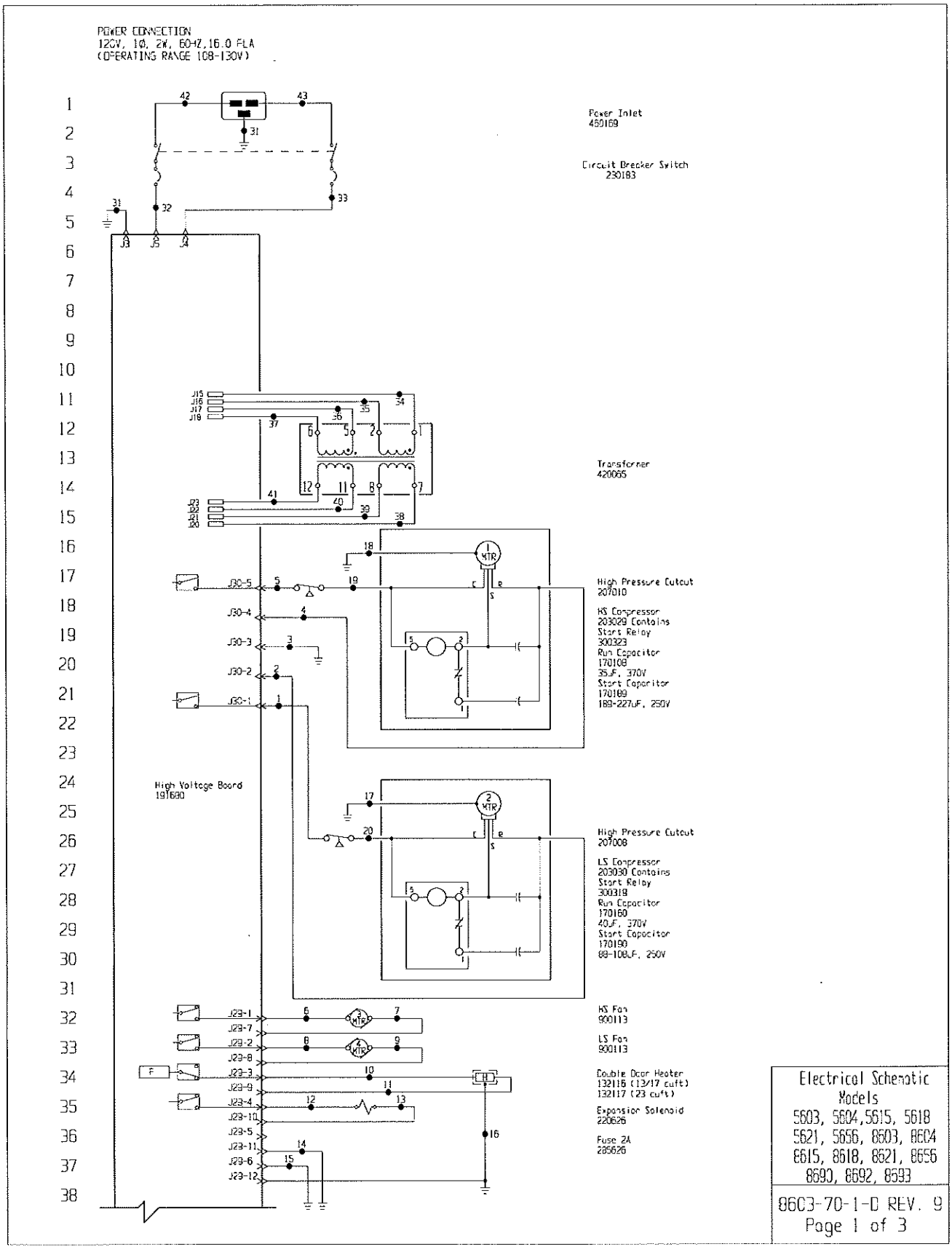
POWER CONNECTION
120V, 1Ø, 2W, 60HZ,16.0 FLA
(OPERATING RANGE 108-130V)
Power Inlet
450169
Circuit Breaker Switch
230183
Transformer
420065
High Pressure Cutout
207010
HS Compressor
203029 Contains
Start Relay
300323
Run Capacitor
170108
35µF, 370V
Start Capacitor
170189
189-227µF, 250V
High Voltage Board
191680
High Pressure Cutout
207008
LS Compressor
203030 Contains
Start Relay
300319
Run Capacitor
170160
40µF, 370V
Start Capacitor
170190
88-108µF, 250V
HS Fan
900113
LS Fan
900113
Double Door Heater
132116 (13/17 cuft)
132117 (23 cuft)
Expansion Solenoid
220626
Fuse 2A
285626
Electrical Schematic
Models
5603, 5604, 5615, 5618
5621, 5656, 8603, 8604
8615, 8618, 8621, 8656
8690, 8692, 8693
8603-70-1-D REV. 9
Page 1 of 3

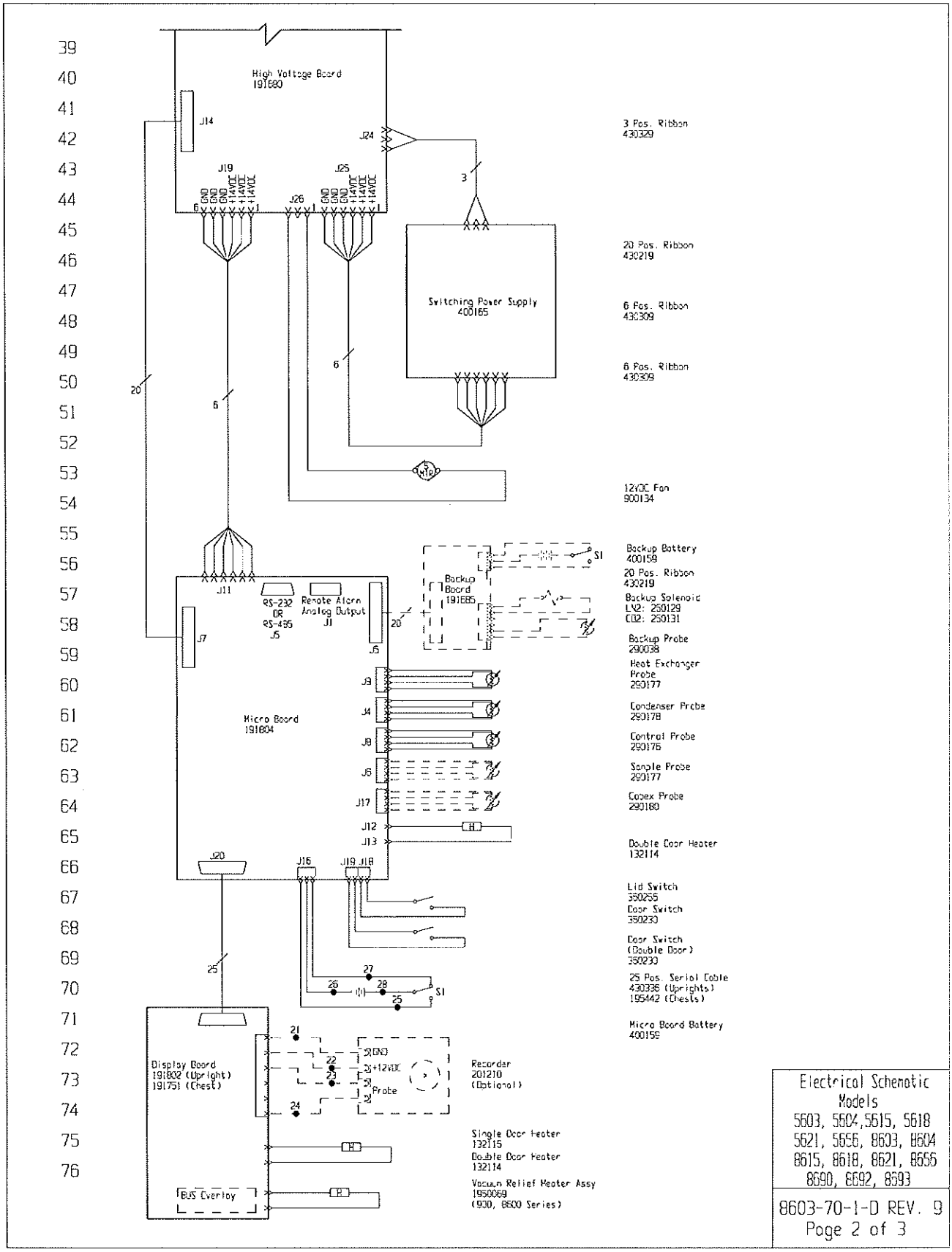
High Voltage Board
191680
J14
J24
J19
J25
J26
GND
+14VDC
3 Pos. Ribbon
430329
20 Pos. Ribbon
430219
Switching Power Supply
400165
6 Pos. Ribbon
430309
6 Pos. Ribbon
430309
12VDC Fan
900134
Backup Battery
400159
20 Pos. Ribbon
430219
Backup Solenoid
LN2: 250129
CO2: 250131
Backup Probe
290038
Heat Exchanger Probe
290177
Condenser Probe
290178
Control Probe
290176
Sample Probe
290177
Coex Probe
290180
Double Door Heater
132114
Lid Switch
350255
Door Switch
350230
Door Switch
(Double Door)
350230
25 Pos. Serial Cable
430336 (Uprights)
195442 (Chests)
Micro Board Battery
400159
Backup Board
191685
S1
J11
RS-232
OR
RS-485
J5
Remote Alarm
Analog Output
J1
J7
J3
J4
J8
J6
J17
J12
J13
J20
J16
J19 J18
Micro Board
191804
Display Board
191802 (Upright)
191751 (Chest)
GND
+12VDC
Probe
Recorder
201210
(Optional)
Single Door Heater
132115
Double Door Heater
132114
Vacuum Relief Heater Assy
1950069
(930, 8600 Series)
BUS Overlay
Electrical Schematic
Models
5603, 5604, 5615, 5618
5621, 5656, 8603, 8604
8615, 8618, 8621, 8656
8690, 8692, 8693
8603-70-1-D REV. 9
Page 2 of 3

WIRE #	COLOR	GAUGE	WIRE #	COLOR	GAUGE
1	BLK	14	25	WHT	18
2	RED	14	26	BLK	18
3	GRN/YEL	14	27	BLK	18
4	RED	14	28	RED	18
5	BLK	14	29		
6	BLK	18	30		
7	BLK	18	31	GRN/YEL	14
8	BLK	18	32	BLK	14
9	BLK	18	33	BLU	14
10	BLK	18	34	BLK	14
11	BLK	18	35	BLU	14
12	BLK	18	36	BLK	14
13	BLK	18	37	BLU	14
14	GRN/YEL	18	38	BLK	14
15	GRN/YEL	18	39	BLU	14
16	GRN/YEL	18	40	BLK	14
17	GRN/YEL	14	41	BLU	14
18	GRN/YEL	14	42	BLK	14
19	BLK	14	43	BLU	14
20	BLK	14			
21	BLK	18			
22	RED	18			
23	BLK	18			
24	RED	18			

Uprights

SIZE	THERMO	THERMO	VWR
13	8603	8692	5603
17	8604	8693	5604
23	8656	8690	5656

Chests

SIZE	THERMO	VWR
12.7	8615	5615
17	8618	5618
20	8621	5621

RS-232 SPECIFICATION

BAUD = 1200
PARITY = N
BITS = 8
STOP BITS = 2

REMOTE CONTACTS/ANALOG OUTPUT
PIN# 1 Analog Output +
PIN# 2 Analog Output -
PIN# 3 Not Connected
PIN# 4 Not Connected
PIN# 5 Normally Closed
PIN# 6 Common.
PIN# 7 Normally Open

CONTACT RATING 1A @ 30V
CONTACTS IN ALARM STATE

RS-232 PORT
PIN# 2 TXD
PIN# 3 RXD
PIN# 5 GND

SW1 Settings for Analog Output

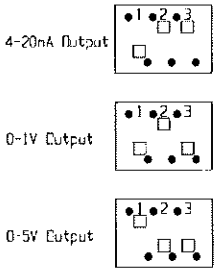

SW2 Settings for Communication Output

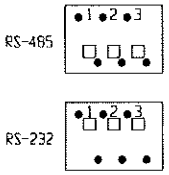

1. Schematic represents single & double door upright models and chest models. All heater are for uprights only. Expansion solenoid on 17 & 23 cuft uprights only.
2. Door switches shown in open position.
3. Battery switch shown in the OFF position.
4. Circuit breaker switch shown in OFF position
5. Opt ons and acessories shown in dashed lines

REV	ECN NO	DATE	BY	CAD	APPD	DESCRIPTION OF REVISION
9	FR-1911	07-27-06	S.A	NSE	CCS	CHG'D START CAPACITORS HIGHLOW COMPRESSORS
8	FR-1854	06-13-05	HCE	QLS	LDN	REV. BATTERY CIRCUIT WIRING
7	FR-1788	06-13-05	RTB	KDG	LDN	ADD VACUUM RELIEF HEATER & CHG DISPLAY BC
6	FR-1766	11-09-04	ADT	KDG	LDN	CHANGED DISPLAY BC. 191751 FROM 191715
5	FR-1785	08-14-04	ADT	KDG	LDN	CHANGED MICRO BOARD 191656 TO 191804

THIS DOCUMENT CONTAINS PROPRIETARY INFORMATION AND SUCH INFORMATION IS NOT TO BE DISCLOSED TO OTHERS FOR ANY PURPOSE NOR USED FOR MANUFACTURING PURPOSES WITHOUT WRITTEN PERMISSION FROM THERMO ELECTRON

MODEL/PART NAME: 8600 SERIES, 120V, ULT FREEZERS
DWG TITLE: UNIT SCHEMATIC
DWN: ADT | CAD: ADT | APPD: MAH | DATE: 3-22-02 | SCALE: NONE
MATERIAL:
PAINT COLOR:
TOLERANCE UNLESS OTHERWISE SPECIFIED
ANGLES: DECIMAL .XX±.0 .XXX±.0
DRAWING NUMBER 8603-70-1 | SIZE D

Thermo
ELECTRON CORPORATION
Contemporary Environment Equipment
Box 649, Marietta, OH 45750

ATTENTION
OBSERVE PRECAUTIONS
ELECTROSTATIC
SENSITIVE DEVICES

Electrical Schematic
Models
5603, 5604, 5615, 5618
5621, 5656, 8603, 8604
8615, 8618, 8621, 8656
8690, 8692, 8693

8603-70-1-D REV. 9
Page 3 of 3

VWR SCIENTIFIC PRODUCTS STANDARD AND SIGNATURE SERIES ULT FREEZER WARRANTY - USA

The Warranty Period starts two weeks from the date your equipment is shipped from our facility. This allows for shipping time so the warranty will go into effect at approximately the same time your equipment is delivered. The warranty protection extends to any subsequent owner during the warranty period.

During the first two years of the warranty period, component parts proven to be non-conforming in materials or workmanship will be repaired or replaced at VWR/Thermo Electron Corporation's expense, labor included. The Signature Series ULT Freezers include an additional three year warranty on the compressors, parts only, F.O.B. factory. Installation and calibration is not covered by this warranty agreement. The Technical Services Department must be contacted for warranty determination and direction prior to any work being performed. Expendable items, i.e., glass, filters, pilot lights, light bulbs and door gaskets are excluded from this warranty.

Replacement or repair of component parts or equipment under this warranty shall not extend the warranty to either the equipment or to the component part beyond the original two year warranty period. VWR and/or Thermo must give prior approval for the return of any components or equipment.

THIS WARRANTY IS EXCLUSIVE AND IN LIEU OF ALL OTHER WARRANTIES, WHETHER WRITTEN, ORAL, OR IMPLIED. NO WARRANTIES OF MERCHANTABILITY OR FITNESS FOR A PARTICULAR PURPOSE SHALL APPLY. Thermo shall not be liable for any indirect or consequential damages including, without limitation, damages relating to lost profits or loss of products.

Your local VWR Sales Office is ready to help with comprehensive site preparation information before your equipment arrives. Printed instruction manuals carefully detail equipment installation, operation, and preventive maintenance.

If equipment service is required, please call the Technical Services Office at 1-888-213-1790 (USA and Canada) or 1-740-373-4763. We're ready to answer your questions on equipment warranty, operation, maintenance, service, and special applications. Outside the USA, contact your local distributor for warranty information.

ISO 9001 REGISTERED

Rev. 4 5/8/03

VWR SCIENTIFIC PRODUCTS STANDARD AND SIGNATURE SERIES ULT FREEZER WARRANTY - INTERNATIONAL

The Warranty Period starts two months from the date your equipment is shipped from our facility. This allows for shipping time so the warranty will go into effect at approximately the same time your equipment is delivered. The warranty protection extends to any subsequent owner during the warranty period.

During the first two years of the warranty period, component parts proven to be non-conforming in materials or workmanship will be repaired or replaced at VWR/Thermo Electron Corporation's expense, labor excluded. The Signature Series ULT Freezers include an additional three year warranty on the compressors, parts only, F.O.B. factory. Installation and calibration is not covered by this warranty agreement. The Technical Services Department must be contacted for warranty determination and direction prior to any work being performed. Expendable items, i.e., glass, filters, pilot lights, light bulbs and door gaskets are excluded from this warranty.

Replacement or repair of component parts or equipment under this warranty shall not extend the warranty to either the equipment or to the component part beyond the original two year warranty period. VWR and/or Thermo must give prior approval for the return of any components or equipment.

THIS WARRANTY IS EXCLUSIVE AND IN LIEU OF ALL OTHER WARRANTIES, WHETHER WRITTEN, ORAL, OR IMPLIED. NO WARRANTIES OF MERCHANTABILITY OR FITNESS FOR A PARTICULAR PURPOSE SHALL APPLY. Thermo shall not be liable for any indirect or consequential damages including, without limitation, damages relating to lost profits or loss of products.

Your local VWR Sales Office is ready to help with comprehensive site preparation information before your equipment arrives. Printed instruction manuals carefully detail equipment installation, operation, and preventive maintenance.

If equipment service is required, please call your local distributor or the Technical Services Department at 1-740-373-4763 (1-888-213-1790 in USA or Canada). We're ready to answer your questions on equipment warranty, operation, maintenance, service, and special applications. Outside the USA, contact your local distributor for warranty information.

ISO 9001 REGISTERED

Rev. 5 5/8/03

Appendix A Handling Liquid Nitrogen

Warning Contact of liquid nitrogen or cold gas with the skin or eyes may cause serious freezing (frostbite) injury. ▲

Handle liquid nitrogen carefully.

The extremely low temperature can freeze human flesh very rapidly. When spilled on a surface the liquid tends to cover it completely and intimately, cooling a large area. The gas issuing from the liquid is also extremely cold. Delicate tissue, such as that of the eyes, can be damaged by an exposure to the cold gas which would be too brief to affect the skin of the hands or face.

Never allow any unprotected part of your body to touch objects cooled by liquid nitrogen.

Such objects may stick fast to the skin and tear the flesh when you attempt to free yourself. Use tongs to withdraw objects immersed in the liquid, and handle the object carefully.

Wear protective clothing.

Protect your eyes with a face shield or safety goggles (safety glasses without side shields do not give adequate protection). Always wear gloves when handling anything that is, or may have been, in immediate contact with liquid nitrogen. Insulated gloves are recommended, but heavy leather gloves may also be used. The gloves should fit loosely, so that they can be thrown off quickly if liquid should splash into them. When handling liquid in open containers, it is advisable to wear high-top shoes. Trousers (which should be cuffless if possible) should be worn outside the shoes.

Introduction

The safe handling and use of liquid nitrogen in cryogenic refrigerators and dewar flasks is largely a matter of knowing the potential hazards and using common-sense procedures based on that knowledge. There are two important properties of liquid nitrogen that present potential hazards:

1. It is extremely cold. At atmospheric pressure, liquid nitrogen boils at -320°F (-196°C).
2. Very small amounts of liquid vaporize into large amounts of gas. One liter of liquid nitrogen becomes 24.6cu. ft. (700l) of gas.

The safety precautions in this booklet must be followed to avoid potential injury or damage which could result from these two characteristics. Do not attempt to handle liquid nitrogen until you read and fully understand the potential hazards, their consequences, and the related safety precautions. Keep this booklet handy for ready reference and review.

Note Argon is an inert gas whose physical properties are very similar to those of nitrogen. The precautions and safe practices for the handling and use of liquid argon are the same as those for liquid nitrogen. ▲

Use only containers designed for low temperature liquids.

Cryogenic containers are specifically designed and made of materials that can withstand the rapid changes and extreme temperature differences encountered in working with liquid nitrogen. Even these special containers should be filled SLOWLY to minimize the internal stresses that occur when any material is cooled. Excessive internal stresses can damage the container.

Do not cover or plug the entrance opening of any liquid nitrogen refrigerator or dewar. Do not use any stopper or other device that would interfere with venting of gas.

These cryogenic liquid containers are generally designed to operate with little or no internal pressure. Inadequate venting can result in excessive gas pressure which could damage or burst the container. Use only the loose-fitting necktube core supplied or one of the approved accessories for closing the necktube. Check the unit periodically to be sure that venting is not restricted by accumulated ice or frost.

Use proper transfer equipment.

Use a phase separator or special filling funnel to prevent splashing and spilling when transferring liquid nitrogen into or from a dewar or refrigerator. The top of the funnel should be partly covered to reduce splashing. Use only small, easily-handled dewars for pouring liquid. For the larger, heavier containers, use a cryogenic liquid withdrawal device to transfer liquid from one container to another. Be sure to follow instructions supplied with the withdrawal device. When liquid cylinders or other large storage containers are used for filling, follow the instructions supplied with those units and their accessories.

Introduction (continued)

Do not overfill containers.

Filling above the bottom of the necktube (or specified maximum level) can result in overflow and spillage of liquid when the necktube core or cover is placed in the opening.

Never use hollow rods or tubes as dipsticks.

When a warm tube is inserted into liquid nitrogen, liquid will spout from the top of the tube due to gasification and rapid expansion of liquid inside the tube.

Warning Nitrogen gas can cause suffocation without warning! ▲

Store and use liquid nitrogen only in a well-ventilated place.

As the liquid evaporates, the resulting gas tends to displace the normal air from the area. In closed areas, excessive amounts of nitrogen gas reduce the concentration of oxygen and can result in asphyxiation. Because nitrogen gas is colorless, odorless and tasteless, it cannot be detected by the human senses and will be breathed as if it were air. Breathing an atmosphere that contains less than 18% oxygen can cause dizziness and quickly result in unconsciousness and death.

Note The cloudy vapor that appears when liquid nitrogen is exposed to the air is condensed moisture; not the gas itself. The issuing gas is invisible. ▲

Never dispose of liquid nitrogen in confined areas or places where others may enter.

Disposal of liquid nitrogen should be done outdoors in a safe place. Pour the liquid slowly on gravel or bare earth where it can evaporate without causing damage. Do not pour the liquid on pavement.

Handling Liquid Carbon Dioxide

Warning High concentrations of CO_2 gas can cause asphyxiation! OSHA Standards specify that employee exposure to carbon dioxide in any eight-hour shift of a 40-hour work week shall not exceed the eight-hour time weighted average of 5000 PPM (0.5% CO_2). The short term exposure limit for 15 minutes or less is 30,000 PPM (3% CO_2). Carbon dioxide monitors are recommended for confined areas where concentrations of carbon dioxide gas can accumulate. ▲

Store and use liquid CO_2 only in a well-ventilated place.

As the liquid evaporates, the resulting gas tends to displace the normal air from the area. In closed areas, excessive amounts of CO_2 gas reduce the concentration of oxygen and can result in asphyxiation. Because CO2 gas is colorless, odorless and tasteless, it cannot be detected by the human senses and will be breathed as if it were air. Breathing an atmosphere that contains less than 18% oxygen can cause dizziness and quickly result in unconsciousness and death.

Note The cloudy vapor that appears when liquid CO_2 is exposed to the air is condensed moisture, not the gas itself. The issuing gas is invisible. ▲

Never dispose of liquid CO_2 in confined areas or places where others may enter.

Disposal of liquid CO_2 should be done outdoors in a safe place. Pour the liquid slowly on gravel or bare earth where it can evaporate without causing damage. Do not pour the liquid on pavement.

First Aid

If a person seems to become dizzy or loses consciousness while working with liquid nitrogen or carbon dioxide, move to a well-ventilated area immediately. If breathing has stopped, apply artificial respiration. If breathing is difficult, give oxygen. Call a physician. Keep warm and at rest.

If exposed to liquid or cold gas, restore tissue to normal body temperature (98.6° F) as rapidly as possible, followed by protection of the injured tissue from further damage and infection. Remove or loosen clothing that may constrict blood circulation to the frozen area. Call a physician. Rapid warming of the affected part is best achieved by using water at 108° F. Under no circumstance should the water be over 112° F, nor should the frozen part be rubbed either before or after rewarming. The patient should neither smoke nor drink alcohol.

Declaration of Conformity

Manufacturer's Name: Thermo Fisher Scientific (Asheville) LLC

Manufacturer's Address: 401 Millcreek Road
Marietta, Ohio 45750
U.S.A.

Product Description: VWR Scientific Products
Laboratory Freezer

Product Designations: 5602

Year of Initial CE Marking: 2002

Affected Serial Numbers: Release 4
(Release Level [REL#] shown on Serial Tag)

This product conforms to the following European Union Directive(s):

EMC: 89/336/EEC
LVD: 73/23/EEC

This product conforms to the following Harmonized, International and National Standards:

EMC:	LVD:
EN 61326-1:1997	EN 61010-1
EN 50081-1:92	Amendments 1 and 2
EN 50082-1:97	EN 60335-2-24 (applicable sections)
	CSA C22.2 No. 1010.1
	UL 471 (applicable sections)
	UL 61010A-1

Richard L. Miller, CQE
Regulatory Compliance Manager

ThermoFisher SCIENTIFIC

25 June 2007

Rev. 4

Declaration of Conformity

Manufacturer's Name: Thermo Fisher Scientific (Asheville) LLC

Manufacturer's Address: 401 Millcreek Road
Marietta, Ohio 45750
U.S.A.

Product Description: VWR Scientific Products
Laboratory Freezer

Product Designations: 5603

Year of Initial CE Marking: 2002

Affected Serial Numbers: Release 4
(Release level [REL#] shown on Serial Tag)

This product conforms to the following European Union Directive(s):

EMC: 89/336/EEC
LVD: 73/23/EEC

This product conforms to the following Harmonized, International and National Standards:

EMC:	LVD:
EN 61326-1:1997	EN 61010-1
EN 50081-1:92	Amendments 1 and 2
EN 50082-1:97	EN 60335-2-24 (applicable sections)
	CSA C22.2 No. 1010.1
	UL 471 (applicable sections)
	UL 61010A-1

Richard L. Miller, CQE
Regulatory Compliance Manager

ThermoFisher SCIENTIFIC

25 June 2007

Rev. 4

Declaration of Conformity

Manufacturer's Name: Thermo Fisher Scientific (Asheville) LLC

Manufacturer's Address: 401 Millcreek Road
Marietta, Ohio 45750
U.S.A.

Product Description: VWR Scientific Products
Laboratory Freezer

Product Designations: 5604

Year of Initial CE Marking: 2002

Affected Serial Numbers: Release 4
(Release Level [REL#] shown on Serial Tag)

This product conforms to the following European Union Directive(s):

EMC: 89/336/EEC
LVD: 73/23/EEC

This product conforms to the following Harmonized, International and National Standards:

EMC:	LVD:
EN 61326-1:1997	EN 61010-1
EN 50081-1:92	Amendments 1 and 2
EN 50082-1:97	EN 60335-2-24 (applicable sections)
	CSA C22.2 No. 1010.1
	UL 471 (applicable sections)
	UL 61010A-1

Richard L. Miller, CQE
Regulatory Compliance Manager

ThermoFisher SCIENTIFIC

25 June 2007

Rev. 4

Declaration of Conformity

Manufacturer's Name: Thermo Fisher Scientific (Asheville) LLC

Manufacturer's Address: 401 Millcreek Road
Marietta, Ohio 45750
U.S.A.

Product Description: VWR Scientific Products
Laboratory Freezer

Product Designations: 5605

Year of Initial CE Marking: 2002

Affected Serial Numbers: Release 4
(Release Level [REL#] shown on Serial Tag)

This product conforms to the following European Union Directive(s):

EMC: 89/336/EEC
LVD: 73/23/EEC

This product conforms to the following Harmonized, International and National Standards:

EMC:	LVD:
EN 61326-1:1997	EN 61010-1
EN 50081-1:92	Amendments 1 and 2
EN 50082-1:97	EN 60335-2-24 (applicable sections)
	CSA C22.2 No. 1010.1
	UL 471 (applicable sections)
	UL 61010A-1

Richard L. Miller, CQE
Regulatory Compliance Manager

ThermoFisher SCIENTIFIC

25 June 2007

Rev. 4

Declaration of Conformity

Manufacturer's Name: Thermo Fisher Scientific (Asheville) LLC

Manufacturer's Address: 401 Millcreek Road
Marietta, Ohio 45750
U.S.A.

Product Description: VWR Scientific Products
Laboratory Freezer

Product Designations: 5605

Year of Initial CE Marking: 2002

Affected Serial Numbers: Release 4
(Release Level [REL#] shown on Serial Tag)

This product conforms to the following European Union Directive(s):

EMC: 89/336/EEC
LVD: 73/23/EEC

This product conforms to the following Harmonized, International and National Standards:

EMC:	LVD:
EN 61326-1:1997	EN 61010-1
EN 50081-1:92	Amendments 1 and 2
EN 50082-1:97	EN 60335-2-24 (applicable sections)
	CSA C22.2 No. 1010.1
	UL 471 (applicable sections)
	UL 61010A-1

Richard L. Miller, CQE
Regulatory Compliance Manager

ThermoFisher SCIENTIFIC

14 June 2007

Rev 4

Declaration of Conformity

Manufacturer's Name: Thermo Fisher Scientific (Asheville) LLC

Manufacturer's Address: 401 Millcreek Road
Marietta, Ohio 45750
U.S.A.

Product Description: VWR Scientific Products
Laboratory Freezer

Product Designations: 5656

Year of Initial CE Marking: 2004

Affected Serial Numbers: Release 4
(Release Level [REL#] shown on Serial Tag)

This product conforms to the following European Union Directive(s):

EMC: 89/336/EEC
LVD: 73/23/EEC

This product conforms to the following Harmonized, International and National Standards:

EMC:	LVD:
EN 61326-1:1997	EN 61010-1
EN 50081-1:92	Amendments 1 and 2
EN 50082-1:97	CSA C22.2 No. 1010.1
	UL 471 (applicable sections)
	UL 61010-1

Richard L. Miller, CQE
Regulatory Compliance Manager

ThermoFisher SCIENTIFIC

14 June 2007

Rev 2

Declaration of Conformity

Manufacturer's Name: Thermo Fisher Scientific (Asheville) LLC

Manufacturer's Address: 401 Millcreek Road
Marietta, Ohio 45750
U.S.A.

Product Description: VWR Scientific Products
Laboratory Freezer

Product Designations: 5607

Year of Initial CE Marking: 2008

Affected Serial Numbers: Release 4
(Release Level [REL#] shown on Serial Tag)

This product conforms to the following European Union Directive(s):

EMC: 89/336/EEC
LVD: 73/23/EEC

This product conforms to the following Harmonized, International and National Standards

EMC:	LVD:
EN 61326-1:1997	EN 61010-1
EN 50081-1:92	Amendments 1 and 2
EN 50082-1:97	EN 60335-2-24 (applicable sections)
	CSA C22.2 No. 1010.1
	UL 471 (applicable sections)
	UL 61010A-1

Richard L. Miller, CQE
Regulatory Compliance Manager

ThermoFisher SCIENTIFIC

30 June 2008

Rev 0