DESIGN CRITERIA DOCUMENT

WBS 1.4.5

Linac Physics, Diagnostics, and Commissioning

(Including MEBT Chopper)

Date: April 30, 2001

A U.S. Department of Energy Multilaboratory Project
SPALLATION NEUTRON SOURCE
Argonne National Laboratory • Brookhaven National Laboratory • Thomas Jefferson National Accelerator Facility • Lawrence Berkeley National Laboratory • Los Alamos National Laboratory • Oak Ridge National Laboratory
SNS

DESIGN CRITERIA DOCUMENT

WBS 1.4.5

Linac Physics, Diagnostics, and Commissioning

(Including MEBT Chopper)

Author: **Robert Hardekopf**

Contributors: **Jim Stovall**
Jim Billen
Ken Crandall
Sergey Kurennoy
Subrata Nath
John Power
Mike Plum
Robert Shafer
Haronori Takeda
Lloyd Young

Date Published: April 30, 2001

DESIGN CRITERIA DOCUMENT

WBS 1.4.5

Linac Physics, Diagnostics, and Commissioning

(Including MEBT Chopper)

April 30, 2001

WBS 1.4.5.1 Workpackage Manager (MEBT Chopper)	John Power	26 APRIL 01 Date
WBS 1.4.5.2 Workpackage Manager (Linac Diagnostics)	Mike Plum	26 April 01 Date
WBS 1.4.5.3 Workpackage Manager (Linac Physcis)	James Stovall	26 April 01 Date
WBS 1.4.5.4 Workpackage Manager (Linac Commissioning)	James Stovall	26 April 01 Date
SNS-2 Group Leader (Linac RF Systems)	Mike Lynch	May 10-01 Date
SNS-3 Group Leader (Linac Mechancial Systems)	Kirk Christensen	5/10/01 Date
SNS-4 Group Leader (Linac Controls)	Mike Thiot	10 May '01 Date
Linac Systems Project Leader	Will Fox	5/11/01 Date
SNS Division Director (Linac Systems Senior Team Leader)	Don Rej	5/11/01 Date

1.0 SCOPE **5**

2.0 FUNCTIONS AND SYSTEM DESCRIPTION **7**

2.1 MEBT Chopper (WBS 1.4.5.1) 7

2.2 Linac Diagnostics (WBS 1.4.5.2) 10

2.3 Linac Physics (WBS 1.4.5.3) 11

2.4 Linac Commissioning (WBS 1.4.5.4) 20

3.0 DESIGN REQUIREMENTS **21**

3.1 General Requirements 21

3.2 MEBT Chopper Requirements (WBS 1.4.5.1) 23

3.3 Linac Diagnostics Requirements (WBS 1.4.5.2) 24

3.4 Linac Physics Requirements (WBS 1.4.5.3) 29

3.5 Linac Commissioning Requirements (WBS 1.4.5.4) 31

4.0 SYSTEM INTERFACES **33**

4.1 Interfaces within Linac Systems (WBS 1.4) 33

4.1.1 Interfaces with RF Power (WBS 1.4.1) 33

4.1.2 Interfaces with DTL (WBS 1.4.2) 33

4.1.3 Interfaces with Coupled-Cavity Linac (WBS 1.4.4) 36

4.1.4 Interfaces with Superconducting-RF Linac (WBS 1.4.9 to 1.4.11) 39

4.2 Interfaces with Front-End Systems (WBS 1.3) 40

4.2.1 MEBT Chopper (WBS 1.4.5.1) Interfaces to WBS 1.3 40

4.2.2 Diagnostics (WBS 1.4.5.2) Interfaces to WBS 1.3 43

4.2.3 Physics (WBS 1.4.5.3) Interfaces to WBS 1.3 43

4.2.4 Commissioning (WBS 1.4.5.4) Interfaces to WBS 1.3 43

4.3 Interfaces with Ring Systems (WBS 1.5) 44

4.3.1 Chopper (WBS 1.4.5.1) Interfaces to WBS 1.5 44

4.3.2 Diagnostics (WBS 1.4.5.2) Interfaces to WBS 1.5 44

4.3.3 Physics (WBS 1.4.5.3) Interfaces to WBS 1.5 44

4.3.4 Commissioning (WBS 1.4.5.4) Interfaces to WBS 1.5 44

4.4 Interfaces with Conventional Facilities (WBS 1.8) 45

4.5 Interfaces with Control System (WBS 1.9) 45

4.5.1 Chopper (WBS 1.4.5.1) Interfaces to WBS 1.9 45

4.5.2 Diagnostics (WBS 1.4.5.2) Interfaces to WBS 1.9 45

4.5.3 Physics (WBS 1.4.5.3) Interfaces to WBS 1.9 46
4.3.4 Commissioning (WBS 1.4.5.4) Interfaces to WBS 1.9 46

5.0 QUALITY ASSURANCE 47

5.1 General 47

5. 2 Tests 47
5.2.1 Engineering Tests 47
5.2.1 Reliability Testing 47

5.3 Quality Conformance Inspections 47
5.3.1 Certifications 47

6.0 SAFETY REQUIREMENTS 48

7.0 DOCUMENTATION 48

7.1 Specifications 48

7.2 Engineering Drawings and Associated Lists 48

7.3 Technical Manuals and Procedures 48
7.3.1 Procedures 48
7.3.2 Manuals 49
7.3.3 Documentation Numbering 49
7.3.4 Test Plans and Procedures 49

8.0 OPERATIONS AND MAINTENANCE REQUIREMENTS 50

8.1 Operating Modes 50

8.2 Surveillance and in-service inspection requirements 50

8.3 General Maintenance 50

8.4 Abnormal Events and Recovery Procedures 50

9.0 INSTALLATION REQUIREMENTS 51

10.0 ACCEPTANCE TESTING REQUIREMENTS 52

11.0 COMMISSIONING REQUIREMENTS 52

12.0 CODES AND STANDARDS 52

12.1 SNS Documents 52

12.2 Non-SNS Documents 52

13.0 ATTACHMENTS 53

Appendix A — Specifications for MEBT chopper pulser 53

Appendix B — Specifications for MEBT chopper loads and cables 53

Appendix C — Diagnostics Locations in Linac 53

Appendix D — RF-Power Requirements 53

Appendix E — Cell-Geometry Tables for DTL (SUPERFISH) 53

Appendix F — Cell-Geometry Tables for CCL (SUPERFISH) 53

Appendix G — Cell Parameters (PARMILA) 53

DESIGN CRITERIA DOCUMENT
WBS 1.4.5

Linac Physics, Diagnostics, and Commissioning (Including MEBT Chopper)

For the
SPALLATION NEUTRON SOURCE

1.0 SCOPE

This document establishes the performance, design, development, and test requirements for WBS 1.4.5, Physics, Diagnostics and Commissioning. This WBS element includes

WBS 1.4.5.1 MEBT Chopper System
WBS 1.4.5.2 Linac Diagnostics
WBS 1.4.5.3 Physics
WBS 1.4.5.4 Linac Commissioning

The Linac System, which follows the Front-End System s MEBT (medium-energy beam transport), accelerates the H^- beam from an energy of 2.5˚MeV to ~1000 MeV. Several types of RF structures perform this task, a drift-tube linac (DTL), a coupled-cavity linac (CCL) and a superconducting-RF (SRF) linac. Following the linac is the Ring System s HEBT (high-energy beam transport). Figure 1-1 shows a general schematic of the SNS Front End and Linac System layout. The MEBT is the region between the RFQ and DTL.

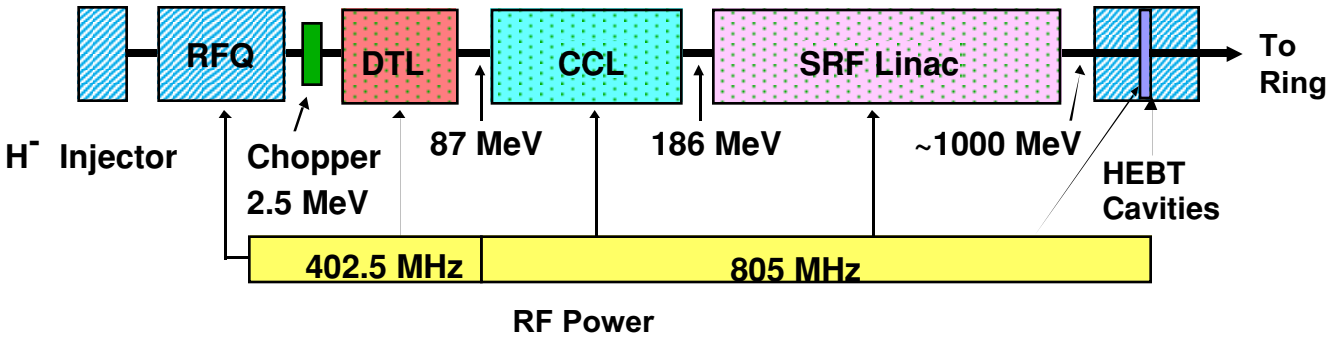

Figure 1-1. Layout of the SNS linac. The RFQ, DTL, and CCL are warm structures, and the SRF linac is superconducting. The energies are at the end of each structure.

WBS 1.4.5.1, MEBT Chopper System, deflects the beam between the RFQ and DTL with faster rise and fall times than the LEBT pre-chopper. The system includes identical structures for both a

chopper and anti-chopper. Both units and the power supplies that drive them are deliverables to LBNL for integration into the Front-End Systems.

WBS 1.4.5.2, Diagnostics, interprets the physics requirements for detecting both normal and off-normal operation of the beam and builds instruments to accomplish these requirements.

WBS 1.4.5.3, Physics, is responsible for physics aspects of the linac design, including choice of accelerating structures, structure physics parameters, beam-dynamics calculations, emittance preservation, tuning, and specification of operations and diagnostics.

WBS 1.4.5.4, Linac Commissioning, is charged with planning, preparation, and execution of the steps necessary to commission the linac and train operations personnel in tuning procedures.

2.0 FUNCTIONS AND SYSTEM DESCRIPTION

This section provides an overview of the functions of WBS 1.4.5. More detail can be found in references are at the end of each subsection.

2.1 MEBT Chopper (WBS 1.4.5.1)

The MEBT chopper is a fast deflection structure located between the RFQ and DTL. The MEBT chopper clears a gap in the beam current that has been partially introduced by a LEBT chopper in the injector, but with faster rise and fall times. The figure below shows the relationship of this chopper gap (middle) to the beam macropulse (top) and micropulse (bottom)

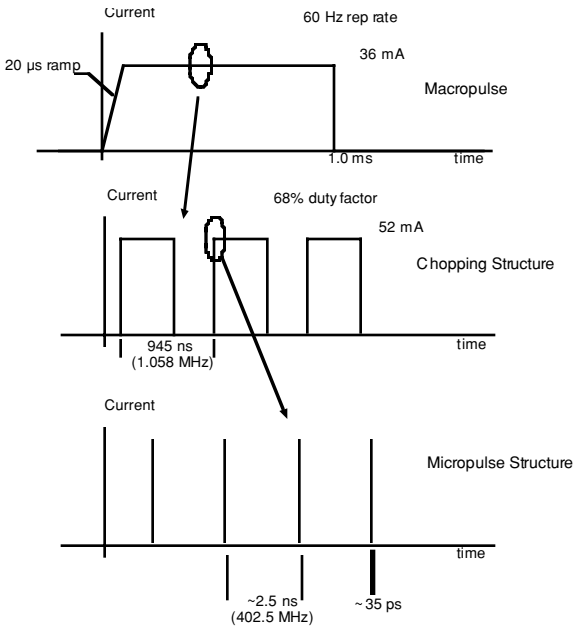

Figure 2-1. Timing structure of the SNS beam showing the function of the MEBT chopper.

An anti-chopper returns partially chopped beam in the MEBT to the axis to preserve emittance during the rise and fall times of the deflection structures. Because SNS will operate at higher peak intensities than any existing spallation source, forming the chopper gap and keeping it clear of particles at a level less than 10^{-4} of the peak beam is critical for reducing radiation levels in the ring and subsequent activation of ring components. The following diagram shows the MEBT layout with the locations of the chopper, the target that collects deflected beam, and the antichopper [1,2].

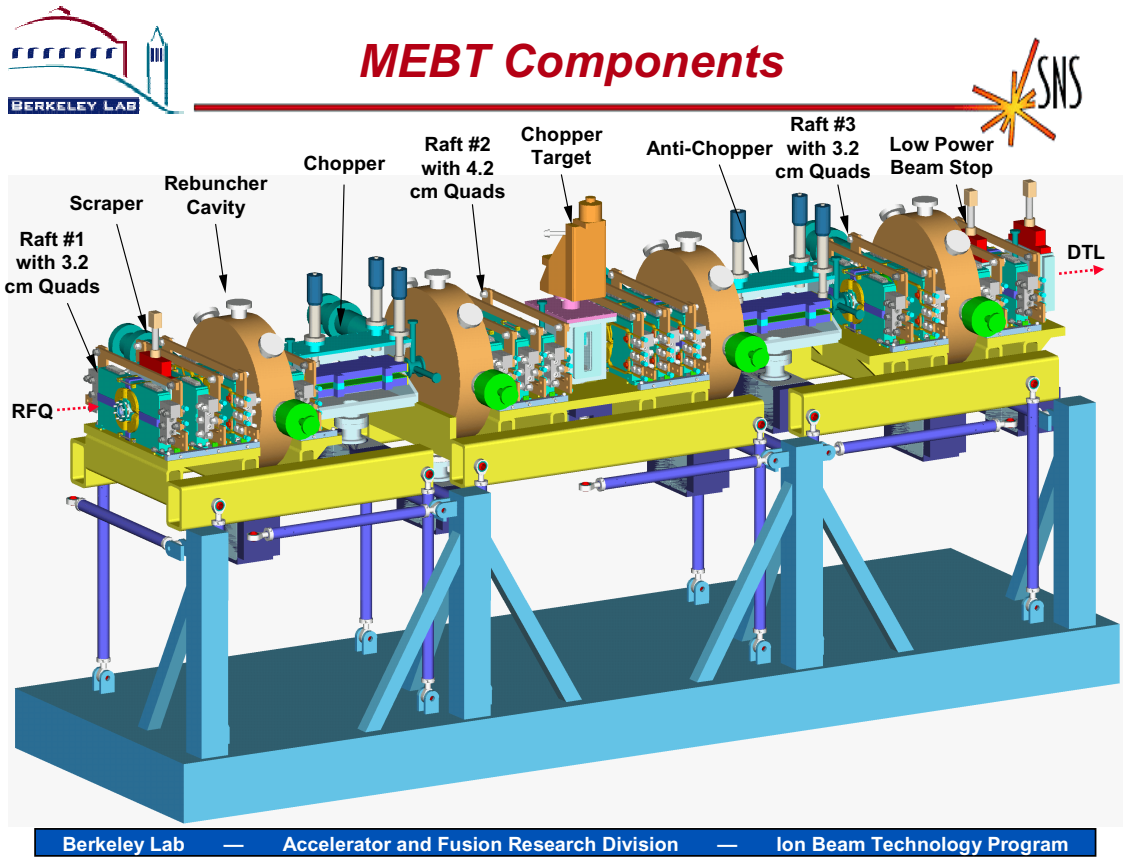

Figure 2-2. Layout of the MEBT showing locations of chopper and anti-chopper.

We have chosen a traveling-wave chopper structure based on the experience at LANSCE, but because the MEBT beam is at a higher energy (2.5 MeV compared with 0.75 MeV), the device must operate at a higher voltage. For SNS, a meander line is used to match the wave velocity along the beam axis to the beam velocity in the MEBT. This structure is shown below.

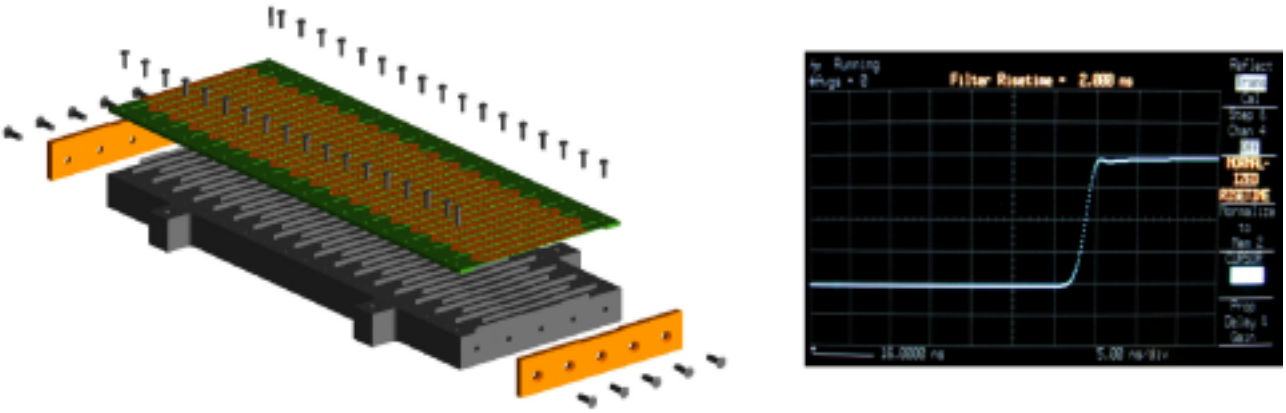

Figure 2-3. General construction of MEBT chopper on the left with scope trace on the right showing ~2 ns risetime demonstrated on a proof-of-principle structure.

The meander-line structure is currently being developed under the linac R&D program. Performance of a prototype has matched the 3D MAFIA calculations [3-5], demonstrating a risetime of 2 ns. Figure 2-4 shows details of the meander-line in the proof-of-principle structure.

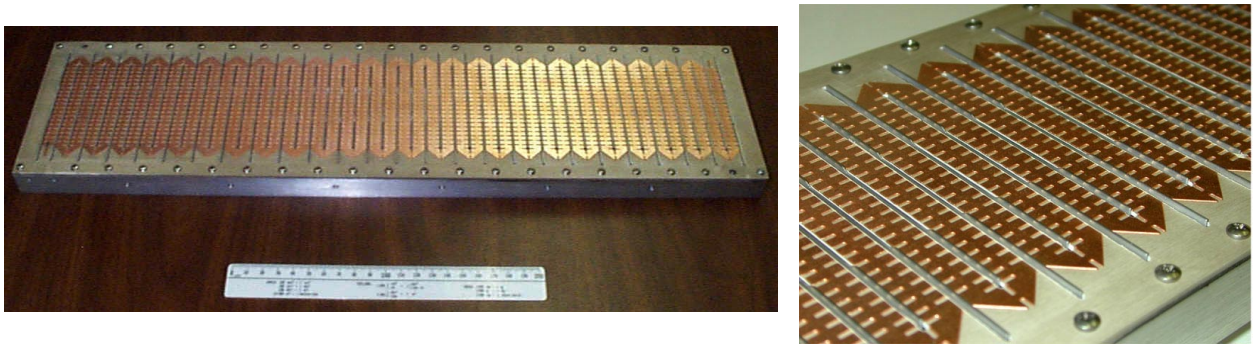

Figure 2-4. Meander-line structure for the fast MEBT chopper. The proof-of-principle structure is on the left, and a closer view of the etched copper striplines is on the right.

The actual risetime of the chopper wave will be limited by the FET pulsers, currently under development at DEI, Inc. in Boulder, CO. The specification for two pulsers to drive the top and bottom meander lines is – 2500 V with 10-ns (2 to 98%) risetime. Since with this risetime, partially deflected micropulses of the 402.5-MHz beam will be transmitted, the anti-chopper is required in the MEBT to return these micropulses to the beam axis before entering the DTL.

Section 2.1 References

[1] R. Keller, *State of the SNS Front-End Systems,* European Particle Accelerator Conference, Vienna, Austria, June 2000, 1657.

[2] J. Staples, D. Oshatz, T. Saleh, *Design of the SNS MEBT,* XX International Linac Conference, Monterey, CA, August 2000, 250.

[3] S Kurennoy, J. Power, D. Schrage, *Meander-Line Current Structure for SNS Fast Beam Chopper,* PAC99, New York, NY, March 1999, 1399.

[4] S. Kurennoy, J. Power, *Development of Meander-Line Current Structure for SNS Fast 2.5-MeV Beam Chopper,* European Particle Accelerator Conference, Vienna, Austria, June 2000, 336.

[5] S. Kurennoy, J. Power, *Meander-Line Current Structure Development for SNS Fast Chopper,* XX International Linac Conference, Monterey, CA, August 2000, 932.

2.2 Linac Diagnostics (WBS 1.4.5.2)

Diagnostics are an important part of a high-intensity linac. Accurate steering and matching of the beam are required to limit beam loss on apertures that would lead to activation and prevent hands-on maintenance [1,2]. A description of the diagnostic suite for the SNS linac has been published [3]. The following is a list of the types of diagnostics under design.

- Beam position and phase monitor (BPM)
- Profile monitors — wire scanner(WS), harp (HP), and viewing screen(VS)
- Current monitor toroid (BCM)
- Loss monitor — ionization chamber (BLM)
- Beam-in-gap detector — laser ionization (BIG)
- Phase width detector — Fourier

Calculations for the beam position and phase monitor have been described in several references [4,5]. The beam-in-gap detector uses a Q-switched laser to strip the H^- beam in the 90-degree bend between the linac and the accumulator ring. Stripped beam is detected at a downstream detector. The timing of the laser is synchronized with the chopping frequency so that one can detect the ratio of beam intensity in the pulse to that between pulses. The goal is to measure this ratio to an accuracy of 10^{-4}. A description of this system has also been published [6]. Other diagnostic systems are under development and will be described in the requirements section.

Section 2.2 References

[1] R. Hardekopf, *Beam Loss and Activation at LANSCE and SNS,* ICFA Conference on High-Intensity, High-Brightness Beams, Lake Geneva, WI, September 1999, 62.

[2] J. Alonso, *Beam Loss Working Group Report,* ICFA Conference on High-Intensity, High-Brightness Beams, Lake Geneva, WI, September 1999, 51.

[3] R. Hardekopf, S. Kurennoy, J. Power, R. Shafer, J. Stovall, *Beam Diagnostic Suite for the SNS Linac,* Proceedings of the Ninth Beam Instrumentation Workshop, Cambridge, MA, May 2000, 410.

[4] S. Kurennoy, *Electromagnetic Modeling of Beam Position and Phase Monitors for SNS Linac,* Proceedings of the Ninth Beam Instrumentation Workshop, Cambridge, MA, May 2000, 283.

[5] S. Kurennoy, *Beam Position-Phase Monitors for SNS Linac,* XX International Linac Conference, Monterey, CA, August 2000, 172.

[6] R. Shafer, *Laser Diagnostic for High-Current H^- Beams,* Proceedings of the 1998 International Linac Conference, Chicago, IL, August 1998, 535.

2.3 Linac Physics (WBS 1.4.5.3)

Physics develops the basic architecture of the linac by using experience and code simulations to predict performance. We present below a brief history of the linac design because it helps to elucidate some of the design choices. References are at the end of this section. The current requirements and parameters are in Section 3.0.

2.3.1 CDR Design

The SNS project had its Conceptual Design Review (CDR) in June 1997 and received construction funding from the US Department of Energy in October 1998 (beginning of FY99) The original design of the 1-GeV linear accelerator (linac) was a room-temperature device that could deliver average beam currents from 1 to 4 mA to the accumulator ring that follows. This baseline design would have provided 1 MW of beam power, but the accelerator system was upgradeable to 2 and 4 MW. This design and the upgrade requirements were described in several early papers [1-4]. The baseline requirements at CDR, many of which are still applicable, are shown in the table below.

Table 2.1. Linac requirements at CDR

Input H^- energy	2.5 MeV
Output H^- Energy	1001 MeV
Average beam current	1.04 mA
Average beam power	1.04 MW
Macropulse repetition rate	60 Hz
Macropulse length	0.974 ms
Beam duty factor	5.84 %
Chopper transmission	65%
Chopper period	841 ns
Peak macropulse current	27.7 mA
Avg. macropulse current	18.0 mA
Beam losses	<1 nA/m at 1 GeV

From these requirements, the following design parameters were established for the 1-MW room-temperature linac design.

Table 2.2. CDR room-temperature linac design parameters	
RF duty factor	7.02%
Average accelerating gradient E_0T	2.7 MV/m
Avg. Energy gain / real estate meter	2.02 MeV/m
Peak structure power losses	80.7 MW
Peak installed RF power	142.5 MW
Average RF power to linac	6.74 MW
Specified ac wall power for RF	22 MW
No. of 1.25-MW 402.5-MHz klystrons	2
No. of 2.5-MW 805-MHz klystrons	56
Physical length of linac	495 m
Linac vacuum	$<1 \times 10^{-7}$ torr
Linac tunnel, width × height	14 × 10 ft

2.3.2 Evolution of CDR Design

The evolution of the room-temperature-linac design from 1997 to 1999 is described in [5] with engineering overviews in [6-8]. For this room-temperature design, a 2-MW upgrade could be achieved with only the addition of RF power. The 4-MW upgrade required adding a second ion source and 402.5-MHz front-end system up to 20 MeV, with funneling of the two beams into an 805-MHz coupled-cavity drift-tube linac (CCDTL) structure.

Following an intensive project review late in 1999, the baseline design was changed to a 2-MW linac without provision for upgrading to 4 MW. This allowed the elimination of one of the RF structures, the CCDTL, since a 4-MW upgrade requiring funneling at 20-MeV was no longer a requirement. We therefore extended the 402.5-MHz DTL up to about 87 MeV. At this energy, the beam could be injected directly into the CCL structure. This change was formally adopted in November 1999.

2.1.3 Change to Superconducting Linac

The following March, after several studies of superconducting technology applied to the SNS linac, the baseline was changed to a superconducting RF (SRF) linac beginning at 186 MeV [9,10]. Subsequent optimization of this design has led to the configuration that follows.

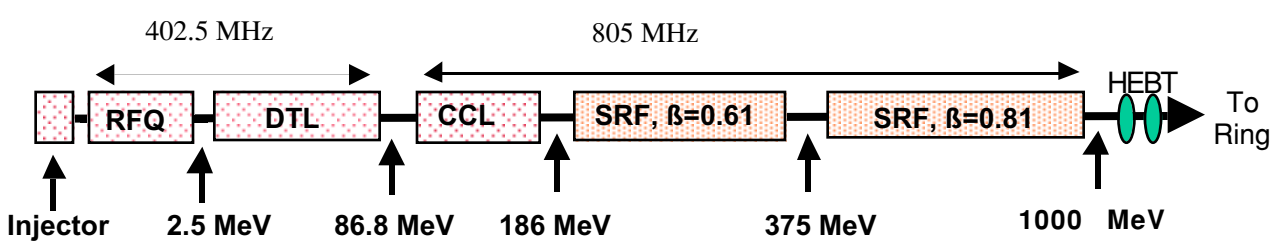

Figure 2-5. Layout of the superconducting SNS linac. The RFQ, DTL, and CCL are warm structures, and the two SRF regions are superconducting. The energies are at the end of each structure.

Table 2-3. Parameters of key components for SRF linac baseline, Oct. 2000

Component	Units	2-MW value
H^- ion source	Peak current	65 mA
2.5-MeV RFQ	Peak current	52 mA
Fast choppers — 2 (chopper & anti-chopper)	Beam-on duty factor	68%
87-MeV, 402.5-MHz DTL	tanks	6
186-MeV, 805-MHz CCL	RF modules	4
375-MeV, β=0.61 SRF cavities (11 cryostats)	RF modules	33
1000-Mev, β =0.81 SRF cavities (15 cryostats)	RF modules	59
402,5-MHz, 2.5-MW klystrons (incl. 1 RFQ)	number	7
805-MHz, 5.0-MW klystrons (incl. 2 HEBT)	number	6
805-MHz, 550-kW klystrons	number	92
Total installed RF peak power	MW	98

Many of the other linac parameters (e.g., repetition rate and duty factor) remained the same as the room temperature design, but with the SRF linac we were able to attain 2-MW beam power with less RF power than the 1-MW room-temperature design. Note that the beam-on duty factor (chopper transmission) has increased from 65% to 68% because of an increase in the ring circumference while maintaining the same extraction gap.

2.1.4 Reduction in Number of SRF Cavities

Because of project cost constraints, the number of high-beta SRF cavities was reduced for the initial installation, and the initial design power will be less than 2 MW. However, space is provided in the linac tunnel to increase the energy by adding additional SRF sections when funding permits. Depending on SRF cavity performance and addition of cavities and RF power, an energy of 1.3 GeV or higher may eventually be achieved. More detail on the linac design evolution can be found in [28]. The SRF linac design is described in [11,12].

2.1.5 Increase in SRF Cavity Gradient

With the reduction of number of cavities, the maximum energy that could be achieved was less than the minimum of 1 GeV desired for injection into the ring. To compensate for this, an R&D program has been initiated to increase the peak surface field in the high-beta SRF cavities from the nominal design of 27.5 MV/m to 35 MV/m. The baseline design, as of April 2001, assumes that this effort will be successful and the energy will reach 1 GeV with the fewer number of installed cavities. However, because of RF-power limitations, the peak current capability will be less than the 52 mA (shown in the table above) that would be required for 2 MW power. The baseline linac design with the increased cavity gradient is given in the table below. Note that although the beam current requirements from the ion source and RFQ have been reduced to conform to the RF-power limits, the physics and engineering designs of these components, as well as the linac structures, will accommodate the orighinal linac specification of 52 mA peak current. Therefore all abeam dynamics calculations use this 52-mA number for the maximum current.

Table 2-4. Parameters of key components for SRF linac baseline, April 2001

Component	Units	Value
H^- ion source	Peak current	~48 mA
2.5-MeV RFQ	Peak current	38 mA
Fast choppers — 2 (chopper & anti-chopper)	Beam-on duty factor	68%
87-MeV, 402.5-MHz DTL	tanks	6
186-MeV, 805-MHz CCL	RF modules	4
375-MeV, β=0.61 SRF cavities (11 cryostats)	RF modules	33
1000-Mev, β =0.81 SRF cavities (12 cryostats)	RF modules	48
402,5-MHz, 2.5-MW klystrons (incl. RFQ)	number	7
805-MHz, 5.0-MW klystrons (incl. HEBT)	number	6
805-MHzz, 550-kW klystrons	number	81
Total installed RF peak power	MW	92

The following are brief summaries of baseline design parameters that have been established by the physics requirements, working closely with the other WBS elements.

2.3.4 DTL Summary

The DTL is divided into 6 tanks, or RF modules. The parameters are summarized in Table 2-5.

Table 2-5. DTL design parameters

Structure frequency (MHz)	402.5
Energy (MeV)	86.8
Physical length (m)	36.6
Bore radius (cm)	1.25
Focusing lattice	FF0DD0
Lattice period length (at 402.5 Mha)	$6\beta\lambda$
Accelerating gradient E_o (MV/m)	1.5 to 3.0
Synchronous phase (deg)	-25 to -36
Ave. acceleration rate (MeV/m)	2.3

Each tank is composed of two or three sections along the length that are fastened together using metal seals at the interfaces. The structures consist of copper-plated steel tanks with copper drift tubes mounted on stainless-steel stems. One 2.5-MW klystron powers each tank, and each tank has a separate water-temperature-based resonance-control loop. Permanent-magnet quadrupoles (PMQs) are arranged in a FF0DD0 lattice, which allows placement of electromagnet steering and beam-position diagnostics within some of the 0 drift tubes. Each tank has a minimum of 4 steering magnets. Post couplers are used at every third drift tube to stabilize the field and to generate a ramp in the first tank for longitudinal matching of the beam from the RFQ and MEBT.

2.3.5 CCL Summary

The CCL accepts beam from the DTL at ~87 MeV and delivers it to the SRF linac at about 186 MeV. The basic parameters are shown in Table 2-6.

Table 2-6. CCL design parameters

Structure frequency (MHz)	805
Final energy (MeV)	185.6
Number of RF modules	4
Number of segments per module	12
Number of cells per segment	8
Physical length (m)	55.4
Bore radius(cm)	1.5
Focusing lattice	F0D0
Lattice period length	13βλ
Accelerating gradient E_o (MV/m)	3.1 to 3.8
Synchronous phase (deg)	-30 to -26
Ave. acceleration rate (MeV/m)	1.8

Bridge couplers between segments are 3-cell structures of length 2.5 βλ. RF power feeds the center cell of powered bridge couplers at the 1/4 and 3/4 points of each module. The total thermal load is ~˚1.1 MW at an operational temperature of ~˚80 F. Quadrupole focusing magnets and beam diagnostics are located in the spaces between the segments, and they are supported off the main girder separately from the cavities.

2.3.6 SRF Linac Summary

The SRF Linac accepts beam from the CCL at an energy of ~186 MeV. The design of the SRF linac has been a collaborative effort between Los Alamos, ORNL, and Jefferson Lab [11-13]. Based on $E_{max} \leq 27.5$ MV/m, we made trade studies to determine the most cost-effective combination of cavities, cryostats, and RF systems to achieve cost-effective performance. The result was two cavity types, one optimized for a beta of 0.61 and the other for a beta of 0.81. A transition energy of ~375 MeV maximized the final energy for a fixed-cost machine. After these parameters were fixed, cost constraints required eliminating three cryomodules, and the remaining high-beta cryomodules are now specified to have higher peak surface field than the original specification, up to 35 MV/m. The basic parameters are shown in Table 2-7.

Table 2-7. SRF-linac design parameters

Structure frequency (MHz)	805
Final energy (MeV)	1000
Number of RF modules	82
Number of cavities per module	1
Number of cells per cavity	6
Physical length (m)	158.9
Bore radius(cm)	4.3 to 4.9
Focusing lattice	FD0 (doublet)
Lattice period length	Fixed distance
Accelerating gradient E_o (MV/m)	10.5 to 12.8
Synchronous phase (deg)	-20 to -26
Ave. acceleration rate (MeV/m)	5.1

The design of the cavities and cryogenic system is being done by JLAB, and the description can be found in the DCD for WBS 1.4.10. Other aspects of the design affecting the RF power and the beam dynamics are included below.

2.3.7 RF System Summary

To reduce the cost of the RF system, we performed trade studies between number and power of klystrons, RF transmitters, power supplies, and cavity-control mechanisms. The final RF-system architecture, shown in the following table, is the result of these studies [14-16]. These numbers have been updated to reflect the current baseline design, which has 11 low-beta cryomodules but only 12 high-beta cryomodules instead of the originally planned 15. As the table shows, there is space in the SNS linac tunnel for 9 additional cryomodules (36 cavities) for a future upgrade. The final energy of an upgrade and the HVPS rating are speculative at this time.

Table 2-8. Summary of linac and RF-power architecture.

Structure	W_{final}	Total Length	Cells per Cavity	Cavities per Module	Modules	No of Klystrons	Structure Length
	MeV	m					m
DTL	86.8	36.6	60 to 22		6	6	36.6
CCL	185.6	91.9	8	12	4	4	55.4
SRF I	391.4	156.1	6	3	11	33	64.2
SRF II	1000	250.8	6	4	12	48	94.7
SRF upgrade	~1300	322.0	6	4	9	36	72.6

Structure	HVPS	HVPS Power	Transmitters	Klystrons	Klystron Power
		MW			MW
RFQ & DTL	3	10	7	7	2.5
CCL & HEBT	5	10	6	6	5.0
SRF I & II	7	10	14	81	0.55
SRF upgrade	3	12	6	36	0.60

Note: Length is measured from the front of the first DTL quadrupole. This is ~20 cm from the downstream face of the last MEBT quadrupole, which is taken as the starting point for beam dynamics calculations.

The following figure shows the nominal klystron and cavity power for the baseline SRF linac with peak current limited to the valudes in Table 2-4. .

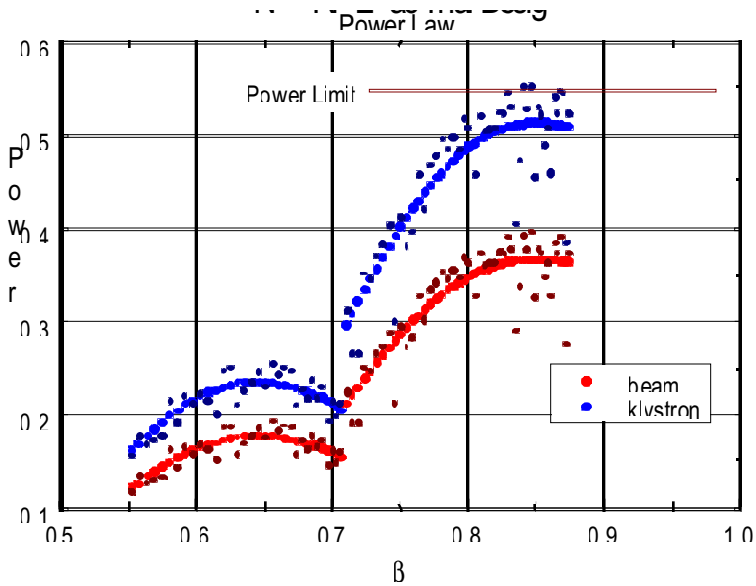

Figure 2-6. Graph of klystron (top) and cavity (bottom) power for the baseline SRF linac. The solid lines are nominal values, and the dots are random distributions expected.

2.3.8 Physics Calculations

An important part of the physics tasks is to perform beam simulations to optimize the structures and ensure proper matching between structures and at the ring injection. Examples of these calculations are shown below.

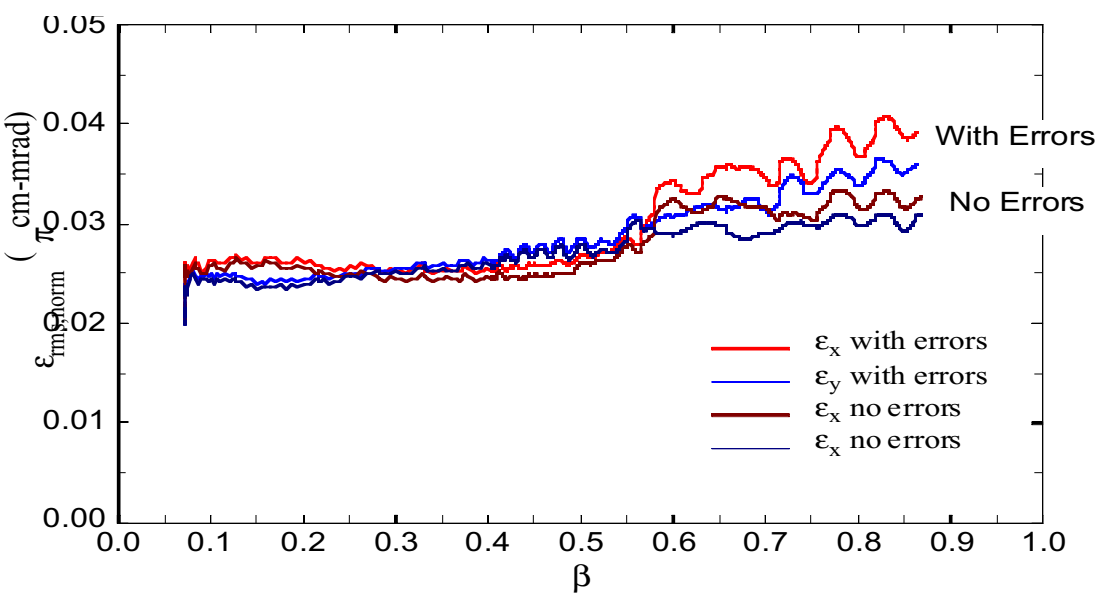

Figure 2-7. RMS transverse emittance as functions of β for simulations with and without errors in the linac. In each set of curves (with and without errors), the top curve is the x emittance and the bottom curve is the y emittance.

These calculations help to set the mechanical error tolerances in the linac. For the calculations above, which meet the linac output emittance requirement, the tolerances are:

Table 2-9. Mechanical tolerances used for error calculations.

	Units	MEBT	DTL	CCL	SRF
Quad Errors:					
Displacement	cm	–	–	–	–
Pitch & yaw	deg.	0.57	0.57	0.57	0.57
Roll	deg.	0.25	0.29	0.29	0.29
Gradient	%	1.73	0*	0.5	0.5
Cavity Errors, Static:		–	–	–	–
Cavity Errors, Dynamic:					
Phase	deg.	0.5	0.5	0.5	0.5
Amplitude	%	0.5	0.5	0.5	0.5
Tilt	%	–	0.1	0.	0.

**** Equivalent to 2% sorted.***

The output phase-space and real-space distributions from these calculations are shown below.

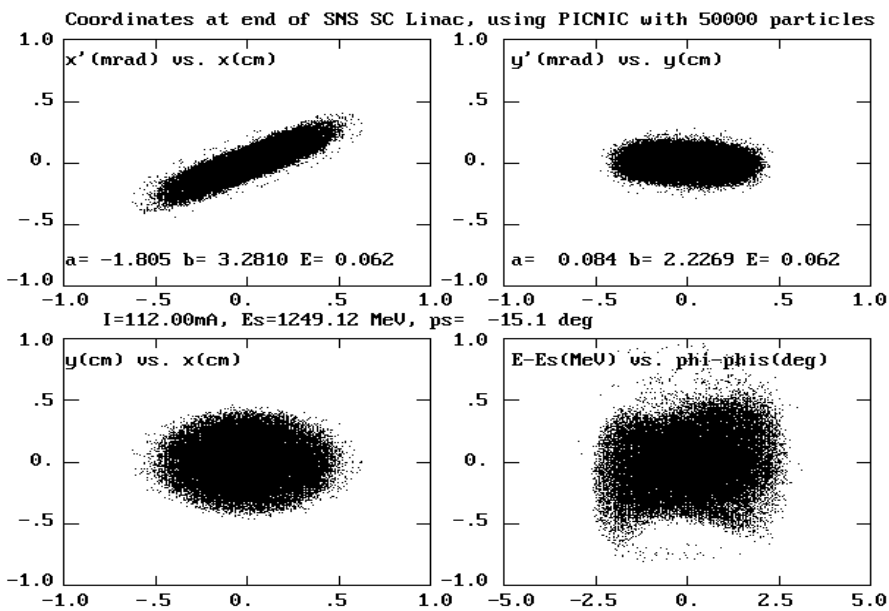

Figure 2-8. Real- and phase-space distributions at the end of the SRF linac using the 3D space-charge code PICNIC.

Section 2.3 References

[1] B. Appleton, *The National Spallation Neutron Source,* 1997 Particle Accelerator Conference Vancouver, BC, May 1997. 20.

[2] J. Alonso, *Status Report on the Spallation Neutron Source (SNS) Project,* 1998 European Particle Accelerator Conference, Stockholm, Sweden, June 1998, 493.

[3] A. Jason, *A Linac for the SNS,* 1998 1998 International Linac Conference, Chicago, IL, August 1998, 415.

[4] R. Hardekopf, *Linac Design for the SNS,* Second Intl. Topical Meeting on Nuclear Applications of Accelerator Technology, Gatlinburg, TN, September 1998, 208.

[5] R. Hardekopf, D. Stout, and T. Sutton, *Project Status of the 1-GeV SNS Linac,* 1999 Particle Accelerator Conference, New York, NY, March 1999, 3597.

[6] J. Billen, H Takeda, T. Bhatia, *Linac RF Structures for the SNS,* 1999 Particle Accelerator Conference, New York, NY, March 1999, 3585.

[7] N. Bultman, Z. Chen, M. Collier, J. Erickson, A. Guthrie, W. Hunter, T. Ilg, R. Meyer, N. Snodgrass, *Mechanical Engineering of the Linac for the SNS,* 1999 Particle Accelerator Conference, New York, NY, March 1999, 3594.

[8] M. Lynch, P. Tallerico, W. Reass, *SNS RF System Overview,* 1999 Particle Accelerator Conference, New York, NY, March 1999, 453.

[9] R. L. Kustom, *An Overview of the Spallation Neutron Source Project,* XX International Linac Conference, Monterey, CA, August 2000, 321.

[10] J. Stovall, S. Nath, H. Takeda, J. Billen, L. Young, M. Lynch, D. Rees, J. Galambos, D. Jeon, D. Raparia, J. Wei, R. Sundelin, K. Crandall, C. Pagani, P. Pierini, *Superconducting Linac for the SNS,* XX International Linac Conference, Monterey, CA, August 2000, 605.

[11] R. Hardekopf, *Progress in Design of the SNS Linac*, ICANS-XV, Tsukuba, Japan, November 2000 (to be published).

[12] J. Galambos, J. Stovall, S. Nath, H. Takeda, J. Billen, L. Young, J. Jeon, J. Wei, K. Crandall, *The SNS Superconducting Linac Architecture* ICANS-XV, Tsukuba, Japan, November 2000 (to be published).

[13] R. Sundelin, *Superconducting Linac,* ICANS-XV, Tsukuba, Japan, November 2000 (to be published).

[14] M. Lynch, W. Reass, D. Rees, A. Regan, P. Tallerico, *The Spallation Neutron Source (SNS) Linac RF System,* XX International Linac Conference, Monterey, CA, August 2000, 965.

[15] A. Regan, S. Kwon, T. Rohley, Y. Wang, M. Prokop, D. Thomson, *Design of the SNS Normal Conducting Linac RF Control System,* XX International Linac Conference, Monterey, CA, August 2000, 534.

[16] W. Reass, J. Doss, R. Gribble, M. Lynch, P. Tallerico, Progress on the 140 kV, 10-Megawatt Peak, 1-Megawatt Average, Polyphase Quasi-Resonant Bridge, Boost Converter/Modulator for the Spallation Neutron Source (SNS) Klystron Power System, XX International Linac Conference, Monterey, CA, August 2000, 995.

2.4 Linac Commissioning (WBS 1.4.5.4)

Commissioning procedures must be developed for setting phase and amplitude of the RF cavities and for determining and optimizing beam parameters.

The design of a diagnostic-plate for commissioning of the linac is shown in Figure 2-9. After the first DTL tank we can run full duty-factor beam into the 16-kW beam stop, but for higher-energy modules the commissioning will be limited to low duty factors.

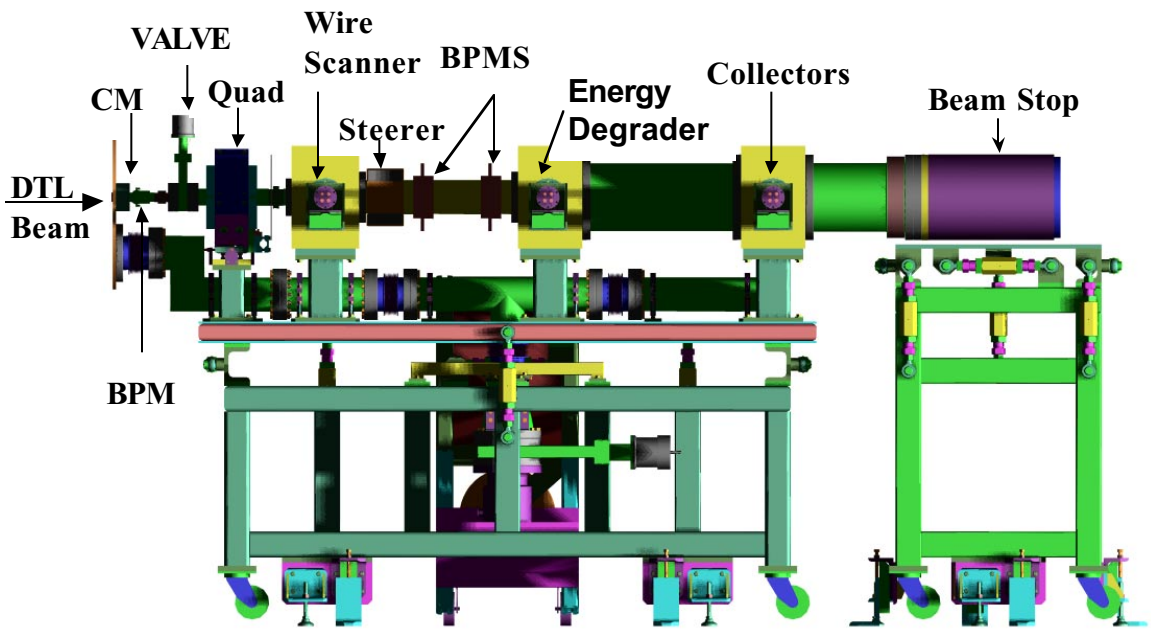

Figure 2-9. Preliminary layout of diagnostic plate for commissioning DTL Tank 1.

The following table gives the diagnostics used for each type of measurement.

Table 2-10. Measurements and diagnostics on the D-plate.

Measurement	Diagnostics used
Beam profiles	Wire scanners
Beam current	Toroid Faraday cup, with energy degrader foil
Beam synchronous phase	BPM
Beam energy	BPM time of flight (20 cm flight path)
Emittance	Slits and collectors
Beam image	View screen
Halo	Segmented halo scraper (fixed aperture)
Beam stop	36 mA, 7.5 MeV, 1 ms, 60 Hz (16 kW)

3.0 DESIGN REQUIREMENTS

3.1 General Requirements

Overall specifications for the linac system for the baseline (~1.5 MW) SNS are given in Table 3-1.

Table 3-1. Overall linac requirements

Input H^- energy	2.5 MeV
Output H^- Energy	1000 MeV
Average beam current	1.56 mA
Average beam power	1.56 MW
Macropulse repetition rate	60 Hz
Macropulse beam length	1.0 ms
Beam duty factor	6.0 %
Chopper transmission	68%
Chopper period	945 ns
Peak macropulse current	38 mA
Average macropulse current	26 mA
Beam losses	< 1 W/m average
Output beam transverse normalized emittance	< 0.5 ,, mm-mr
Energy Jitter	< – 2.2 MeV
RMS Energy Spread	0.33 MeV
Phase Width	12.6 deg
Linac tunnel length	322 m
Linac tunnel width × height	14 × 10 ft
Beam Height	50 inches

Other physics requirements include:

1. Specified (SNS Parameter List) emittance from the MEBT to the HEBT;
2. Use of optimum accelerating gradient to keep the total cost low; and
3. Linac design must be nearly current independent.

There are additional desires and requirements that lead to specific constraints on the linac design:

- The polarity of the first DTL quadrupole must be horizontally focusing, consistent with the chosen orientations of the MEBT quadrupoles; and
- The polarity of the last SRF quadrupole must be horizontally focusing, consistent with the orientation of the HEBT quadrupoles.

Although the baseline nominal beam energy is 1000 MeV, the SRF linac can accommodate different combinations of beam energy, beam current, and phase of the RF as shown in the following figure. This figure illustrates variations in output energy as a function of cavity peak surface field, ion

current, and RF phase. The truncated design point using only 12 high-beta cryomodules (current design) is the energy that would be obtained (at —30 degrees phase) if the cavities only performed at the nominal 27.5 MV/m.

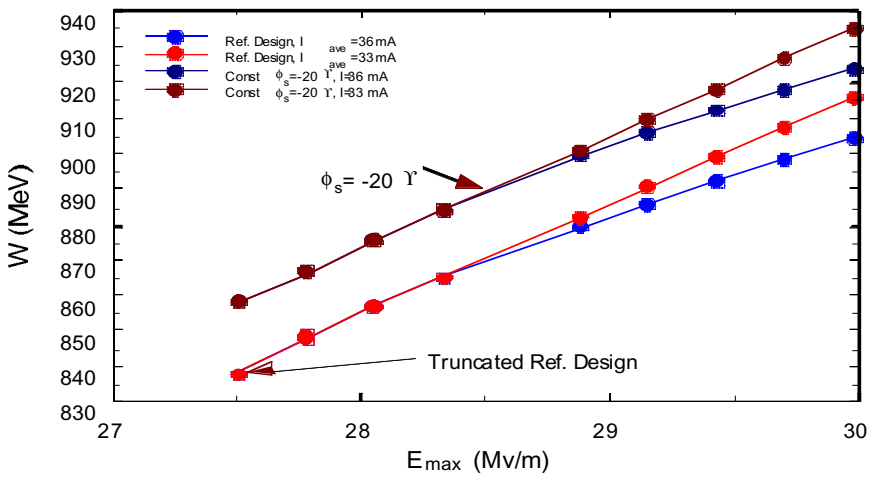

Figure 3-1. Variation in linac output energy from different RF phase.

However, the cavity upgrade program discussed earlier is expected to produce high-beta SRF cavities that average 35 MV/m (+2.5, -7.5 MV/m) with a probable distribution shown in the following figure.

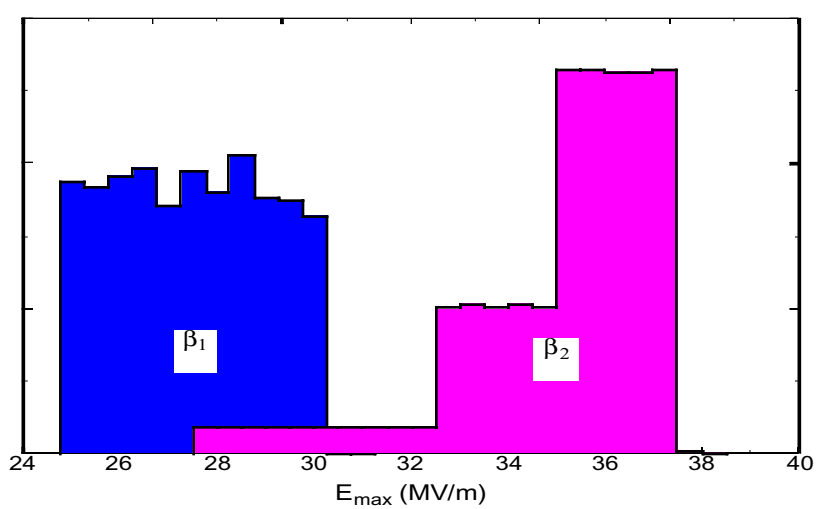

Figure 3-2. Probable distribution of SRF cavity peak surface fields for the low-beta and high-beta cavities used in the physics calculations for the baseline design of April 2001.

Requirements related to specific systems are listed in the sections that follow.

3.2 MEBT Chopper Requirements (WBS 1.4.5.1)

The MEBT chopper system function is to remove the beam completely for selected time periods from the MEBT, at the beam energy of 2.5 MeV (β=0.073), to provide a gap in the ring filling needed for extraction. The chopper is required to rise from 2% to 98% (and fall) in less than 10 ns to accommodate the 402.5-MHz beam structure. A chopping duty factor, during the macropulse, of 32% (68% beam on) at the 1.058 MHz ring revolution frequency is also required. Both a chopper and anti-chopper are required. The chopper and anti-chopper must fit within a space of 0.35 m in the MEBT. Specific chopper system requirements are summarized in Table 3-2.

Table 3-2. Chopper system requirements.

Number of choppers	2 (chopper & anti-chopper)
Type	Traveling wave
Gap	1.8 cm
Length	0.35 m
Deflection	18 mrad
Rise / fall time (2%—98%)	10 ns
Overall duty factor	6%
Duty factor during macropulse	32% chopper on (nominal)
Total deflection voltage	± 2350 V
Post chopper off/on beam-current ratio	1.0E-4
Frequency	1.058 MHz

The chopper system consists of a traveling-wave current structure and a voltage pulse generator (modulator). Using a planar structure, with a total plate-to-plate gap of 1.8 cm and a 2350-V deflecting voltage on each plate, the chopper will provide a deflection of 18.0 mrad. A traveling-wave current structure minimizes transit-time effects. The MEBT anti-chopper function is to return the uncollimated portion of the chopped beam to the axis, which corrects for small errors in the timing system and small tails in the chopper pulse

At the start of the macropulse, it is necessary to increase the beam intensity from zero to maximum in about 20 μs to accommodate beam loading. This is done by increasing the width of the chopper deflection pulse from full to the nominal 32%.

Additional chopper pulser requirements are given in Appendix A. This document is from the request for quotation No. LANL RFQ 16086-SOL-00 8C that became the order placed with DEI, Inc. of Boulder, CO.

3.3 Linac Diagnostics Requirements (WBS 1.4.5.2)

3.5.1 General

The linac beam diagnostics include systems to measure beam current, beam position, beam profile, beam loss, beam energy, beam phase, chopper gap width, and cleanliness of the chopper notch. The linac beam diagnostics will be designed for the following uses:

Initial turn-on and commissioning of linac and ring,
Normal facility operation (non-interceptive diagnostics),
Detection of off-normal operation,
Recovery from off-normal operation, and
Linac development and upgrade.

Beam diagnostics form an integral part of accelerator design and operation. Diagnostics interprets the physics requirements for detecting both normal and off-normal operation of the beam and builds instruments to accomplish these requirements. Many of these systems are distributed throughout the linac and the beamline to the ring (HEBT). For a high current accelerator such as the SNS, the type and placement of beam diagnostics is crucial to provide rapid, accurate information on beam characteristics with minimum interception of the beam. Following several SNS collaboration meetings to discuss beam control and commissioning requirements for the linac, Los Alamos generated the following list for the linac beam diagnostics

Table 3-3. WBS 1.4.5 Diagnostics Requirements

	MEBT	D-Plate	DTL	CCL	SCL	HEBT
BPM & Phase	6 **	2	10	16	32	****
Beam Loss Monitor *	***		12	24	64	****
Beam Current Monitor	**	0	6	2	1	****
Wire scanner (X & Y)	5 **	1	5	8	32	****
Harp (X & Y)						4 *****
Video Profile	***	1				
Beam-in-Gap						1
Faraday Cup		1	5	1		
Emittance	***	1				

* BLM system supplied by WBS 1.5; numbers are for reference only
** WBS 1.4.5 supplies electronics only
*** Specified by WBS 1.3
**** Specified by WBS 1.5
***** Two in HEBT, Two in RTBT

From the table, one can see that some of these diagnostics are required in fairly large numbers. This places a premium on low-cost instruments that are easy to fabricate and maintain. The budget for linac diagnostics is about $10 M, including design, fabrication, installation, and checkout. This is less than 5% of the overall linac cost, estimated to be ~$230 M.

The beam diagnostics must function under a variety of beam parameters, depending on the beam mode. These parameters are defined under Commissioning Requirements (Section 3.5).

3.3.2 Definitions

The beam diagnostics requirements are divided into three parts: minimum requirements, target requirements, and desired requirements.

It is necessary to meet the **minimum requirements** to commission and tune the SNS facility at the most basic level. If the minimum requirements are not met then fabrication and installation of the system should be reconsidered.

It is necessary to meet the **target requirements** for smooth commissioning and operation of the SNS facility and for maintainability of the diagnostics system.

The **desired requirements** provide further enhancements of the diagnostics system that would allow improved understanding of the beam dynamics or improved beam or instrument troubleshooting capability. These requirements should be considered only if they do not impact the reliability, cost, or schedule.

Following is a description of each of these devices with the known requirements.

3.5.3 Device Requirements

Beam Position and Phase Measurement. Beam position measurements are required to determine the position of the beam centroid in the linac and to correct beam position offset errors via closed-loop control of steering dipole magnets. Beam steering errors are generally caused by misalignments of the magnetic focusing elements. Beam energy measurements are required throughout the linac to carry out initial commissioning and to maintain the proper amplitude and phase settings on the RF systems. Because the RF amplitude requirement is –0.5%, and the nominal energy gain per klystron is 15 to 20 MeV, the energy measurement precision is typically a few percentage points of the beam energy gain. For most of the linac, the best measurement of beam energy is to measure the beam velocity by determining the time-of-flight between two identical RF beam pickups with known separation, using the difference of the 402.5-MHz beam current modulation between pickups as a measure of the flight time. Requirements are as follows.

Table 3-4. BPM Requirements

	Minimum	**Target**	**Desired**
Operating modes	DTL CCL SRF	See below.	

	Ring commissioning Troubleshooting Nominal Development Unchopped beam		
Peak beam current range	10 mA to 60 mA	> 300 ns pulse length. Reduced performance for lower current beams.	
Bandwidth (MHz)	3	5	
Position measurement			
Accuracy[1]	– 3% of aperture radius	– 1% of aperture radius	
Resolution[1]	–0.5% of aperture radius	–0.1% of aperture radius	
Phase meas. at 402.5 and 805 MHz			
Accuracy	– 4 degrees	– 2 degrees	
Resolution	– 0.5 degrees	– 0.2 degrees	
Intensity measurement			
Accuracy[2]	7	1	
Resolution[2]	3	0.1	
Update rate (Hz)	4	10 (see note 3)	60

[1] For positions within 50% of aperture radius. Reduced performance for positions between 50% of 90% of aperture radius.
[2] For 52 mA peak beam current. Reduced performance at lower currents.
[3] All BPM instruments must be synchronized to sample the same macropulse.

Other target requirements are:

1. Single data take at given point on given mini pulse.
2. Sample given point on given minipulse for given range of minipulses.
3. Average of above.
4. Maximum acquisition rate for duration of several (~10) minipulses.
5. Auto test feature sufficient to check out cabling to pickup, and connection through control system to user interface.
6. No electronics in beam tunnel.
7. RTDL/event link monitor for timing.
8. Data sent to control system should have a date and time stamp for each data point, accurate enough to ensure that the data from all BPMs is within +/-50 ns on the same macropulse.
9. Measure beam in the gap at the 1% level (see note 1 above).
10. Raw data output available on command, at reduced update rates (~1 Hz).
11. Robust mode that does not rely on accurate timing information.

Beam Loss Measurement. Beam loss measurements are required to determine whether there is excess beam halo scraping on the linac RF structure or beam pipe, whether there are excess beam losses as a result of RF amplitude or phase errors or transverse matching errors, or whether there is an obstruction in the beam pipe, including poor vacuum. Because the BLM system is an input to the fast protect system to shut down the accelerator in case of an accelerator component failure, it must be very robust and reliable. Desirable attributes include radiation hardness, wide dynamic range, and low calibration drift. Except in a few specific locations, a wide-bandwidth (multi-MHz) response is not necessary. Requirements are TBD by BNL.

Beam Current Monitors. Beam current monitors determine the peak and average macropulse current; determine transmission through the chopper, DTL, and CCL; and verify the shape of the chopper gap. The beam currents need to be measured with about 0.5% to 1% accuracy, and the chopper gap width needs to be measured to within 2.5 ns. Furthermore, the sharpness of the edges of the chopper gap needs to be observed to determine if partial micropulses are present. Requirements are as follows.

Table 3-5. BCM requirements

Requirement	Minimum	Target
Peak beam current range	15 to 60 mA. 1 to 15 mA reduced performance	
Bandwidth	5 MHz	7 MHz
Minimum minipulse length	300 ns	
Droop		0.1%/ms after droop compensation and baseline correction
Current measurement accuracy	1% of full scale	
Current measurement resolution	0.1%	
Aperture radii	12.5 mm DTL 15 mm CCL 36.5 mm SCL	
Update rate	4 Hz	10 Hz

Other target requirements are:

1. Sample given point(s) on given minipulse for given range of minipulses. Permits averaging of data pulse to pulse.
2. Maximum acquisition rate for duration of several (~10) macropulses.
3. Auto test feature sufficient to check out cabling to pickup, and connection through control system to user interface (expected to be exercised during inter-pulse period). Data stored for request by control system.
4. No electronics in beam tunnel.
5. RTDL/event link monitor for timing.
6. Data sent to control system should have a date and time stamp for each data point, accurate enough to specify macropulse.
7. Raw data output available on command, at reduced update rates (~1 Hz).

Desired requirements - target requirements as above plus:

1. Maximum acquisition rate for duration of entire macropulse with circular buffer storage sufficient to store a minimum of 60 macropulses (~1 sec.).

Beam Profile Measurement. Beam profile measurements are required to verify proper transverse focusing and matching of the magnetic focusing lattices throughout the linac. Profile measurements can

also be used to indirectly determine the beam emittance of a matched beam in a periodic focusing lattice. Profile measurements with a –10% rms width accuracy are required to verify emittances to –20%. Requirements for the wire scanners are given below.

Table 3-6. Wire scanner requirements

Requirement	Minimum	Target
Installed units	Partial installation in SCL. 4 units at beginning of low beta region, 4 units at beginning of high beta region.	All stations fully populated
Scanning modes	Fly mode and step mode. Step mode will average given number of beam pulses per step.	
Peak beam current range	15 to 60 mA.	5 to 60 mA
Beam pulse length	Limited by wire heating. At least 50 us ramped for DTL and CCL units, at least 100 us ramped for SCL units.	
Position accuracy[2]	±2 mm	
Width accuracy[2]	15%	10%
Bandwidth	35 kHz (see note 1 below).	
Positioning accuracy of wire	1 mm.	0.25 mm
Position read back accuracy	1 mm.	0.25 mm
Wire positioning rate	2 Hz in step mode.	5 Hz
Number of signal wires	3 (x, y, and x-y).	
Wire type and diameter	Not specified at this time.	
Signal wire bias	~ 100 V dc, bi-polar.	
Stroke	All wires must scan entire beam pipe aperture. The fork and wire mounting fixtures must never be in the beam pipe aperture.	

[1] Need 35 kHz bandwidth to resolve features at the 10 us level, which is required to get the beam profile after the 30 us ramp is completed for DTL and CCL commissioning beam parameters.
[2] When data is fitted with a Gaussian or similar profile function.

Harps. The harps measure profiles and positions for the beams entering the beam dumps and spallation target. Harps are capable of measuring the beam profile in a single pulse — an important consideration for low rep-rate beams, such as those entering the beam dumps. Requirements for the harp systems are given below:

Table 3-7. Harp system requirements

	Minimum	Target
Peak beam current range	20 to 60 mA.	10 to 60 mA
Beam pulse length range (linac, injection)	50 to 1000 us (H^- beams)	10 to 1000 us
Beam pulse length, nominal (extr., target)	1 us. (H^+ beams)	
Intensity range (ppp)	3E12 to 2E14.	3E11 to 2E14
Beam size, nominal (cm, –2σ)	linac: x = 1.4, y = 3.4 ring inj.: x = 3, y = 3 ring extr.: x = 8.1, y = 8.6 tgt.: x = 20, y = 4	
Position range	± beam pipe radius (linac, inj., extr.),	

	±140 x 64 mm (tgt.).	
Position accuracy[1]	±3 mm	±1 mm
Position resolution[1]	±1.5 mm	±0.5 mm
Width accuracy[1]	20%	10%
Width resolution[1]	10%	5%
Date structure	Single shot.	
Number of signal planes	3 (x, y, and x-y).	

[1] When data is fitted with a Gaussian or other similar function.

Beam-in-Gap Measurement. The chopper gap in the beam should be clear of H^- to about 1 part in 10,000 in order to minimize electron-induced instabilities and beam losses at extraction from the accumulator ring. Although a wide-band current monitor at the end of the linac can resolve individual H^- microbunches, and therefore measure the detailed shape of the edges of the chopper gap, it cannot determine the cleanliness of the gap at the required 1 part in 10,000 level. For this, a special diagnostic is required to laser-strip part of the beam in the 90 degree bend.

3.4 Linac Physics Requirements (WBS 1.4.5.3)

General requirements for the linac are listed in Section 3.0. The following expands on these requirements that apply to the specific structures chosen for the linac.

The linac follows the MEBT and accelerates the H^- beam from an energy of 2.5˚MeV to 1000 MeV. Three types of RF structure perform this task, a DTL, a CCL, and a SRF linac.

3.4.1 DTL Requirements

The first structure is a 402.5-MHz DTL, which accelerates the beam to 86.8 MeV. The 402.5-MHz DTL will be of conventional design. Cells are of length $\beta\lambda$ and the transverse focusing period has a length of $6\beta\lambda$ at 402.5 MHz. A focusing period spans six RF gaps and has a focusing quadrupole inside each of the first two drift tubes, followed by a drift space, followed by defocusing quadrupoles inside the next two drift tubes, and again followed by a drift space. This layout is usually called a FF0DD0 lattice. The drift space will be instrumented with steering dipoles and diagnostics. The DTL will have post couplers to stabilize and tune the longitudinal field distribution.

Specific DTL requirements are listed in Table 3-67. Appendix E provides the Geometric Drift-Tube tables. Appendix G contains lists of DTL dynamic, geometric, and beam envelope parameters that can be used for accelerator physics analysis and geometrical layouts.

The DTL drift tubes shield the beam from the decelerating RF field, and house magnets and diagnostic devices. The permanent magnet quadrupole system, consisting of permanent magnet quadrupoles (PMQ) located inside the drift tubes, must focus the beam transversely within the DTL. The PMQs must withstand the operational radiation environment. Twenty-four steering dipoles will be used to steer the beam, and they will be located in the last four open drift tubes in each tank.

Table 3-7. DTL requirements

Input Energy	2.5 MeV
Structure frequency (MHz)	402.5
Output Energy (MeV)	86.8
Physical length (m)	36.6
Number of tanks	6
Field stabilization	Post couplers
Total number of cells	214
Bore radius (cm)	1.25
Focusing lattice	FF0DD0
Lattice period length	6βλ
Quadrupole Gradient (T/m)	TBD
First quadrupole for H^- in the horizontal plane	Focusing
Number of PMQs	149
Accelerating gradient Eo (MV/m)	3.6
Ave. acceleration rate (MeV/m)	2.3

3.4.2 CCL Requirements

The CCL is an 805-MHz structure designed to accelerate the beam from 86.8˚to 186 MeV.
The CCL uses a FODO transverse focusing lattice with a period of length 13 βλ at 805 MHz. Electromagnetic quadrupole singlets and diagnostic elements occupy the spaces between segments of RF structure. Table 4.3-3 presents the structure design parameters.
The entire CCL accelerator is separated into 4 discrete, independent modules. Each module is sized to use the power output of one 5-MW klystron. Each module is separated into twelve, 8-cell segments, and the length of each segment is predicated upon a transverse-focusing periodicity of 13 βλ, including inter-segment power couplers, which are 3-cell structures of length 2.5 βλ. The CCL consists of 4 resonant structures (modules) and a total of 48 segments. The entire structure will be made of oxygen free electrolytic (OFE) copper. The accelerator segment forms the basic building block, as a brazed assembly, for the accelerator. Specific CCL requirements are presented in the following table.

Table 3-8. CCL Requirements

Structure frequency (MHz)	805
Energy (MeV)	185.6
Physical length (m)	55.4 m
Bore radius (cm)	1.75
Focusing lattice	F0D0
Lattice period length	13βλ
Accelerating gradient Eo (MV/m)	3.06 to 3.77

Synchronous phase (deg)	-30 to -24
Ave. acceleration rate (MeV/m)	1.82
Peak structure-power loss (MW)	1.1

The expected output energy spread and transverse and longitudinal emittance are TBD. Appendix F provides the geometric dimension tables for the CCL. Appendix G provides cavity and quadrupole lattice parameters for the entire linac. These parameters can be used for accelerator physics analysis and geometrical layouts.

3.4.3 SRF Linac Requirements

For the superconducting RF linac, refer to the JLAB Design Criteria Document.

3.5 Linac Commissioning Requirements (WBS 1.4.5.4)

The beam requirements for operation and commissioning are as follows.

3.5.1 Nominal Beam Parameters for Normal Operation:

Peak beam current:	38 mA beam current averaged over 690 ns mini pulse. [note: physics design will accommodate up to 52 mA]
Mini pulse period	~950 ns.
Mini pulses per pulse	~1000.
Pulse length	1 ms.
Repitition rate	60 Hz.

3.5.2 Commissioning Mode Beam Parameters (all H_-^- beams):

MEBT commissioning:	1 — 60 Hz, 1 to a few minipulses or up to 100 us overall pulse length, 20 — 30 us ramp; 10 to 60 mA peak (as measured during mini pulse); 300 ns to unchopped mini pulses.
DTL commissioning:	1 — 60 Hz, 1 to a few minipulses or up to 50 us overall pulse length, 20 — 30 us ramp; 10 to 60 mA peak (as measured during mini pulse); 300 ns to unchopped mini pulses.
CCL commissioning:	1 Hz, 1 to a few minipulses or up to 50 us overall pulse length, 20 — 30 us ramp; 10 to 60 mA peak (as measured during mini pulse); 300 ns to unchopped mini pulses; up to 330˚W avg. power.
SRF commissioning:	1 Hz, 1 to a few minipulses or up to 100 us overall pulse length, 100 us ramp; 10 to 60 mA peak (as measured during mini pulse); 300 ns to unchopped minipulses.
Ring commissioning:	1 — 10 Hz, 1 to a few minipulses or up to several hundred us overall pulse length, 100 us ramp; 10 to 60 mA peak (as measured during mini pulse); 300 to 700 ns long minipulses.

3.5.3 Troubleshooting Beam Parameters:

Same as commissioning beam parameters.

3.5.4 Diagnostic Plate

The linac Diagnostics Plate (D-Plate) will be used for DTL tank-1 commissioning and possibly for future development whenever DTL tank 2 is not installed. The 16-kW beam stop on the Diagnostics Plate is the only beam stop capable of running at the full beam current (36 mA, 1 ms, 60 Hz) prior to commissioning both the ring and the spallation neutron target. The 1-GeV linac 0¡ beam stop is rated at about 7 kW (36 mA, 100 ms, 2 Hz). Intermediate beam stops (Faraday cups), at 86 and 185 MeV are rated only at 100 to 300 watts (limited by activation).

3.5.5 DTL Tank 1 Commissioning

Initial turn-on and commissioning measurements for the first DTL tank are as follows. Commissioning of subsequent linac sections is TBD.

Table 3-9. Commissioning requirements for DTL tank 1.

Aperture scans (x, x , y, y)	Faraday cup with energy degrader
Transmission efficiency	Differential current measurements (toroids) Faraday cup with energy degrader Beam loss measurements (Ion chamber)
Beam size (transverse matching)	Wire scanners
Phase, energy and amplitude scans	Beam synchronous phase Beam energy (time of flight) Delta-E delta-t measurements

Commissioning the DTL requires making measurements of the output beam synchronous phase and energy, while varying the input beam synchronous phase and the RF amplitude. The RF static amplitude and phase must be set to about –2% and –2 degrees respectively.

4.0 SYSTEM INTERFACES

This section contains the interface criteria documents (ICDs) for WBS 1.4.5. Note that many of the physical interfaces for mechanical systems and RF systems are contained in the respective WBS DCDs and ICDs. This section primarily addresses physics interfaces, including only mechanical interfaces that pertain to the chopper and diagnostics.

4.1 Interfaces within Linac Systems (WBS 1.4)

4.1.1 Interfaces with RF Power (WBS 1.4.1)

4.1.1.1 Chopper Interfaces with RF Power

No interfaces have been identified. The MEVT chopper will run asynchronously with the linac RF system.

4.1.1.2 Diagnostics Interfaces with RF Power

Diagnostics requires the 25-MHz reference signal from RF controls (1.4.1.3). This signal must be available throughout the linac tunnel and klystron galleries as part of the RF reference system.

4.1.1.3 Physics Interfaces with RF Power

The structure power generated from physics calculations that form the basis for the RF-power system is listed in Appendix C.

4.1.1.4 Commissioning Interfaces with RF Power

Commissioning requires a 402.5-MHz synchronization signal from RF controls (1.4.1.3). This signal must be available throughout the linac tunnel and klystron galleries as part of the RF reference system. The commissioning process sets phase and amplitude for each RF cavity.

4.1.2 Interfaces with DTL (WBS 1.4.2)

4.1.2.1 Chopper Interfaces with DTL.

No interfaces have been identified. The chopper acts with the other Front-End systems to limit beam current in the DTL.

4.1.2.2 Diagnostics Interfaces with DTL

Diagnostics are incorporated within some of the drift tubes (BPMs) and in the end walls (BCMs) of the DTLs to provide beam information. Diagnostics are also provided in the spaces between DTL tanks. Because of the close tolerances, DTL diagnostics are designed into the DTL drift tubes and inter-tank sections, so the interfaces are strictly controlled by the DTL designers.

Diagnostics locations in the DTL are in Appendix C

The figure below shows an example of a drift tube containing a BPM with the interfaces noted.

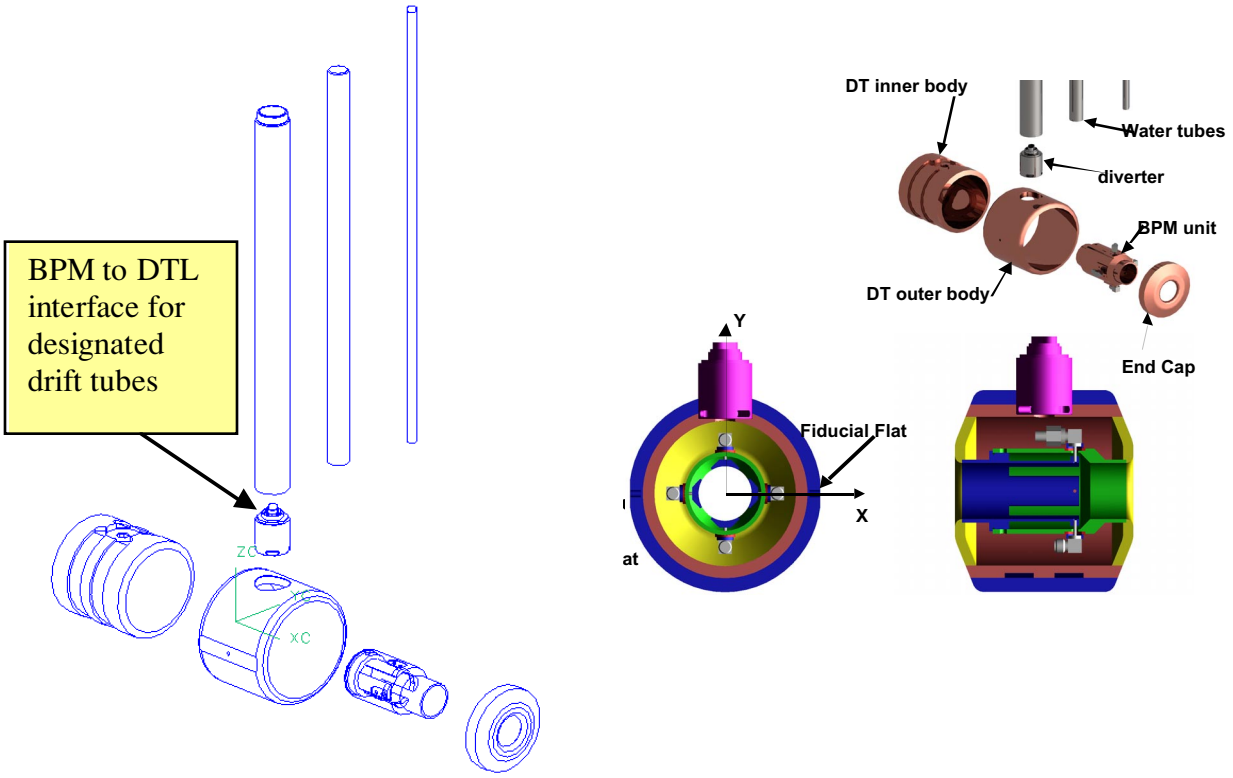

Figure 4-1. Exploded views of drift tube containing a BPM. For these special drift tubes, the diagnostic to DTL interface is at the connection to the drift tube stem as shown.

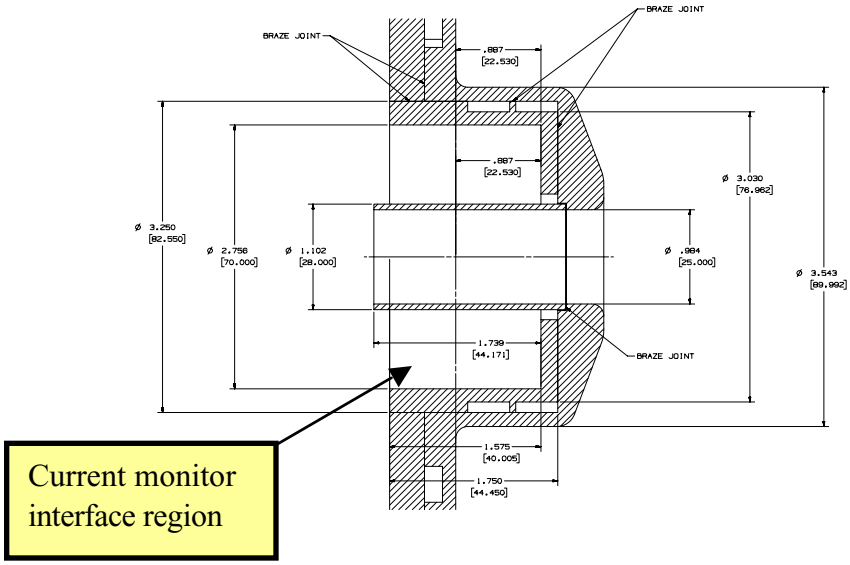

Figure 4-1. End wall of a DTL tank showing the space for current monitor.

The D-plate has an interface with DTL tank 1 (and possible tank 3 and tank 6) for commissioning purposes. For tank 1, this interface is at the end of the intertank section following tank 1. See figure below.

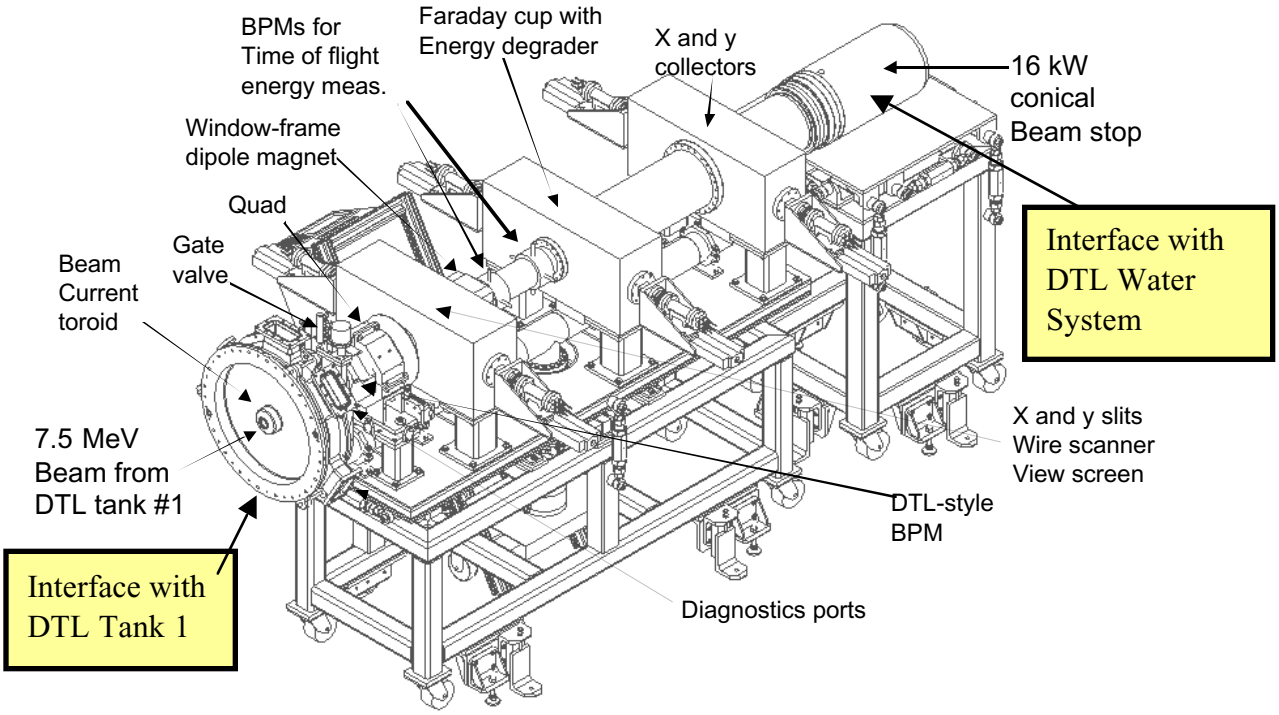

Figure 4-2 Diagnostic plate interfaces with DTL Tank 1.

The D-plate beam stop is provided cooling water from the DTL water system as indicated in the

figure above. The interface is TBD.

For other inter-DTL tank sections, the diagnostics interface is at the flange in the inter-tank box provided for diagnostic devices. See figure below

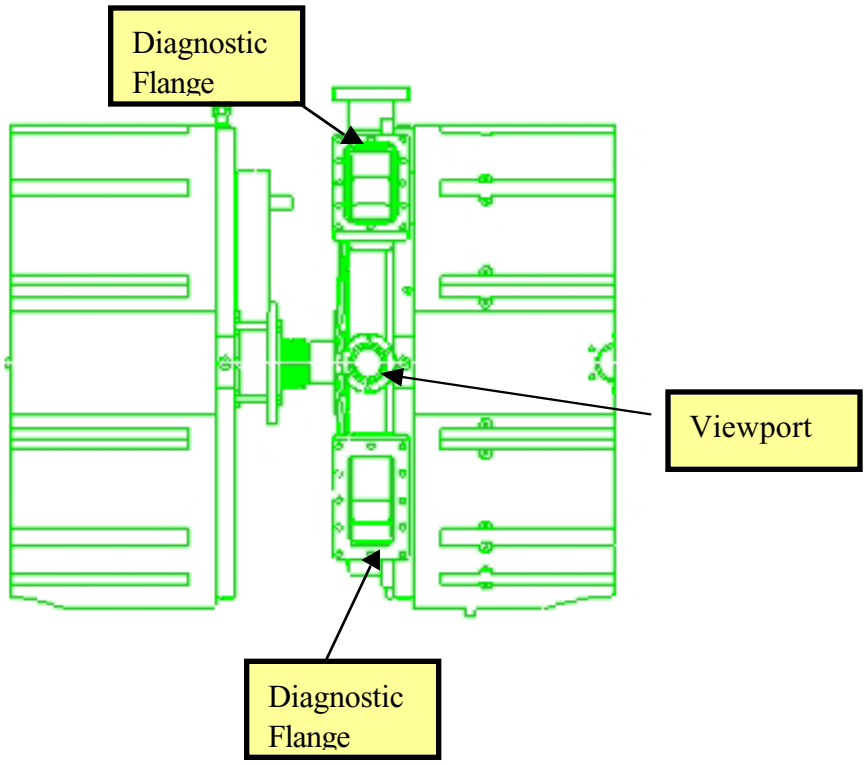

Figure 4-3 Diagnostics interfaces with typical DTL inter-tank region.

4.1.2.3 Physics Interfaces with DTL

The physics parameters for the DTL are given in the requirements section.

4.1.2.4 Commissioning Interfaces with DTL

The commissioning process establishes set points and overall operation of the DTL.

4.1.3 Interfaces with Coupled-Cavity Linac (WBS 1.4.4)

4.1.3.1 Chopper Interfaces with CCL.

No interfaces have been identified. The chopper acts with the other Front-End systems to limit beam current in the CCL.

4.1.3.2 Diagnostic Interfaces with CCL

Diagnostics are incorporated within the intersegment regions to provide beam information according to the table in the requirements section. There are 47 intersegment regions, and most have diagnostic interfaces. The numbers of each type in the CCL region are

Faraday cups (2)
Wire scanners (8)
Beam position monitors (16)
Current monitor (1)

Diagnostics locations in the CCL are in Appendix B

The following figure shows a typical mounting of a BPM in the intersegment region of the CCL.

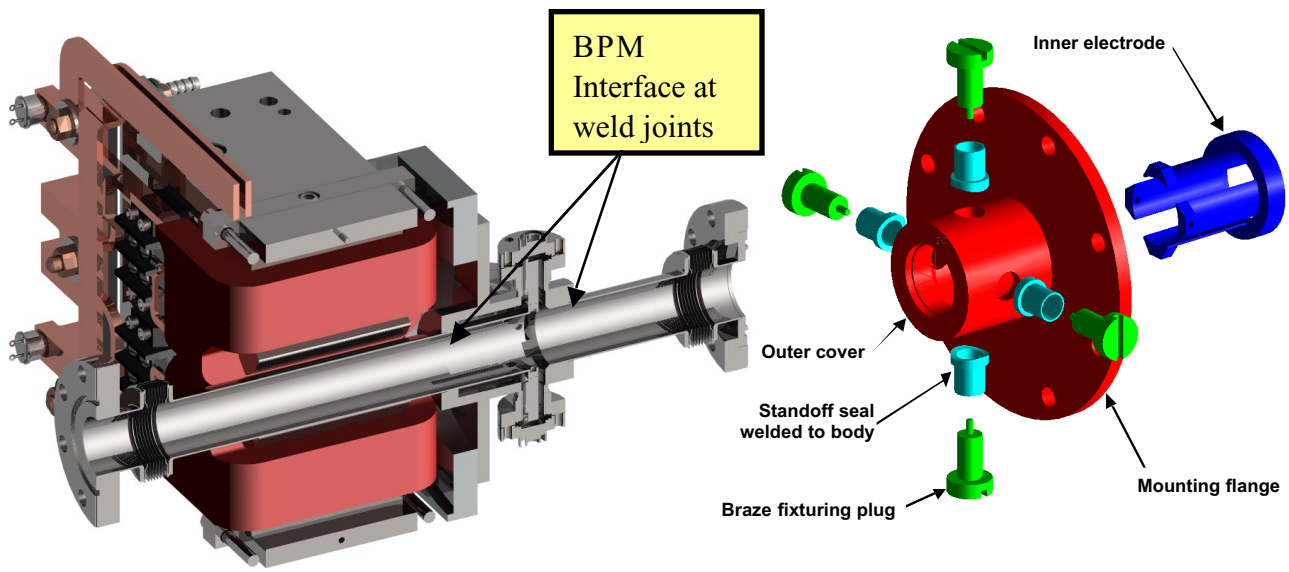

Figure 4-5 Typical intersegment region in CCL showing BPM interface. An exploded view of the BPM is shown on the right.

The following figure shows a typical beam box in the CCL intersegment region with the wire scanner interface point noted.

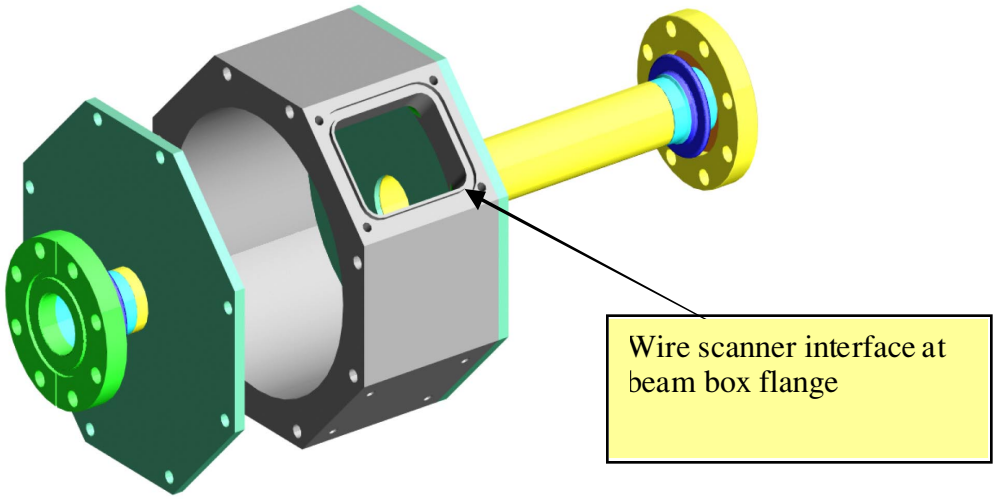

Figure 4-6. Typical wire scanner interface at beam box flange in CCL intersegment region.

The following figure shows the region between the CCL and SRF Linac with diagnostics locations and interfaces noted.

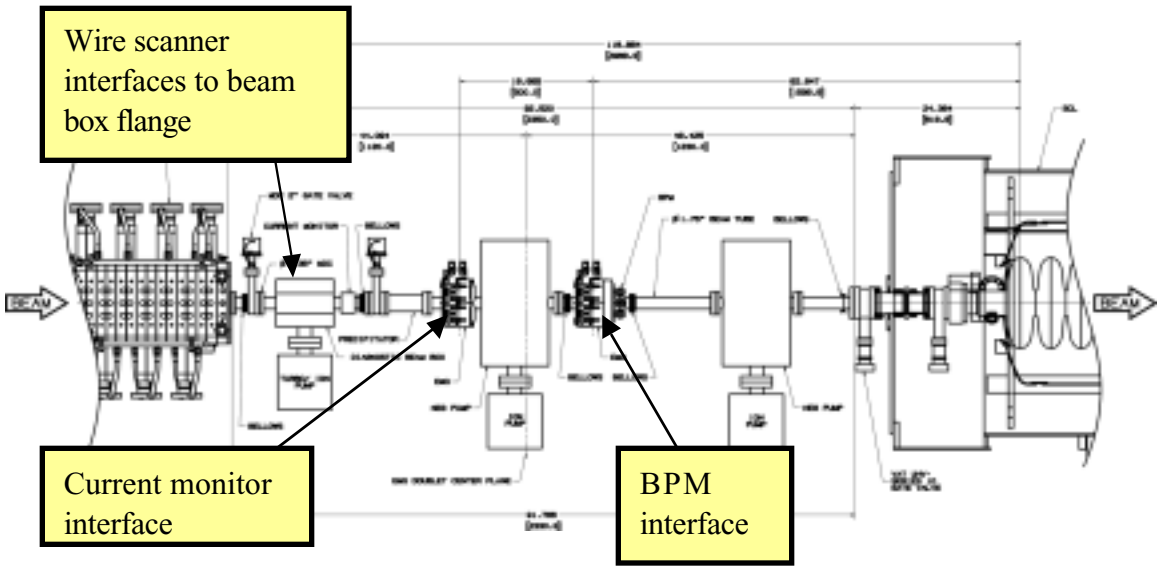

Figure 4-7. Matching region between the CCL and the SCL showing diagnostic interfaces.

4.1.3.3 Physics Interfaces with CCL

The physics parameters for the CCL are given in the requirements section.

4.1.3.4 Commissioning Interfaces with CCL

The commissioning process establishes set points and overall operation of the CCL.

4.1.4 Interfaces with Superconducting-RF Linac (WBS 1.4.9 to 1.4.11)

4.1.4.1 Chopper Interfaces with SRF Linac.

No interfaces have been identified. The chopper acts with the other Front-End systems to limit beam current in the SRF linac.

4.1.4.2 Diagnostic Interfaces with SRF Linac

Diagnostics are incorporated within the warm inter-cryotank regions (WBS 1.4.9) to provide beam information according to the table in the requirements section. Diagnostics locations in the SRF linac are in Appendix B

The following drawing shows the layout of a typical inter-cryomodule region showing the diagnostics interfaces.

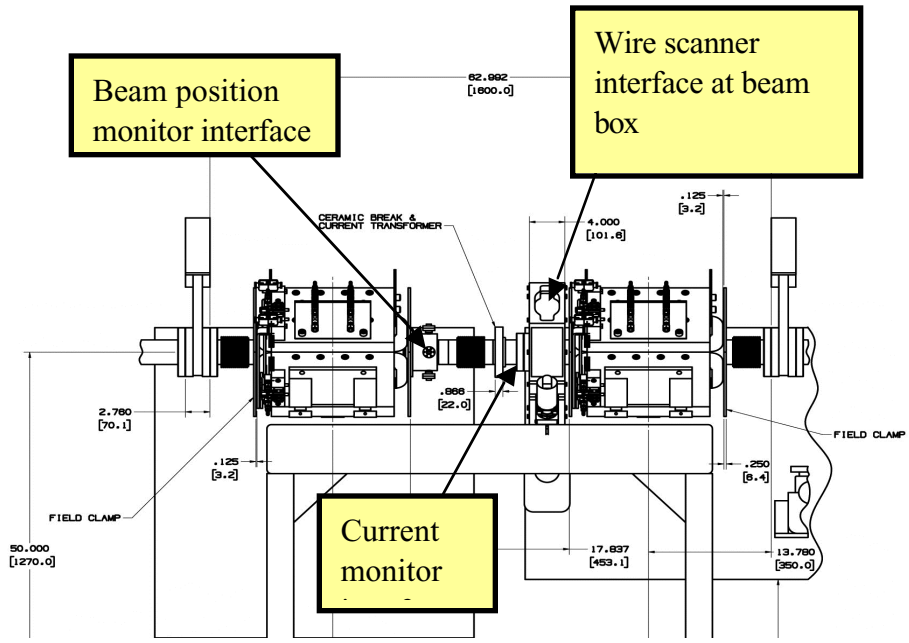

Figure 4-8. Diagnostic interfaces in a typical inter-cryomodule region (WBS 1.4.9) in the SRF linac.

4.1.4.3 Physics Interfaces with SRF Linac.

The physics parameters for the SRF linac are given in the requirements section.

4.1.4.4 Commissioning Interfaces with SRF linac.

The commissioning process establishes set points and overall operation of the SRF linac.

4.2 Interfaces with Front-End Systems (WBS 1.3)

4.2.1 MEBT Chopper (WBS 1.4.5.1) Interfaces to WBS 1.3

The MEBT chopper and antichopper fit within the MEBT at locations specified by Front-End Systems. The following layout shows the chopper location in the MEBT.

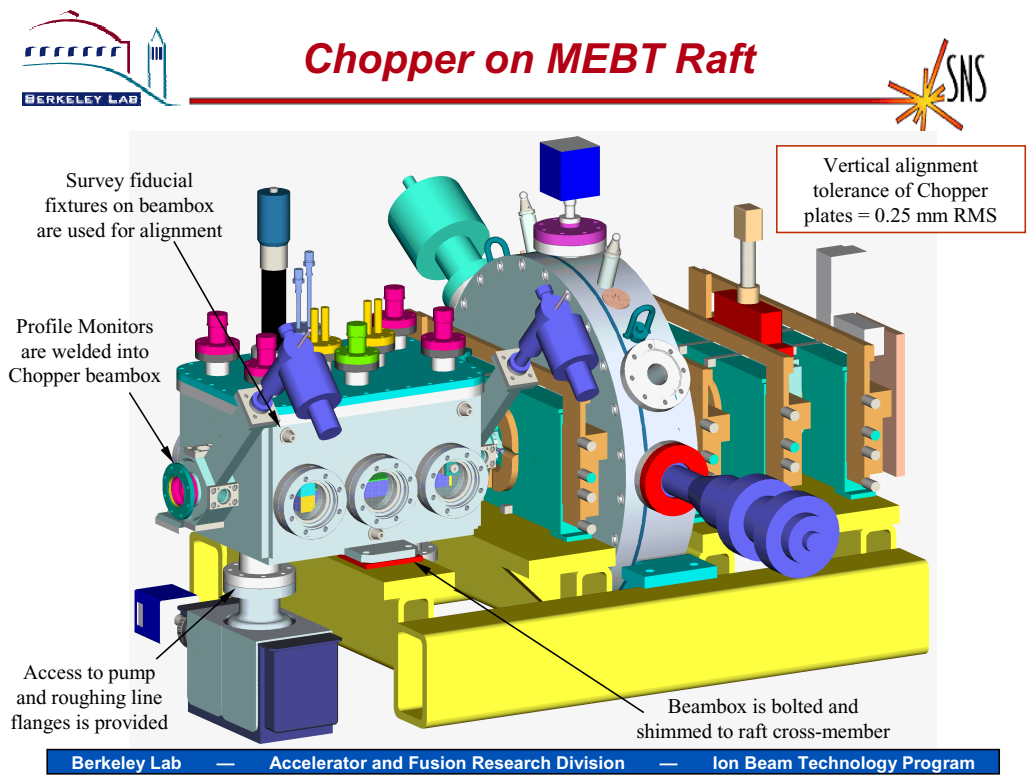

Figure 4-9 Location of chopper in the MEBT.

The following figure is an isometric of the chopper structure (WBS 1.4.5.1) that is being provided by LANL to fit within the chopper boxes supplied by LBNL. The lid to the chopper box is provided by LBNL and the interfaces are indicated on the figure.

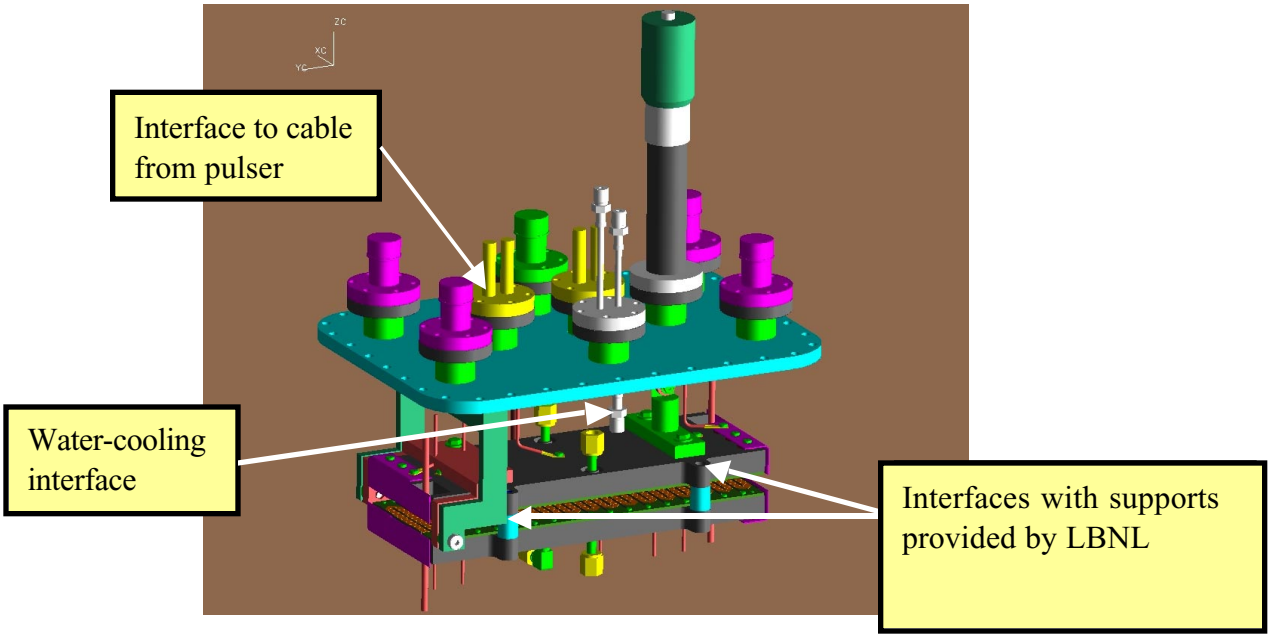

Figure 4-10. Isometric view of the chopper structure fastened to the lid of the chopper box with interfaces defined.

The following figure is a more detailed schematic of the chopper structure as reference for the interfaces described below.

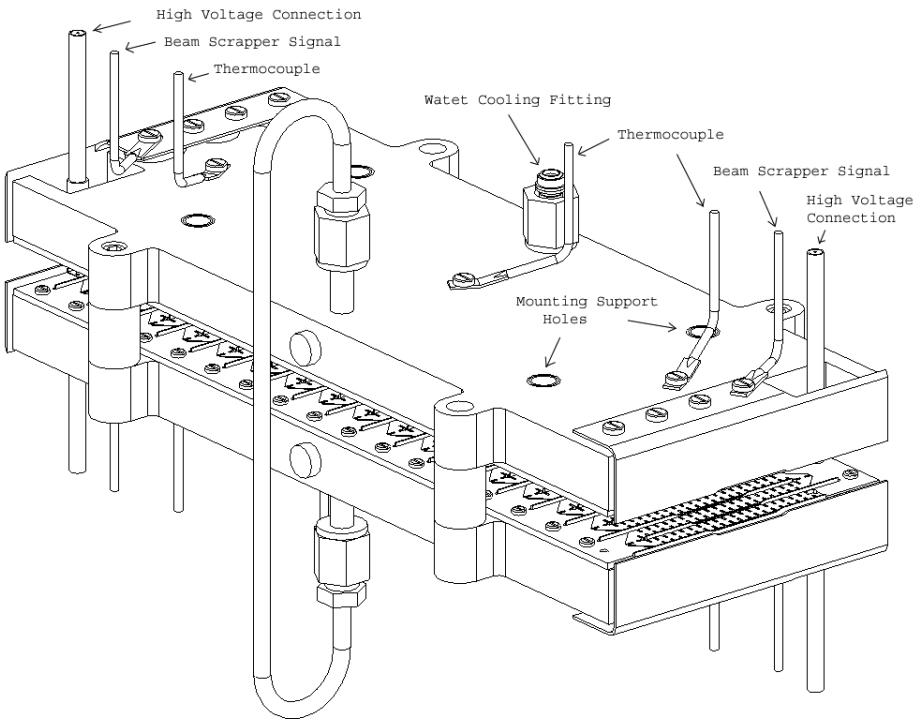

Figure 4-11. Schematic of MEBT chopper structure.

4.2.1.1 High Voltage Connections

Four high voltage connections per assembly are required. LANL will provide 7-16 DIN connector feedthroughs mounted on 2-3/4 Conflat flanges for installation in the LBNL vacuum vessel. LANL will provide the high voltage coaxial cables for use in the vacuum.

4.2.1.2 Scraper Signals

Four scrapers are installed on the assembly. Each of these has a signal wire that must be brought out through the vacuum. LANL will provide the internal wiring and vacuum feedthroughs.

4.2.1.3 Thermocouples

A total of six thermocouples will be mounted on the assembly (3 per side). LANL will provide the thermocouples, internal wiring and vacuum feedthroughs. The type of wire and thermocouple type are to be determined by LANL and agreed upon by LBNL.

4.2.1.4 Water Cooling

The structure assembly requires a minimum of one GPM of water flow through the cooling passages. There are two connections per assembly, both of which are 1/4" Butt Weld Atlas ATVCR 5002

fittings. LBNL is responsible for the piping in the vacuum chamber as well as the feedthroughs. LANL will provide the connection between the two halves under vacuum.

4.2.1.5 Chopper Pulser Interfaces

The specifications in Appendix C apply to the chopper pulsers, and are the specifications provided to the pulser manufacturer. The interface requirements are specified here. LBLN must provide two standard 19 racks for mounting the required four power supplies. LBNL will provide the high voltage output cables that connect the pulsers to the chopper structures.

4.2.1.6 High Power Loads

Four high-power loads are required and will be provided by LANL. Each will require 9-11 GPM of water flow. The physical size is BIRD 8775 or equivalent. The connectors are adapted to 7-16 DIN. LBNL will provide the high voltage cable assemblies for connecting the loads to the chopper structures.

4.2.1.7 Instrumentation

LANL will provide a four-channel HP or Tektronix digital oscilloscope suitable for monitoring the performance of the pulsers. The model and specifications will be determined by LANL. LBNL must provide the rack space, AC power, and all cables required.

4.2.2 Diagnostics (WBS 1.4.5.2) Interfaces to WBS 1.3

LANL is designing & building the BPM position/phase electronics for the MEBT. The interface is at the cable connection in the equipment rack.

LANL is designing the wire scanner electronics for the MEBT. The interface is at the cable connection in the equipment rack.

4.2.3 Physics (WBS 1.4.5.3) Interfaces to WBS 1.3

Front-End Systems provide the beam parameters to Linac Systems for simulation of linac performance. The required parameters are described in the Front-End Systems DCD.

4.2.4 Commissioning (WBS 1.4.5.4) Interfaces to WBS 1.3

Front-End Systems provide the beam for commissioning Linac Systems. The required parameters are described in the requirements section and in the Front-End Systems DCD.

4.3 Interfaces with Ring Systems (WBS 1.5)

4.3.1 Chopper (WBS 1.4.5.1) Interfaces to WBS 1.5

The chopper provides the required gap in beam current for ring extraction as defined in the requirements. The chopper also acts with the other Front-End systems to limit beam current in the HEBT, beam dumps, and ring. There are no physical interfaces.

4.3.2 Diagnostics (WBS 1.4.5.2) Interfaces to WBS 1.5

BNL is building the BLM system for the linac. There are no interfaces since they have the complete responsibility and the system mounts on the tunnel wall and not on the linac structures.

LANL is designing & building the BPM position/phase electronics for the HEBT. The interface is at the cable connection in the equipment rack.

LANL is designing the wire scanner electronics for the HEBT. The interface is at the cable connection in the equipment rack.

LANL is designing the harp pickups & electronics for the HEBT, RTBT, and target. The mechanical interface for the HEBT (linac and injection dumps) and RTBT (extraction dump) is at the flanges provided by BNL in the dump beam lines. The mechanical interface for the target is a mounting plate provided by ORNL in the target window box.

4.3.3 Physics (WBS 1.4.5.3) Interfaces to WBS 1.5

Linac Systems provide the beam parameters to Ring Systems for simulation of linac performance. The required parameters are described in the requirements section.

4.3.4 Commissioning (WBS 1.4.5.4) Interfaces to WBS 1.5

Linac Systems provide the beam for commissioning Ring Systems. The required parameters are described in the requirements section.

4.4 Interfaces with Conventional Facilities (WBS 1.8)

Functional interfaces to Conventional Facilities (WBS 1.8) are identified in the Systems Requirements Document for the Title I Design of the Front End Building, the Linac Tunnel, and the Klystron Building, SNS10830000SR0001.

4.5 Interfaces with Control System (WBS 1.9)

4.5.1 Chopper (WBS 1.4.5.1) Interfaces to WBS 1.9

The chopper provides output signals and receives control signals from the control system. The anticipated signals are summarized in the following table and in Appendix A (Technical Specifications for Chopper Pulser).

Table 4-2. Control channel estimate for MEBT Chopper

System	Number of systems	Channels per system (read/write)	Estimated channels (read/write)	Total channels
Structure				
Pulser				

The interface point for these signals is at the front connector of the required module in the VXI crate. Both the crate and modules are supplied by WBS 1.9.

4.5.2 Diagnostics (WBS 1.4.5.2) Interfaces to WBS 1.9

The following table contains the channel count for diagnostics. The defined interface is the back of a VXI crate.

Table 4-2. Control channel estimate for Diagnostics

System	Number of systems	Channels per system (read/write)	Estimated channels (read/write)	Total channels
BPM				
CM				
Wire Scanner				
Harp				

Video Profile				
Phase Width				
Beam-in-Gap				
D-Plate				

4.5.3 Physics (WBS 1.4.5.3) Interfaces to WBS 1.9

Linac Systems provide the physics code and algorithms for calculating and displaying beam parameters. The required parameters are TBD.

4.3.4 Commissioning (WBS 1.4.5.4) Interfaces to WBS 1.9

Linac Systems provide the control requirements for commissioning to Controls Systems. The required parameters are TBD.

5.0 QUALITY ASSURANCE

5.1 General

All activities associated with the MEBT Chopper and Diagnostics Systems will be conducted in accordance with the requirements contained in SNS-QA-P01, SNS QA Plan; and accepted engineering standards and practices. Good engineering practices within the established design process will ensure future safe and reliable operation of the SNS, and mitigate conditions that could pose a threat to success. In all cases, consensus standards will be used to accomplish design activities. Where existing standards do not adequately control an activity, appropriate administrative controls will be considered.

Thoughtfully derived and properly graded controls for design, manufacture, installation, testing, and operation of the remote handling systems will be established prior to execution of each of these activities. Additional controls will only be proposed in cases where they enhance success.

Successful QA program performance will be verified through validation activities such as design reviews, surveillance activities, inspections, tests, and readiness reviews.

5. 2 Tests

5.2.1 Engineering Tests

Tests of the MEBT Chopper and Diagnostics Systems used primarily for the purpose of acquiring data to support the design and development shall be specified in the individual development and product specifications.

5.2.1 Reliability Testing

Reliability evaluation/development tests shall be conducted on items with limited reliability history that will have a significant impact upon the operational availability of the system. Individual development and product specifications shall establish reliability test requirements.

5.3 Quality Conformance Inspections

Physics and diagnostics design and performance requirements identified in this specification and referenced specifications shall be verified by inspection, analysis, demonstration, similarity, test, or a combination of these.

5.3.1 Certifications

A copy of inspection and test records and certifications relating to the requirements associated with all purchased equipment shall be prepared.

6.0 SAFETY REQUIREMENTS

The MEBT Chopper and Diagnostics Systems shall meet all applicable Department of Energy and other Federal safety regulations, plus those applicable State, Local, and SNS safety requirements, and the SNS Environment, Safety, and Health (ES&H) Plan. A hazard analysis shall be conducted in conjunction with the design of the commissioning sequence. Particular emphasis shall be placed on restricting the use of hazardous materials where possible, grounding of electrical systems, and minimizing radiation exposure of individuals.

In addition, Los Alamos personnel will conduct all work following the appropriate LIR (Laboratory Implementation Requirement). LIR 300-00-01.1, Safe Work Practices, is a root document that all must adhere to. In the LIR the statement is made that Safe Work Practices are an essential part of Integrated Safety Management (ISM). LA-UR-98-2837, rev. 3.1.

Also, the Safety section in the SNS Quality Assurance Plan addresses the safety issues that should be complied with during design activities using the graded approach matrix.

7.0 DOCUMENTATION

Technical documentation shall be delivered, sufficient in level of detail, type and quality to allow re-procurement and satisfy the SNS documentation standards and practices. Electronic, PDF files shall be provided. The technical documentation package shall include the following.

7.1 Specifications

The following specifications shall be developed:

7.2 Engineering Drawings and Associated Lists

Drawings and associated lists shall be provided. SNS Drawing Numbering System, and Global Drafting Manual, supplemented by procedures and instructions pertinent to SNS only, shall be used as guides.

7.3 Technical Manuals and Procedures

7.3.1 Procedures

Procedures shall be provided for, at minimum,
a) Initial installation and set-up of equipment

b) Normal operation of equipment
c) Normal and/or preventative maintenance
d) A troubleshooting guide for any anticipated potential malfunctions

7.3.2 Manuals

Manuals shall be provided for, at minimum, all purchased components and subsystems delivered to SNS.

7.3.3 Documentation Numbering

The SNS document numbering procedure shall be followed.

7.3.4 Test Plans and Procedures

Test plans and procedures shall be developed.

8.0 OPERATIONS AND MAINTENANCE REQUIREMENTS

8.1 Operating Modes

See requirements section.

8.2 Surveillance and in-service inspection requirements

No design requirements have been identified.

8.3 General Maintenance

No design requirements have been identified.

8.4 Abnormal Events and Recovery Procedures

The MEBT Chopper and Diagnostic Systems shall be able to tolerate thermal transients associated with beam trips and component failures.

9.0 INSTALLATION REQUIREMENTS

Installation of equipment shall be conducted jointly by LANL and ORNL personnel as described in the document Linac Transfer Procedure, when it is finalized and approved (draft of 12/14/00). This will incorporate the Lead-Mentor-Consult approach for first and subsequent numbers of the same type of equipment.

An example, using the diagnostic systems baseline quantities, is shown in the table below. For the chopper system, the devices will be delivered to LBNL for installation by their staff with Los Alamos in a mentor and consulting role, both at Berkeley and later when the Front-End System is installed at ORNL. Installation in not applicable for physics and commissioning.

Table 9-1. Lead-Mentor-Consult approach for diagnostic systems.

Diagnostics **Installation** 1/23/01

		LANL (Lead-Mentor-Consult) =	L	M	C	L	M	C	L	M	C	L	M	C	L	M	C	L	M	C	L	M	C
Installation		**Installation**	**Total**																				
WBS	**Name**	**Budget**	(Note 1)			**D-Plate**			**DTL**			**CCL**			**SCL**			**Phantom**			**HEBT**		
1.4.5.2.1.3	BPM Electronics	$ 229,640	76			2			12			16			30						16		
			10	8	58	2			2	2	8	2	2	12	2	2	26				2	2	12
1.4.5.2.1.6	BPM Pickups	$ 336,652	62			2			12			16			30						2		
			20	4	38	2			12			2	2	12	2	2	26				2		
1.4.5.2.2.3	Phase Width	$ 17,910	1																		1		
			1	0	0																1		
1.4.5.2.3.3	Current Monitor Pickups	$ 6,754	12			1			6			2			3								
			9	2	1	1			6			1	1		1	1	1						
1.4.5.2.4.3	Wire Scanner Electronics	$ 123,656	44			1			6			8			29								
			4	3	37	1			1	1	4	1	1	6	1	1	27						
1.4.5.2.4.6	Wire Scanner Pickups	$ 242,669	44			1			6			8			29								
			4	3	37	1			1	1	4	1	1	6	1	1	27						
1.4.5.2.5.3	Harp Electronics	$ 45,854	7			1			2												4		
			3	2	2	1			1	1											1	1	2
1.4.5.2.5.6	Harp Pickups	$ 43,486	7			1			2												4		
			3	2	2	1			1	1											1	1	2
1.4.5.2.6.3	Video Profile	$ 4,965	1			1																	
			1	0	0	1																	
1.4.5.2.7.3	Beam-in-Gap	$ 46,057	1																		1		
			1	0	0																1		
1.4.5.2.8.3	Diagnostic Plate	$ 36,100	1			1																	
			1	0	0	1																	
		$ 1,133,743	256			11			46			50			121			0			28		
			57	24	175	11	0	0	24	6	16	7	7	36	7	7	107	0	0	0	8	4	16
		Per-cent	22	9	68	100	0	0	52	13	35	14	14	72	6	6	88				29	14	57
	Labor Only	$ 1,019,426																					

Notes:

(1) All quantities are from baseline estimate -- the final quantities and locations will be adjusted by PCR when they are finali

Lead-Mentor-Consult.xls 1

10.0 ACCEPTANCE TESTING REQUIREMENTS

TBD

11.0 COMMISSIONING REQUIREMENTS

Commissioning requirements and procedures are contained in section 3.5. Commissioning of diagnostics will take place during commissioning of each of the associated subsystems. Commissioning for the MEBT chopper is discussed in the Front-End Systems DCD and associated test plan.

12.0 CODES AND STANDARDS

The MEBT Chopper and Diagnostics Systems shall be designed in accordance with the codes and standards of record as evoked by the Systems Requirements Document for the SNS Linear Accelerator and the following:

12.1 SNS Documents

SNS Environment, Safety, and Health (ES&H) Plan, (Reference Doc No: 102030000ES0001R00, 12-1-99)

SNS-QA-P01, SNS QA Plan; Quality Assurance Plan for the Target System of the Spallation Neutron Source Project, Title I (Preliminary Engineering Design).

SNS Systems Requirements Document for Equipment, Device and Signal Naming," SNS 102000000 SR0001-R00

System Requirements Document for Title I Design of the Front-end Building, the Linac Tunnel and the Klystron Building, SNS 108030000SR000

12.2 Non-SNS Documents

American Welding Society AWS D-1.1Structural Welding Code - Steel

American Society of Mechanical Engineers, ASME NOG-1
490 Specification Practices

Global Drafting Standard

ASME Boiler and Pressure Vessel Code. Section VIII

ANSI C95.1-1982 American National Safety Standard Levels with respect to Human Exposure to Radio Frequency Electromagnetic Fields (300 kHz-100GHz)

ASTM B 571 Standard Test Methods for Adhesion of Metallic Coating

13.0 ATTACHMENTS

Appendix A — Specifications for MEBT chopper pulser

Appendix B — Specifications for MEBT chopper loads and cables.

Appendix C — Diagnostics Locations in Linac

Appendix D — RF-Power Requirements

Appendix E — Cell-Geometry Tables for DTL (SUPERFISH)

Appendix F — Cell-Geometry Tables for CCL (SUPERFISH)

Appendix G — Cell Parameters (PARMILA)