REVISIONS						
ZONE	REV	DESCRIPTION	CHANGED BY	DATE	CLASS REVIEW	APPROVED
---	A	ORIGINAL ISSUE	-------	--------	NR	---

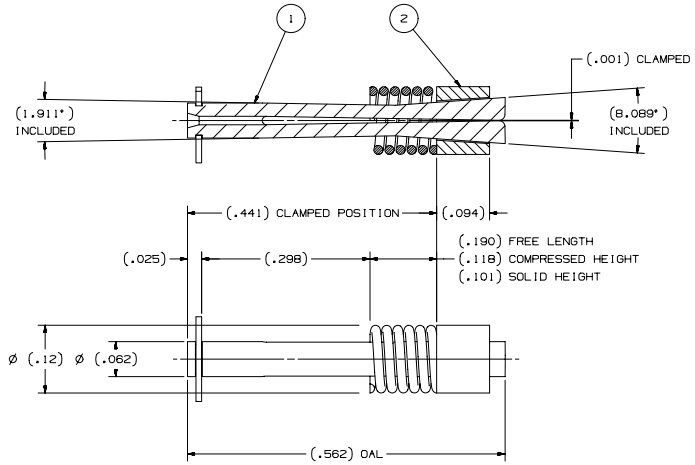

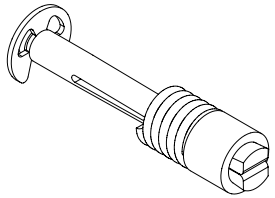

ISOMETRIC VIEW
(CLAMPED POSITION)
SCALE: NONE

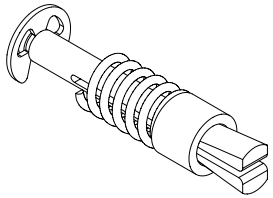

ISOMETRIC VIEW
(FREE-STATE)
SCALE: NONE

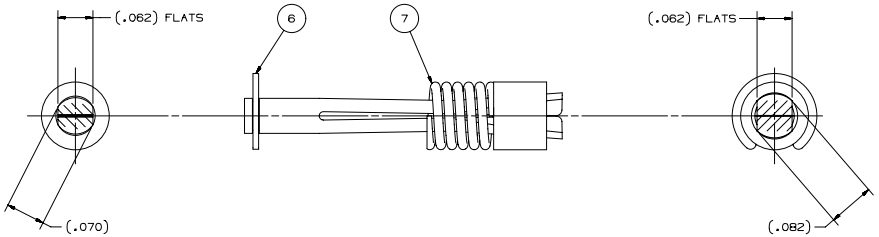

QTY REQD	PART OR IDENTIFYING NO.	NOMENCLATURE OR DESCRIPTION	MATERIAL SPECIFICATION	ITEM NO
1	C0120-016-0190	STAINLESS STEEL COMPRESSION SPRING	ASSOCIATED SPRING	7
1	X-5133-6	EXTERNAL E-RING	WALDES TRUARC	6
				5
				4
				3
1	155Y520825	CLAMP COLLAR		2
1	155Y520824	CLAMP COLLET		1
--	155Y520823	CLAMP COLLET ASSEMBLY		--

PARTS LIST/BILL OF MATERIAL

DRAWING LEVEL: PRODUCTION

UNCLASSIFIED

TASK CONTRACTOR

CAD SYSTEM & VER.: UNIGRAPHICS V18.0/IMAN

SEE FINAL DESIGN AUTHORIZATION SHEET FOR SIGNATURES; SHEET IS FILED BY DRAWING NUMBER AT THE SNS PROJECT OFFICE.

UNLESS OTHERWISE SPECIFIED: DIMENSIONS ARE IN INCHES. TOLERANCES ARE:
DECIMALS .X= ±.1 .XX= ±.01 .XXX= ±.005
ANGULAR: ±.25° MACHINED: 125 FINISH

APPROVALS		DATE	GROUP
DESIGNED	D. SATTLER	12-13-01	SNS-3
DRAWN	D. SATTLER	12-13-01	SNS-3
CHECKED	R.MEYER	07-17-02	SNS-3
ENGINEERING	R. MEYER	07-19-02	SNS-3
VACUUM	B. GILLES	07-19-02	LANCE-2
PHYSICS	M. PLUM	07-19-02	SNS-3
APPROVED	N. BULTMAN	07-19-02	SNS-3

Los Alamos National Laboratory
Los Alamos, New Mexico 87545
Los Alamos SNS DIVISION

PROJECT: SNS

SNS DIAGNOSTICS
WIRE SCANNER
CLAMP COLLET ASSEMBLY

SIZE	CAGE CODE	DWG NO. & CAD FILENAME	REV
D	88516	155Y520823	-A

SCALE 10/1 — DO NOT SCALE — SHEET 1 OF 1

NEXT ASSEMBLY USED ON (CONTINUED)	
155Y520834	155Y520835
155Y520832	155Y520833
155Y520830	155Y520831
APPLICATION	

NEXT ASSEMBLY USED ON	
155Y520828	155Y520829
155Y520826	155Y520827
APPLICATION	

SNS DWG No. 104050000-I8D-8200-A823-R00

NOTES: UNLESS OTHERWISE SPECIFIED

101 ABBREVIATIONS PER ASME Y14.38-1999.

102 THOROUGHLY CLEAN PARTS TO REMOVE ALL OIL, GREASE, DIRT, CHIPS, ETC.

201 DIMENSIONING AND TOLERANCING PER ASME Y14.5M-1994.

401 BAG AND TAG PART WITH DRAWING NUMBER & REVISION LETTER.