REVISIONS						
ZONE	REV	DESCRIPTION	CHANGED BY	DATE	CLASS REVIEW	APPROVED
---	A	ORIGINAL ISSUE	-------	--------	NR	---
---	--	----------	-------	--------	NR	---

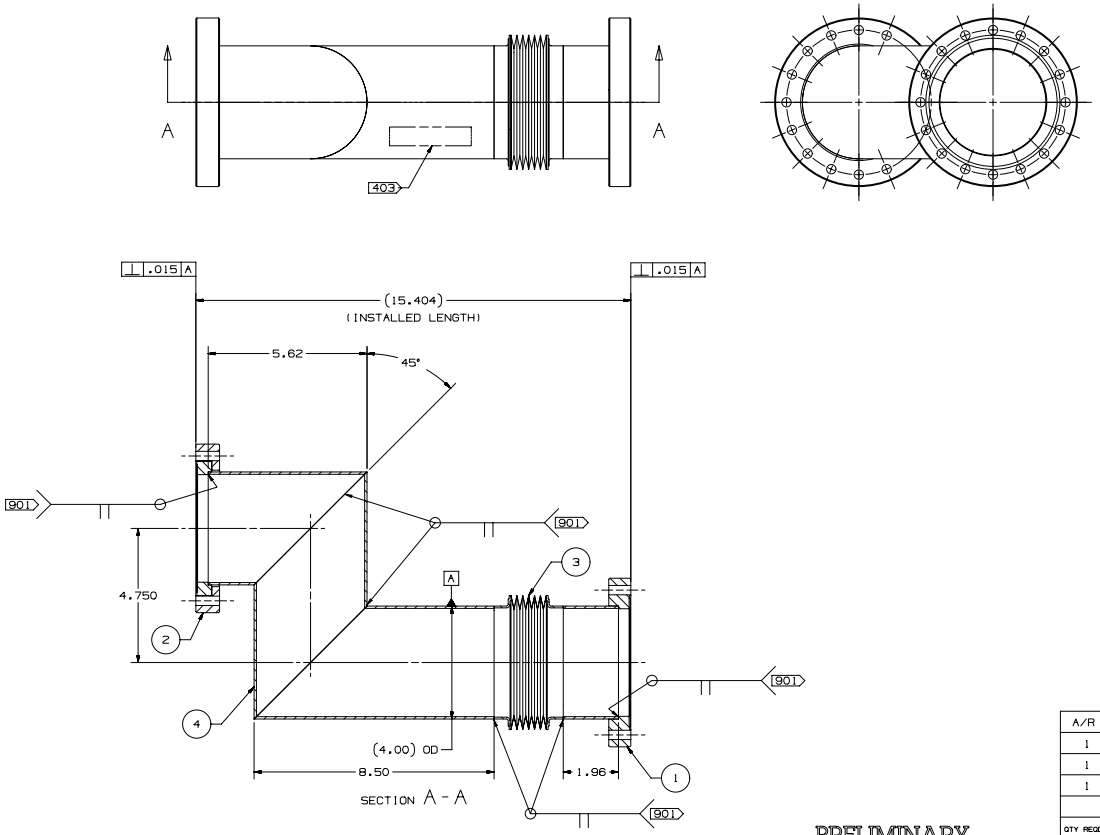

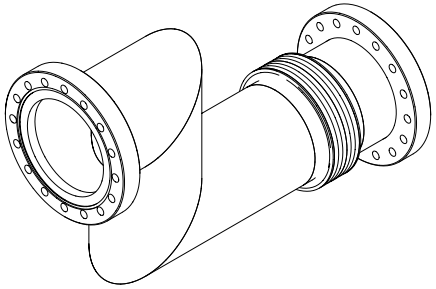

ISOMETRIC
SCALE: NONE

NOTES: UNLESS OTHERWISE SPECIFIED

101 ABBREVIATIONS PER ASME Y14.38-1999.
102 THOROUGHLY CLEAN PARTS TO REMOVE ALL OIL, GREASE, DIRT, CHIPS, ETC.
201 DIMENSIONING AND TOLERANCING PER ASME Y14.5M-1994.
301 WELDING & BRAZING SYMBOLS PER AWS A2.4-1998.
302 REMOVE BURRS AND SHARP EDGES.
321 WELD IN ACCORDANCE WITH AWS D1.6-1999.
403 ENGRAVE DRAWING NUMBER & REVISION LETTER, APPROXIMATELY WHERE SHOWN, IN .25" HIGH CHARACTERS.
901 FINAL ASSEMBLY SHALL BE LEAK TIGHT. LEAK RATE TO BE ESTABLISHED WITH A MASS SPECTROMETER TYPE LEAK DETECTOR. THE INSTRUMENT USED SHALL BE IDENTIFIED. CALIBRATION DATA SUPPLIED SHOULD INCLUDE "SENSITIVITY", AND "STANDARD LEAK SIZE." NO DETECTABLE LEAK USING A MSLD HAVING A SENSITIVITY OF 2 X 10^{-10} ATM cc/sec (HELIUM). CALIBRATION DATA INCLUDING SENS AND STD LEAK SIZE WILL BE INCLUDED.

PRELIMINARY
FOR INFORMATION OR REVIEW ONLY. DO NOT USE FOR PROCUREMENT OR FABRICATION. DRAWING CONTENT SUBJECT TO FUTURE CHANGE.

DATE

QTY REQD	PART OR IDENTIFYING NO.	NOMENCLATURE OR DESCRIPTION	MATERIAL SPECIFICATION	ITEM NO
A/R		TUBE, Ø 4.00 X .083 WALL	SST	4
1	475-375-2-EE	STANDARD BELLOWS COMPANY	SST	3
1	MDC #100026	ROTATABLE FLANGE, Ø 6.00 OD	SST	2
1	MDC #110026	NONROTATABLE FLANGE, Ø 6.00 OD	SST	1
	155Y521822	SPOOL ASSY-VACUUM-Z-4		

PARTS LIST/BILL OF MATERIAL

DRAWING LEVEL: PRODUCTION

UNCLASSIFIED

TASK CONTRACTOR

CAD SYSTEM & VER.: UG V16.0.4

SEE FINAL DESIGN AUTHORIZATION SHEET FOR SIGNATURES; SHEET IS FILED BY DRAWING NUMBER AT THE SNS PROJECT OFFICE.

UNLESS OTHERWISE SPECIFIED: DIMENSIONS ARE IN INCHES. TOLERANCES ARE:
DECIMALS .X= ±.1 .XX= ±.01 .XXX= ±.005
ANGULAR= ±.25° MACHINED: 125 FINISH

APPROVALS		DATE	GROUP
DESIGNED	D. IRELAND	9/4/01	SNS-3
DRAWN	A. ROMERO	9/4/01	SNS-3
CHECKED	----------	--------	------
ENGINEERING	----------	--------	------
VACUUM	----------	--------	------
PHYSICS	----------	--------	------
APPROVED	----------	--------	------

NEXT ASSEMBLY USED ON
APPLICATION

SNS DWG No. 104050000-I8D-8200-B822-R00

Los Alamos National Laboratory
Los Alamos, New Mexico 87545
SNS DIVISION

PROJECT: SNS

DIAGNOSTICS PLATE
BEAMLINE
SPOOL ASSY-VACUUM-Z-4

SIZE	CAGE CODE	DWG NO. & CAD FILENAME	REV
D	88516	155Y521822	-A

SCALE 1/2 DO NOT SCALE SHEET 1 OF 1