| REVISIONS | | | | | | |
|---|---|---|---|---|---|---|
| ZONE | REV | DESCRIPTION | CHANGED BY | DATE | CLASS REVIEW | APPROVED |
| --- | A | ORIGINAL ISSUE | ------- | -------- | NR | --- |
| --- | -- | ---------- | ------- | -------- | NR | --- |

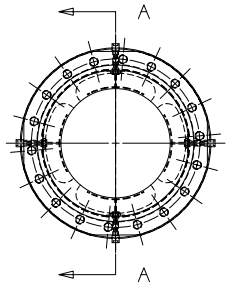


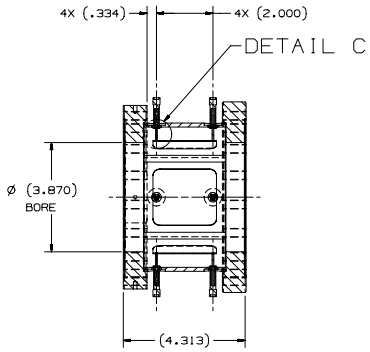


SECTION A - A

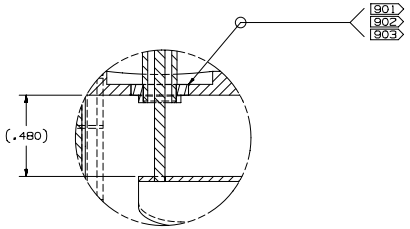


DETAIL C
SCALE: NONE

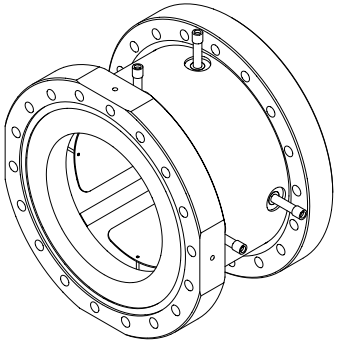

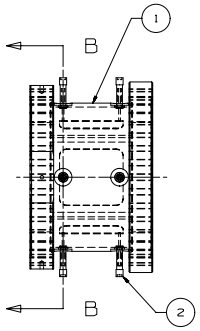


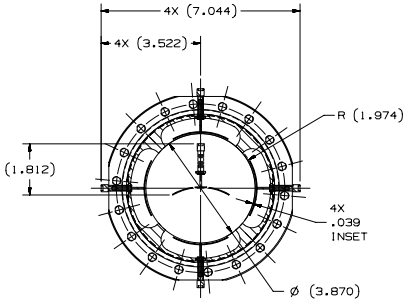


SECTION B - B

NOTES: UNLESS OTHERWISE SPECIFIED

101 ABBREVIATIONS PER ASME Y14.38-1999.
102 THOROUGHLY CLEAN PARTS TO REMOVE ALL OIL, GREASE, DIRT, CHIPS, ETC.
202 SURFACE TEXTURE SYMBOLS PER ASME Y14.36M-1996.
208 REMOVE BURRS AND SHARP EDGES TO .010 MAX.
301 WELDING & BRAZING SYMBOLS PER AWS A2.4-1998.
321 WELD IN ACCORDANCE WITH AWS D1.6-1999.
403 ENGRAVE DRAWING NUMBER & REVISION LETTER, APPROXIMATELY WHERE SHOWN, IN .25" HIGH CHARACTERS.
901 WELD JOINT TO BE VENDOR OPTION WITH LANL APPROVAL.
902 DO NOT OVER HEAT, EXCESSIVE HEAT WILL DAMAGE FEEDTHRU.
903 FINAL ASSEMBLY SHALL BE LEAK TIGHT. LEAK RATE TO BE ESTABLISHED WITH A MASS SPECTROMETER TYPE LEAK DETECTOR. THE INSTRUMENT USED SHALL BE IDENTIFIED. CALIBRATION DATA SUPPLIED SHOULD INCLUDE "SENSITIVITY", AND "STANDARD LEAK SIZE." NO DETECTABLE LEAK USING A MSLD HAVING A SENSITIVITY OF 2 X $10^{-8}$ ATM cc/sec (HELIUM). CALIBRATION DATA INCLUDING SENS AND STD LEAK SIZE WILL BE INCLUDED.

**PRELIMINARY**
FOR INFORMATION OR REVIEW ONLY. DO NOT USE FOR PROCUREMENT OR FABRICATION. DRAWING CONTENT SUBJECT TO FUTURE CHANGE.

DATE

SNS DWG No.
10405000-I8D-8200-B195-R00

| QTY REQD | PART OR IDENTIFYING NO. | NOMENCLATURE OR DESCRIPTION | MATERIAL SPECIFICATION | ITEM NO |
|---|---|---|---|---|
| 4 | 155Y520200 | ELECTRODE SUB-ASSEMBLY | | 2 |
| 1 | 155Y520196 | HOUSING SUB-ASSEMBLY | | 1 |
| | 155Y520195 | BPM ASSEMBLY | | |

PARTS LIST/BILL OF MATERIAL

DRAWING LEVEL: PRODUCTION

TASK CONTRACTOR

UNCLASSIFIED

CAD SYSTEM & VER.: UG V16.0.4

SEE FINAL DESIGN AUTHORIZATION SHEET FOR SIGNATURES; SHEET IS FILED BY DRAWING NUMBER AT THE SNS PROJECT OFFICE.

UNLESS OTHERWISE SPECIFIED: DIMENSIONS ARE IN INCHES. TOLERANCES ARE:
DECIMALS .X= ±.1 .XX= ±.01 .XXX= ±.005
ANGULAR= ±.25°
MACHINED: 125 FINISH

| APPROVALS | | DATE | GROUP |
|---|---|---|---|
| DESIGNED | D. IRELAND | 10/01/01 | SNS-3 |
| DRAWN | A. ROMERO | 10/01/01 | SNS-3 |
| CHECKED | ---------- | -------- | ------ |
| ENGINEERING | ---------- | -------- | ------ |
| VACUUM | ---------- | -------- | ------ |
| PHYSICS | ---------- | -------- | ------ |
| APPROVED | ---------- | -------- | ------ |

NEXT ASSEMBLY USED ON
APPLICATION

Los Alamos National Laboratory
Los Alamos, New Mexico 87545
Los Alamos SNS DIVISION

PROJECT: SNS

DIAGNOSTICS
BPM
ASSEMBLY

| SIZE | CAGE CODE | DWG NO. & CAD FILENAME | REV |
|---|---|---|---|
| D | 88516 | 155Y520195 | -A |

SCALE 1/2 — DO NOT SCALE — SHEET 1 OF 1