REVISIONS						
ZONE	REV	DESCRIPTION	CHANGED BY	DATE	CLASS REVIEW	APPROVED
---	A	ORIGINAL ISSUE	-------	--------	NR	---
---	--	----------	-------	--------	NR	---

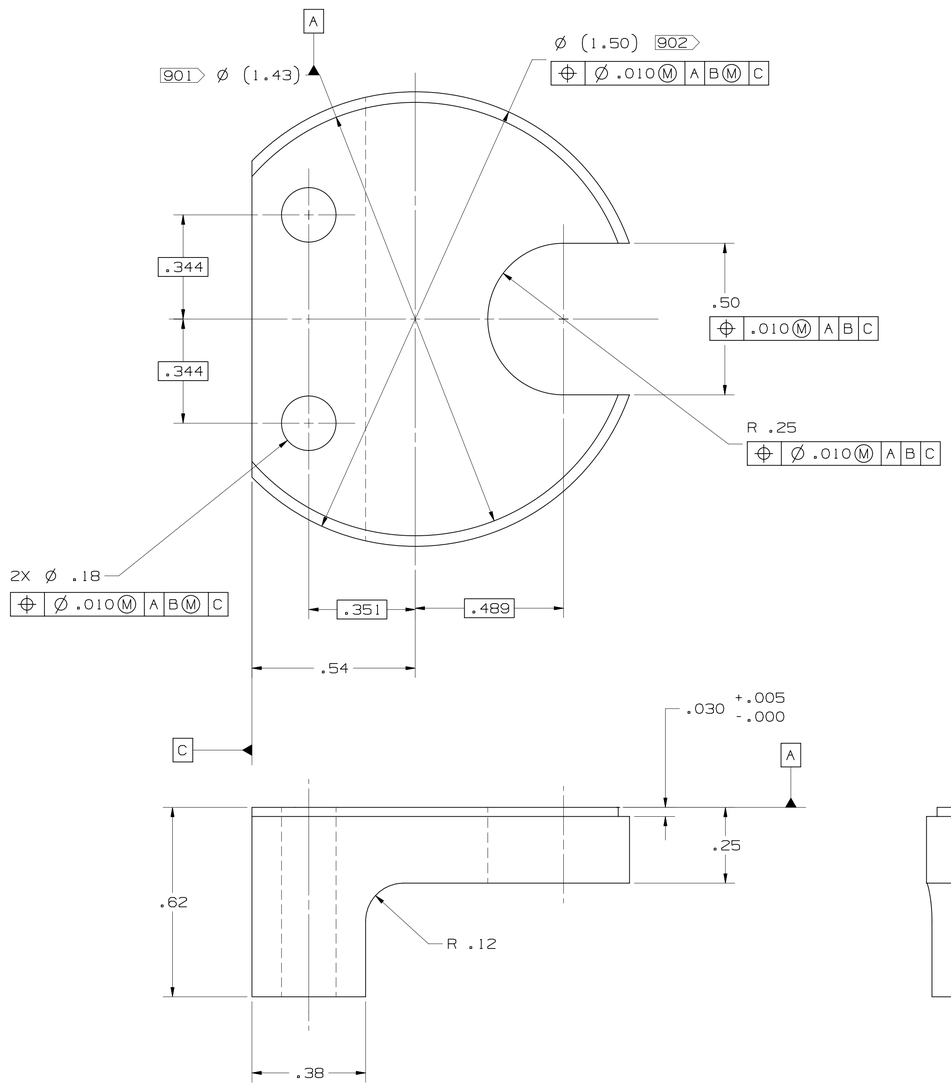

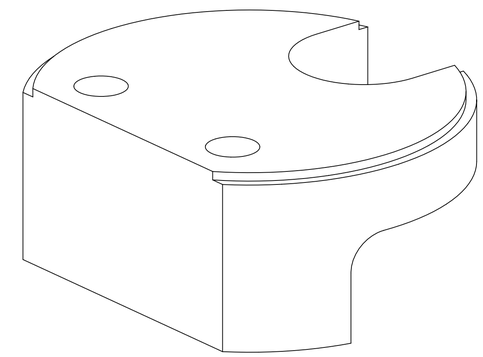

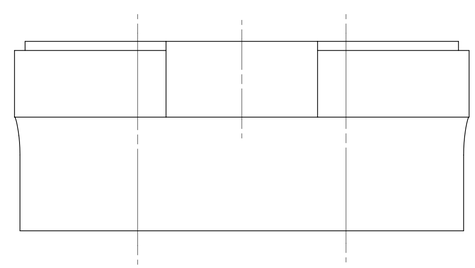

NOTES: UNLESS OTHERWISE SPECIFIED

101 ABBREVIATIONS PER ASME Y14.38-1999.
102 THOROUGHLY CLEAN PARTS TO REMOVE ALL OIL, GREASE, DIRT, CHIPS, ETC.
201 DIMENSIONING AND TOLERANCING PER ASME Y14.5M-1994.
203 SURFACE TEXTURE PER ASME B46.1-1995.
204 ALL INSIDE CORNERS TO BE R.010 MAX.
206 C'SINK ALL TAPPED HOLES 100°, TO MAJOR DIA.
208 REMOVE BURRS AND SHARP EDGES TO .010 MAX.
401 BAG AND TAG PART WITH DRAWING NUMBER & REVISION LETTER.
901 MACHINE FEATURE TO ACHIEVE A DIAMETRICAL CLEARANCE OF .005 INCH MAX. WITH INSIDE DIAMETER OF TUBE ON DRAWING 155Y521899.
902 MACHINE FEATURE TO MATCH OUTER DIAMETER OF TUBE ON DRAWING 155Y521899.

PRELIMINARY
FOR INFORMATION OR REVIEW ONLY. DO NOT USE FOR PROCUREMENT OR FABRICATION. DRAWING CONTENT SUBJECT TO FUTURE CHANGE.
DATE 3-5-2002

SNS DWG No. 104050000-I8E-8200-B900-R00

QTY REQD	PART OR IDENTIFYING NO.	NOMENCLATURE OR DESCRIPTION	MATERIAL SPECIFICATION	ITEM NO
		ROUND ROD	304L STAINLESS STEEL	

PARTS LIST/BILL OF MATERIAL

DRAWING LEVEL: PRODUCTION

UNCLASSIFIED

TASK CONTRACTOR

CAD SYSTEM & VER.: UG V16.0.4

SEE FINAL DESIGN AUTHORIZATION SHEET FOR SIGNATURES. SHEET IS FILED BY DRAWING NUMBER AT THE SNS PROJECT OFFICE.

UNLESS OTHERWISE SPECIFIED: DIMENSIONS ARE IN INCHES.
TOLERANCES ARE:
DECIMALS .X: ±.1 .XX: ±.01 .XXX: ±.005
ANGULAR: ±.25°
MACHINED FINISH: 125

	APPROVALS	DATE	GROUP
DESIGNED	M. CATANACH	2-4-02	SNS-3
DRAWN	H. SALAZAR	2-4-02	SNS-3
CHECKED	----------	-------	------
ENGINEERING	S. ELLIS	2-4-02	SNS-3
VACUUM	----------	-------	------
PHYSICS	----------	-------	------
APPROVED	----------	-------	------

155Y521897 ----------
NEXT ASSEMBLY USED ON
APPLICATION

Los Alamos National Laboratory
Los Alamos, New Mexico 87545
SNS DIVISION

PROJECT: SNS

DTL
FARADAY CUP/DEGRADER
LOWER TUBE BRACKET DETAIL

SIZE	CAGE CODE	DWG NO. & CAD FILENAME	REV
D	88516	155Y521900	-A

SCALE 4/1 DO NOT SCALE SHEET 1 OF 1