REVISIONS						
ZONE	REV	DESCRIPTION	CHANGED BY	DATE	CLASS REVIEW	APPROVED
---	A	ORIGINAL ISSUE	-------	--------	NR	---
---	--	----------	-------	--------	NR	---

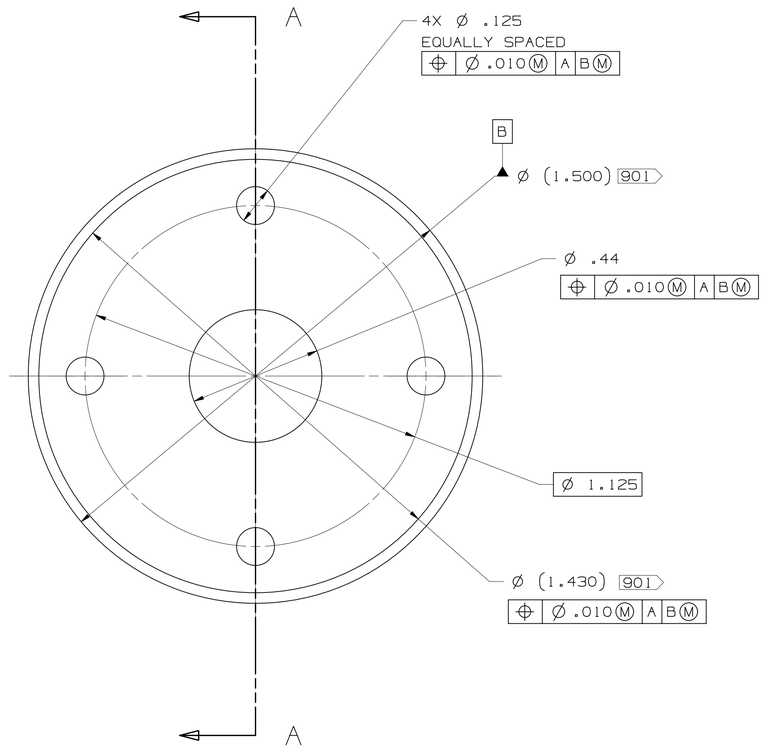

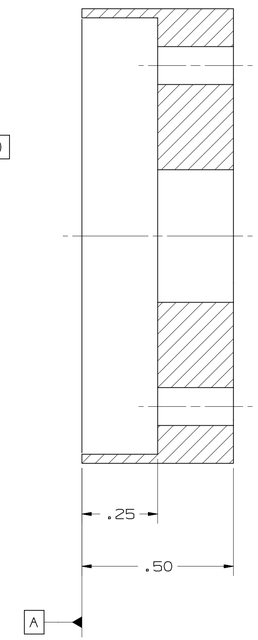

SECTION A - A

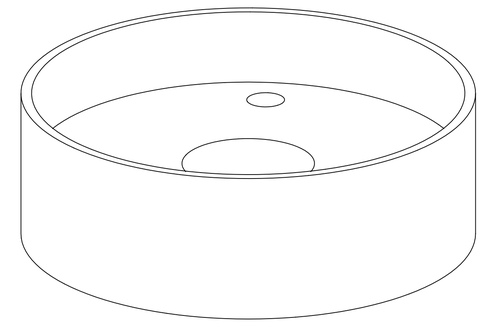

NOTES: UNLESS OTHERWISE SPECIFIED

101 ABBREVIATIONS PER ASME Y14.38-1999.
102 THOROUGHLY CLEAN PARTS TO REMOVE ALL OIL, GREASE, DIRT, CHIPS, ETC.
201 DIMENSIONING AND TOLERANCING PER ASME Y14.5M-1994.
203 SURFACE TEXTURE PER ASME B46.1-1995.
204 ALL INSIDE CORNERS TO BE R.010 MAX.
206 C'SINK ALL TAPPED HOLES 100°, TO MAJOR DIA.
208 REMOVE BURRS AND SHARP EDGES TO .010 MAX.
401 BAG AND TAG PART WITH DRAWING NUMBER & REVISION LETTER.
901 DIMENSIONS SHOWN ARE TO MATCH OUTER AND INNER DIAMETER OF TUBE ON DRAWING 155Y521899.

PRELIMINARY
FOR INFORMATION OR REVIEW ONLY. DO NOT USE FOR PROCUREMENT OR FABRICATION. DRAWING CONTENT SUBJECT TO FUTURE CHANGE.
DATE 3-5-2002

SNS DWG No.
104050000-I8E-8200-B898-R00

QTY REQD	PART OR IDENTIFYING NO.	NOMENCLATURE OR DESCRIPTION	MATERIAL SPECIFICATION	ITEM NO
		ROUND BAR	304L STAINLESS STEEL	

PARTS LIST/BILL OF MATERIAL

DRAWING LEVEL: PRODUCTION

UNCLASSIFIED

UNLESS OTHERWISE SPECIFIED: DIMENSIONS ARE IN INCHES.
TOLERANCES ARE:
DECIMALS .X= ±.1 .XX= ±.01 .XXX= ±.005
ANGULAR=±.25°
MACHINED FINISH 125

155Y521897	----------
NEXT ASSEMBLY USED ON	
APPLICATION	

TASK CONTRACTOR

CAD SYSTEM & VER. UG-V16.0.4

SEE FINAL DESIGN AUTHORIZATION SHEET FOR SIGNATURES. SHEET IS FILED BY DRAWING NUMBER AT THE SNS PROJECT OFFICE.

	APPROVALS	DATE	GROUP
DESIGNED	M. CATANACH	2-4-01	SNS-3
DRAWN	H. SALAZAR	2-4-01	SNS-3
CHECKED	----------	-------	------
ENGINEERING	S. ELLIS	2-4-01	SNS-3
VACUUM	----------	-------	------
PHYSICS	----------	-------	------
APPROVED	----------	-------	------

Los Alamos
SNS DIVISION
Los Alamos National Laboratory
Los Alamos, New Mexico 87545

PROJECT: SNS

DTL
FARADAY CUP/DEGRADER
UPPER TUBE BRACKET DETAIL

SIZE	CAGE CODE	DWG NO. & CAD FILENAME	REV
D	88516	155Y521898	-A

SCALE 4/1 DO NOT SCALE SHEET 1 OF 1