REVISIONS						
ZONE	REV	DESCRIPTION	CHANGED BY	DATE	CLASS REVIEW	APPROVED
---	A	ORIGINAL ISSUE	-------	--------	NR	---
---	--	----------	-------	--------	NR	---

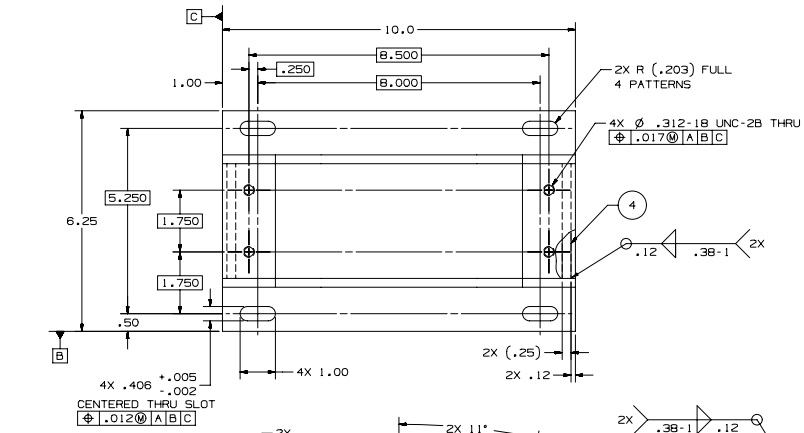

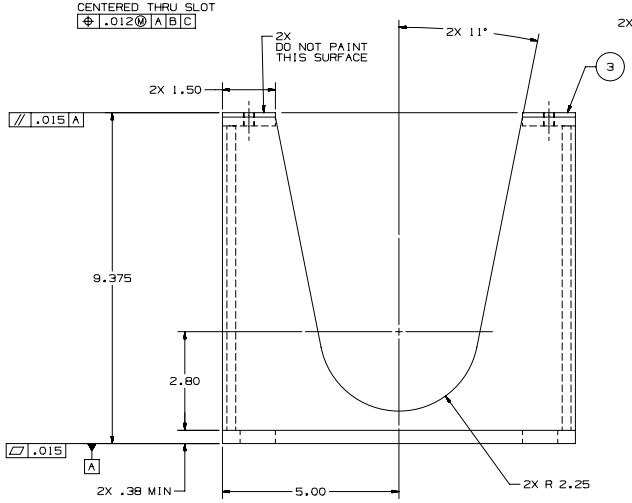

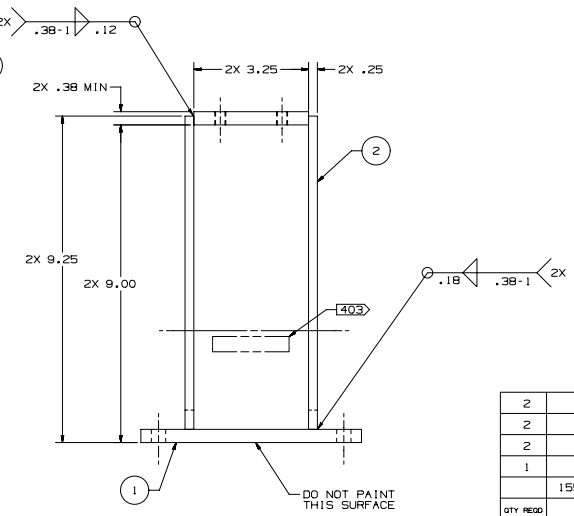

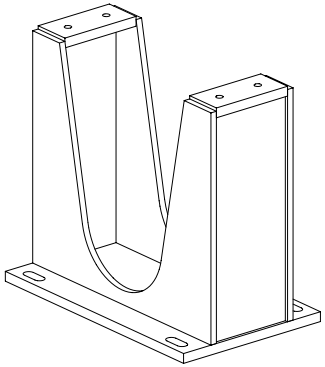

ISOMETRIC
SCALE: NONE

NOTES: UNLESS OTHERWISE SPECIFIED

101 ABBREVIATIONS PER ASME Y14.38-1999.
102 THOROUGHLY CLEAN PARTS TO REMOVE ALL OIL, GREASE, DIRT, CHIPS, ETC.
201 DIMENSIONING AND TOLERANCING PER ASME Y14.5M-1994.
202 SURFACE TEXTURE SYMBOLS PER ASME Y14.36M-1996.
203 SURFACE TEXTURE PER ASME B46.1-1995.
208 REMOVE BURRS AND SHARP EDGES TO .010 MAX.
321 WELD IN ACCORDANCE WITH AWS D1.6-1999.
403 ENGRAVE DRAWING NUMBER & REVISION LETTER, APPROXIMATELY WHERE SHOWN, IN .25" HIGH CHARACTERS.
901 PREP, PRIMER, MASK ALL MACHINED SURFACES AND PAINT PER BEST SHOP PRACTICE AND INDUSTRY STANDARDS. USE SHERWIN WILLIAMS SYSTEM 4000 COLORS, LASER BLUECODE #SW4079, LRV 16% REF S. W. ENAMEL (B54, B542-100, B52Z-400 SERIES) OR EQUIVALENT.

PRELIMINARY
FOR INFORMATION OR REVIEW ONLY. DO NOT USE FOR PROCUREMENT OR FABRICATION. DRAWING CONTENT SUBJECT TO FUTURE CHANGE.

DATE

SNS DWG No.
104050000-I8D-8200-B832-R00

QTY REQD	PART OR IDENTIFYING NO.	NOMENCLATURE OR DESCRIPTION	MATERIAL SPECIFICATION	ITEM NO
2		PLATE 1/4 THK	STEEL 1020	4
2		PLATE 1/2 THK	STEEL 1020	3
2		PLATE 1/4 THK	STEEL 1020	2
1		PLATE 1/2 THK	STEEL 1020	1
	155Y521832	WELDMENT, STAND-BEAMBOX 1		

PARTS LIST/BILL OF MATERIAL

DRAWING LEVEL: PRODUCTION

UNCLASSIFIED

TASK CONTRACTOR

CAD SYSTEM & VER.: UG V16.0.4

SEE FINAL DESIGN AUTHORIZATION SHEET FOR SIGNATURES. SHEET IS FILED BY DRAWING NUMBER AT THE SNS PROJECT OFFICE.

UNLESS OTHERWISE SPECIFIED: DIMENSIONS ARE IN INCHES. TOLERANCES ARE:
DECIMALS .X= ±.06 .XX= ±.03 .XXX= ±.005
ANGULAR= ±.25°
MACHINED: 125 FINISH

APPROVALS		DATE	GROUP
DESIGNED	D. IRELAND	8/20/01	SNS-3
DRAWN	A. ROMERO	8/20/01	SNS-3
CHECKED			
ENGINEERING			
VACUUM			
PHYSICS			
APPROVED			

NEXT ASSEMBLY USED ON
APPLICATION

Los Alamos National Laboratory
Los Alamos, New Mexico 87545
SNS DIVISION

PROJECT: SNS

DIAGNOSTICS PLATE
STAND-BEAMBOX 1
WELDMENT

SIZE	CAGE CODE	DWG NO. & CAD FILENAME	REV
D	88516	155Y521832	-A

SCALE 5/8 DO NOT SCALE SHEET 1 OF 1