REVISIONS						
ZONE	REV	DESCRIPTION	CHANGED BY	DATE	CLASS REVIEW	APPROVED
---	A	ORIGINAL ISSUE	--------	--------	NR	---
---	--	----------	--------	--------	NR	---

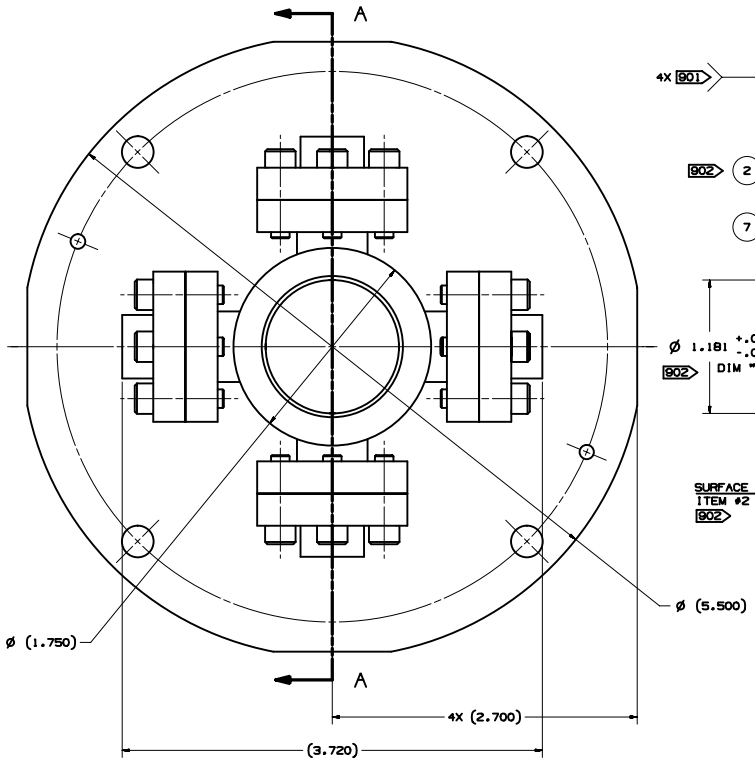

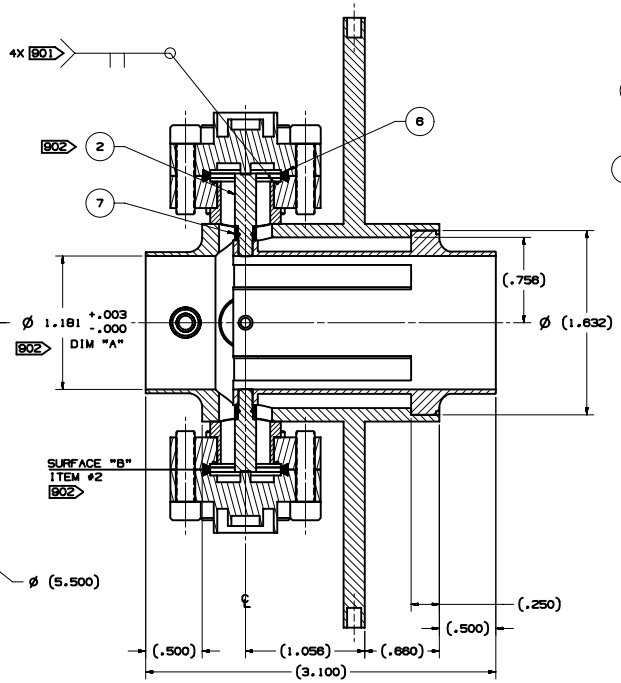

SECTION A - A

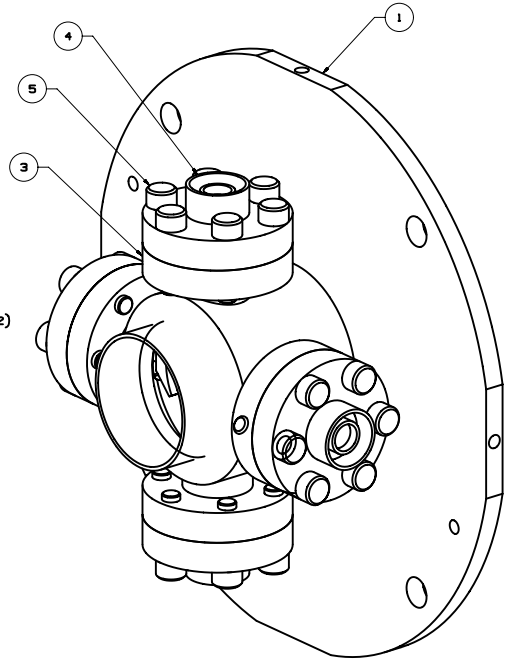

QTY REQD	PART OR IDENTIFYING NO.	NOMENCLATURE OR DESCRIPTION	MATERIAL SPECIFICATION	ITEM NO
4	155Y520173	COLLAR	SST	7
4	191000	DEL SEAL COPPER GASKET	OFHC	6
24		SCR, SCKT HD #8-32 UNC-2A X .63 LG	SST	5
4	853890-001	KAMAN SMA-F UHV CONN ASSY FEEDTHRU		4
4	130003	DEL-SEAL FLANGE BORED TAPPED	SST	3
4	155Y520102	BPM 15.0mm RADIUS PROBE DETAIL	SST	2
1	155Y520101	BPM 15.0 mm RADIUS WLD SUBASSEMBLY	SST	1

PARTS LIST/BILL OF MATERIAL

101 ABBREVIATIONS PER ASME Y14.38-1999.
102 THOROUGHLY CLEAN PARTS TO REMOVE ALL OIL, GREASE, DIRT, CHIPS, ETC.
201 DIMENSIONING AND TOLERANCING PER ASME Y14.5M-1994.
210 SULFUR BASED CUTTING OILS SHALL NOT BE USED.
214 CONTACT OF ANY MATERIAL CONTAINING FREE SILICON WITH THIS PART DURING FABRICATION, INSPECTION, OR STORAGE IS PROHIBITED.
401 BAG AND TAG PART WITH DRAWING NUMBER & REVISION LETTER.
901 FINAL ASSEMBLY SHALL BE LEAK TIGHT. LEAK RATE TO BE ESTABLISHED WITH A MASS SPECTROMETER TYPE LEAK DETECTOR THE INSTRUMENT USED SHALL BE IDENTIFIED. CALIBRATION DATA SUPPLIED SHOULD INCLUDE "SENSITIVITY" AND "STANDARD LEAK SIZE" MAXIMUM DETECTABLE LEAKAGE SHALL BE NO GREATER THAN 1.0 X 10-9 STD. CC/SEC. (HELIUM)
902 FINISH MACHINE SURFACE "B" OF ITEM #2 AS REQUIRED TO OBTAIN DIMENSION "A" WITH ITEM #4 INSTALLED 4 PLACES. DIMENSION "A" OF PART NUMBER 155Y520105-A SHALL BE CONCENTRIC WITH PART NUMBER 155Y520104-A AND CONTACT MUST BE MAINTAINED BETWEEN ITEM #2 AND ITEM #4 INDEPENDENTLY AT ASSEMBLY. DIMENSIONAL RELATIONSHIP TO BE MEASURED AT THE CENTERLINE OF ITEM #4.

SNS DWG No. 104050000-I8E-8200-A100-R00

DRAWING LEVEL: PRODUCTION

UNCLASSIFIED

TASK CONTRACTOR

CAD SYSTEM & VER.: UNIGRAPHICS V-16

SEE FINAL DESIGN AUTHORIZATION SHEET FOR SIGNATURES; SHEET IS FILED BY DRAWING NUMBER AT THE SNS PROJECT OFFICE.

UNLESS OTHERWISE SPECIFIED: DIMENSIONS ARE IN INCHES. TOLERANCES ARE:
DECIMALS .X= ±.1 .XX= ±.01 .XXX= ±.005
ANGULAR= ±.25°
MACHINED: 125 FINISH

APPROVALS		DATE	GROUP
DESIGNED	H. SALAZAR	9-28-00	SNS-3
DRAWN	H. SALAZAR	9-28-00	SNS-3
CHECKED			
ENGINEERING	J. O'HARA		
VACUUM			
PHYSICS			
APPROVED			

NEXT ASSEMBLY USED ON / APPLICATION

Los Alamos National Laboratory, Los Alamos, New Mexico 87545
SNS DIVISION

PROJECT: SNS

BPM 15.0mm RADIUS ASSEMBLY

SIZE	CAGE CODE	DWG NO. & CAD FILENAME	REV
D	88516	155Y520100	-A

SCALE 2/1 DO NOT SCALE SHEET 1 OF 1

REVISIONS						
ZONE	REV	DESCRIPTION	CHANGED BY	DATE	CLASS REVIEW	APPROVED
---	A	ORIGINAL ISSUE	--------	--------	NR	---
---	--	----------	--------	--------	NR	---

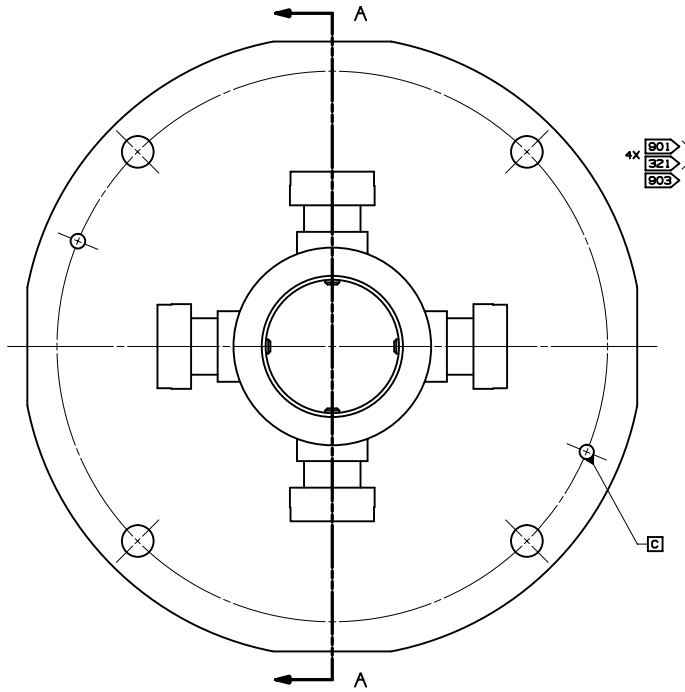

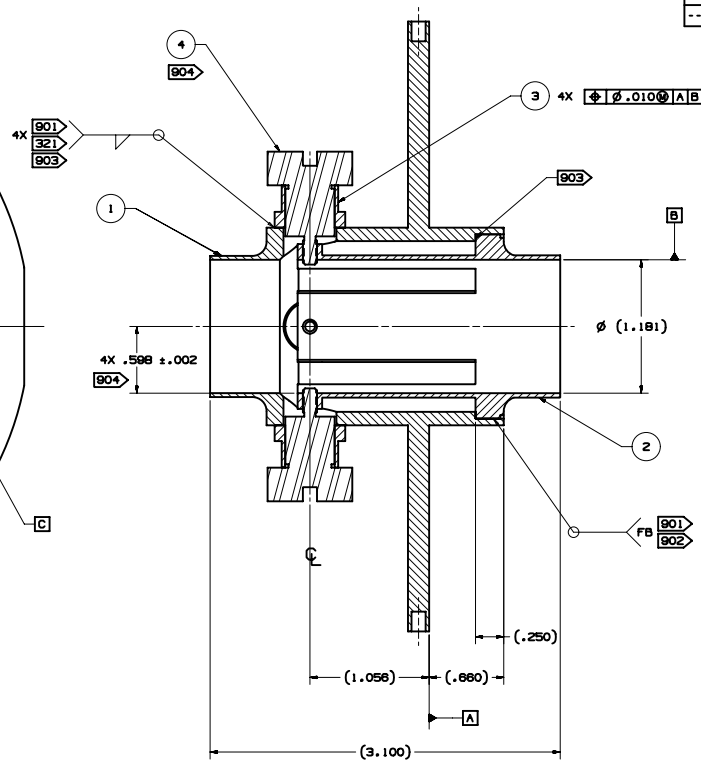

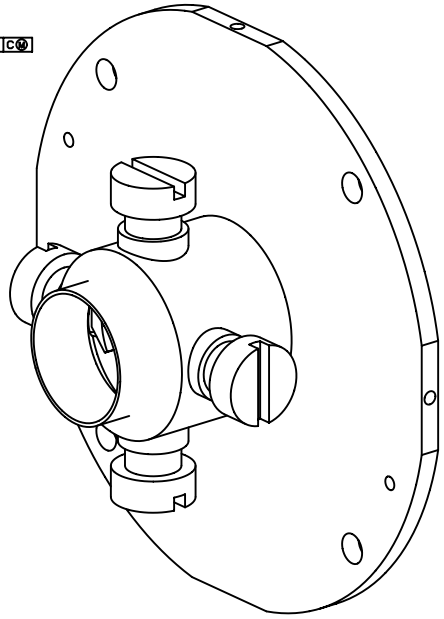

SECTION A - A

101 ABBREVIATIONS PER ASME Y14.38-1999.
102 THOROUGHLY CLEAN PARTS TO REMOVE ALL OIL, GREASE, DIRT, CHIPS, ETC.
201 DIMENSIONING AND TOLERANCING PER ASME Y14.5M-1994.
208 REMOVE BURRS AND SHARP EDGES TO .010 MAX.
210 SULFUR BASED CUTTING OILS SHALL NO BE USED.
214 CONTACT OF ANY MATERIAL CONTAINING FREE SILICON WITH THIS PART DURING FABRICATION, INSPECTION OR STORAGE IS PROHIBITED.
301 WELDING & BRAZING SYMBOLS PER AWS A2.4-1998.
321 WELD IN ACCORDANCE WITH AWS D1.6-1999. PRIOR TO BRAZE OPERATION.
322 REMOVE ITEM #4, 4 PLACES AFTER WELD AND FURNACE BRAZE.
401 BAG AND TAG PART WITH DRAWING NUMBER & REVISION LETTER.
901 FINAL ASSEMBLY SHALL BE LEAK TIGHT. LEAK RATE TO BE ESTABLISHED WITH A MASS SPECTROMETER TYPE LEAK DETECTOR THE INSTRUMENT USED SHALL BE IDENTIFIED. CALIBRATION DATA SUPPLIED SHOULD INCLUDE "SENSITIVITY" AND "STANDARD LEAK SIZE" MAXIMUM DETECTABLE LEAKAGE SHALL BE NO GREATER THAN 1.0 X 10^{-8} STD. CC/SEC. (HELIUM)
902 BRAZE IN A HYDROGEN FURNACE USING BRAZE ALLOY SIMULAR OR EQUAL TO WESGO COPPER (99.99% Cu) LIQUIDUS 1083°C.
903 MAINTAIN LINE TO LINE CONTACT BETWEEN ITEM #1 AND ITEM #2 DURING WELDING OF ITEM #3.
904 PRELOAD EACH SPRING MEMBER OF ITEM #2 TO DIMENSION SHOWN BY ADJUSTING ITEM #4 AS REQUIRED. FOUR PLACES INDEPENDENTLY PRIOR TO BRAZE OPERATION. DIMENSIONAL RELATIONSHIP MEASURED AT CENTERLINE OF ITEM #4.

QTY REQD	PART OR IDENTIFYING NO.	NOMENCLATURE OR DESCRIPTION	MATERIAL SPECIFICATION	ITEM NO
4	155Y520107	BPM 15.0 mm RADIUS ALIGNMENT PLUG	SST	4
4	155Y520108	BPM 15.0 mm RADIUS FLG WELD SPACER	SST	3
1	155Y520105	BPM 15.0 mm RADIUS ELECTRODE	SST	2
1	155Y520104	BPM 15.0 mm RADIUS COVER	SST	1

PARTS LIST/BILL OF MATERIAL

DRAWING LEVEL: PRODUCTION

UNCLASSIFIED

TASK CONTRACTOR

CAD SYSTEM & VER.: UNIGRAPHICS V-16

SEE FINAL DESIGN AUTHORIZATION SHEET FOR SIGNATURES; SHEET IS FILED BY DRAWING NUMBER AT THE SNS PROJECT OFFICE.

UNLESS OTHERWISE SPECIFIED: DIMENSIONS ARE IN INCHES. TOLERANCES ARE:
DECIMALS .X= ±.1 .XX= ±.01 .XXX= ±.005
ANGULAR= ±.25° MACHINED: 125 FINISH

APPROVALS		DATE	GROUP
DESIGNED	H. SALAZAR	9-28-00	SNS-3
DRAWN	H. SALAZAR	9-28-00	SNS-3
CHECKED			
ENGINEERING	J. O'HARA		
VACUUM			
PHYSICS			
APPROVED			

155Y520100-A ---------- NEXT ASSEMBLY USED ON APPLICATION

SNS DWG No. 104050000-I8E-8200-A101-R00

Los Alamos SNS DIVISION — Los Alamos National Laboratory, Los Alamos, New Mexico 87545

PROJECT: SNS

BPM 15.0mm RADIUS SUBASSEMBLY

SIZE	CAGE CODE	DWG NO. & CAD FILENAME	REV
D	88516	155Y520101	-A

SCALE 2/1 — DO NOT SCALE — SHEET 1 OF 1

REVISIONS						
ZONE	REV	DESCRIPTION	CHANGED BY	DATE	CLASS REVIEW	APPROVED
---	A	ORIGINAL ISSUE	-------	--------	NR	---
---	--	----------	-------	--------	NR	---

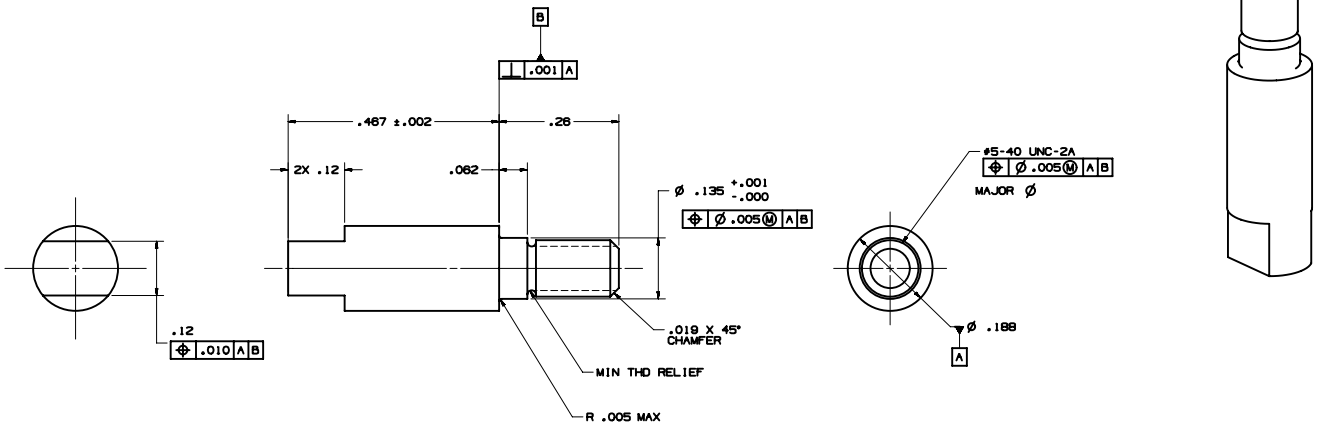

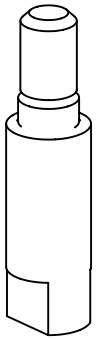

101 ABBREVIATIONS PER ASME Y14.38-1999.
102 THOROUGHLY CLEAN PARTS TO REMOVE ALL OIL, GREASE, DIRT, CHIPS, ETC.
201 DIMENSIONING AND TOLERANCING PER ASME Y14.5M-1994.
203 SURFACE TEXTURE PER ASME B46.1-1995.
204 ALL INSIDE CORNERS TO BE R.010 MAX. UNLESS OTHERWISE SPECIFIED.
208 REMOVE BURRS AND SHARP EDGES TO .010 MAX.
210 SULFUR BASED CUTTIN OILS SHALL NOT BE USED.
214 CONTACT OF ANY MATERIAL CONTAINING FREE SILICON WITH THIS PART DURING FABRICATION, INSPECTION, OR STORAGE IS PROHIBITED.
401 BAG AND TAG PART WITH DRAWING NUMBER & REVISION LETTER.

SNS DWG No. 104050000-I8E-8200-A102-R00

QTY REQD	PART OR IDENTIFYING NO.	NOMENCLATURE OR DESCRIPTION	MATERIAL SPECIFICATION	ITEM NO
--	155Y520102	PROBE	304L STAINLESS STEEL	--

PARTS LIST/BILL OF MATERIAL

DRAWING LEVEL: PRODUCTION

UNCLASSIFIED

TASK CONTRACTOR

CAD SYSTEM & VER.: UG V-16

SEE FINAL DESIGN AUTHORIZATION SHEET FOR SIGNATURES; SHEET IS FILED BY DRAWING NUMBER AT THE SNS PROJECT OFFICE.

UNLESS OTHERWISE SPECIFIED: DIMENSIONS ARE IN INCHES. TOLERANCES ARE:
DECIMALS .X= ±.1 .XX= ±.01 .XXX= ±.005
ANGULAR= ±.25°
MACHINED: 125 FINISH

155Y520100-A
NEXT ASSEMBLY USED ON
APPLICATION

APPROVALS		DATE	GROUP
DESIGNED	H. SALAZAR	9-28-00	SNS-3
DRAWN	H. SALAZAR	9-28-00	SNS-3
CHECKED	----------	--------	------
ENGINEERING	J. O'HARA	--------	------
VACUUM	----------	--------	------
PHYSICS	----------	--------	------
APPROVED	----------	--------	------

Los Alamos
Los Alamos National Laboratory
Los Alamos, New Mexico 87545
SNS DIVISION

PROJECT: SNS

BPM 15.0mm RADIUS PROBE DETAIL

SIZE	CAGE CODE	DWG NO. & CAD FILENAME	REV
D	88516	155Y520102	-A

SCALE 8/1 DO NOT SCALE SHEET 1 OF 1

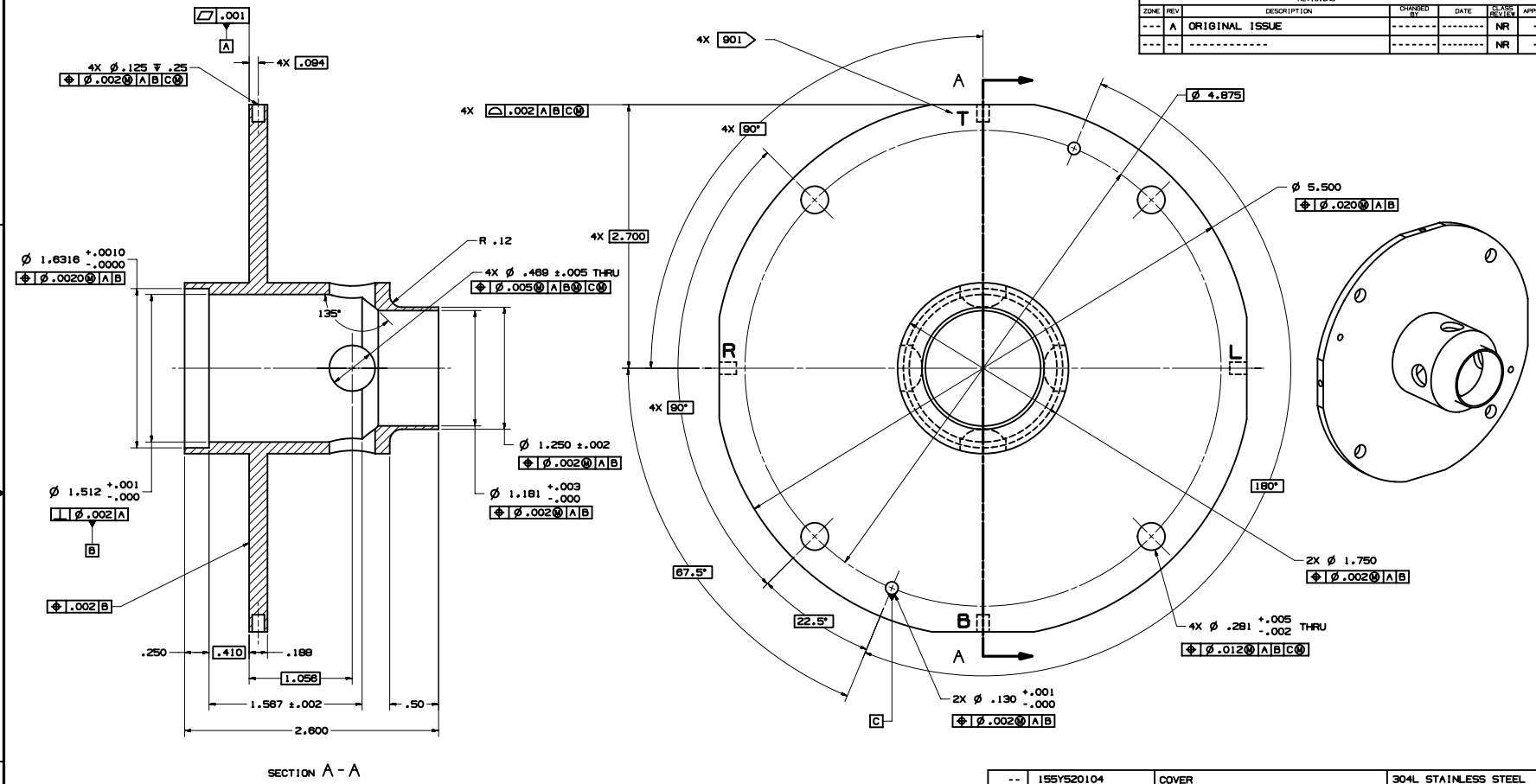

REVISIONS						
ZONE	REV	DESCRIPTION	CHANGED BY	DATE	CLASS REVIEW	APPROVED
---	A	ORIGINAL ISSUE	--------	--------	NR	---
---	--	----------	--------	--------	NR	---

101 ABBREVIATIONS PER ASME Y14.38-1999.
102 THOROUGHLY CLEAN PARTS TO REMOVE ALL OIL, GREASE, DIRT, CHIPS, ETC.
201 DIMENSIONING AND TOLERANCING PER ASME Y14.5M-1994.
203 SURFACE TEXTURE PER ASME B46.1-1995.
204 ALL INSIDE CORNERS TO BE R.010 MAX.
208 REMOVE BURRS AND SHARP EDGES TO .010 MAX.
210 SULFUR BASED CUTTING OILS SHALL NOT BE USED.
214 CONTACT OF ANY MATERIAL CONTAINING FREE SILICON WITH THIS PART DURING FABRICATION, INSPECTION, OR STORAGE IS PROHIBITED.
401 BAG AND TAG PART WITH DRAWING NUMBER & REVISION LETTER.
901 LASER ETCH ORIENTATION LETTER APPROXIMATELY WHERE SHOWN IN .13" HIGH CHARACTERS, 4 PLACES.

SNS DWG No. 104050000-I8E-8200-A104-R00

QTY REQD	PART OR IDENTIFYING NO.	NOMENCLATURE OR DESCRIPTION	MATERIAL SPECIFICATION	ITEM NO
--	155Y520104	COVER	304L STAINLESS STEEL	--

PARTS LIST/BILL OF MATERIAL

DRAWING LEVEL: PRODUCTION

UNCLASSIFIED

TASK CONTRACTOR

CAD SYSTEM & VER.: UNIGRAPHICS V-16

SEE FINAL DESIGN AUTHORIZATION SHEET FOR SIGNATURES; SHEET IS FILED BY DRAWING NUMBER AT THE SNS PROJECT OFFICE.

UNLESS OTHERWISE SPECIFIED, DIMENSIONS ARE IN INCHES. TOLERANCES ARE:
DECIMALS .X= ±.1 .XX= ±.01 .XXX= ±.005
ANGULAR= ±.25°
MACHINED: 125 FINISH

APPROVALS		DATE	GROUP
DESIGNED	H. SALAZAR	9-28-00	SNS-3
DRAWN	H. SALAZAR	9-28-00	SNS-3
CHECKED			
ENGINEERING	J. O'HARA		
VACUUM			
PHYSICS			
APPROVED			

155Y520100-A
NEXT ASSEMBLY USED ON
APPLICATION

Los Alamos National Laboratory
Los Alamos, New Mexico 87545
SNS DIVISION

PROJECT: SNS

BPM 15.0mm RADIUS COVER

SIZE	CAGE CODE	DWG NO. & CAD FILENAME	REV
D	88516	155Y520104	-A

SCALE 2/1 DO NOT SCALE SHEET 1 OF 1

REVISIONS						
ZONE	REV	DESCRIPTION	CHANGED BY	DATE	CLASS REVIEW	APPROVED
---	A	ORIGINAL ISSUE	--------	--------	NR	---
---	--	----------	--------	--------	NR	---

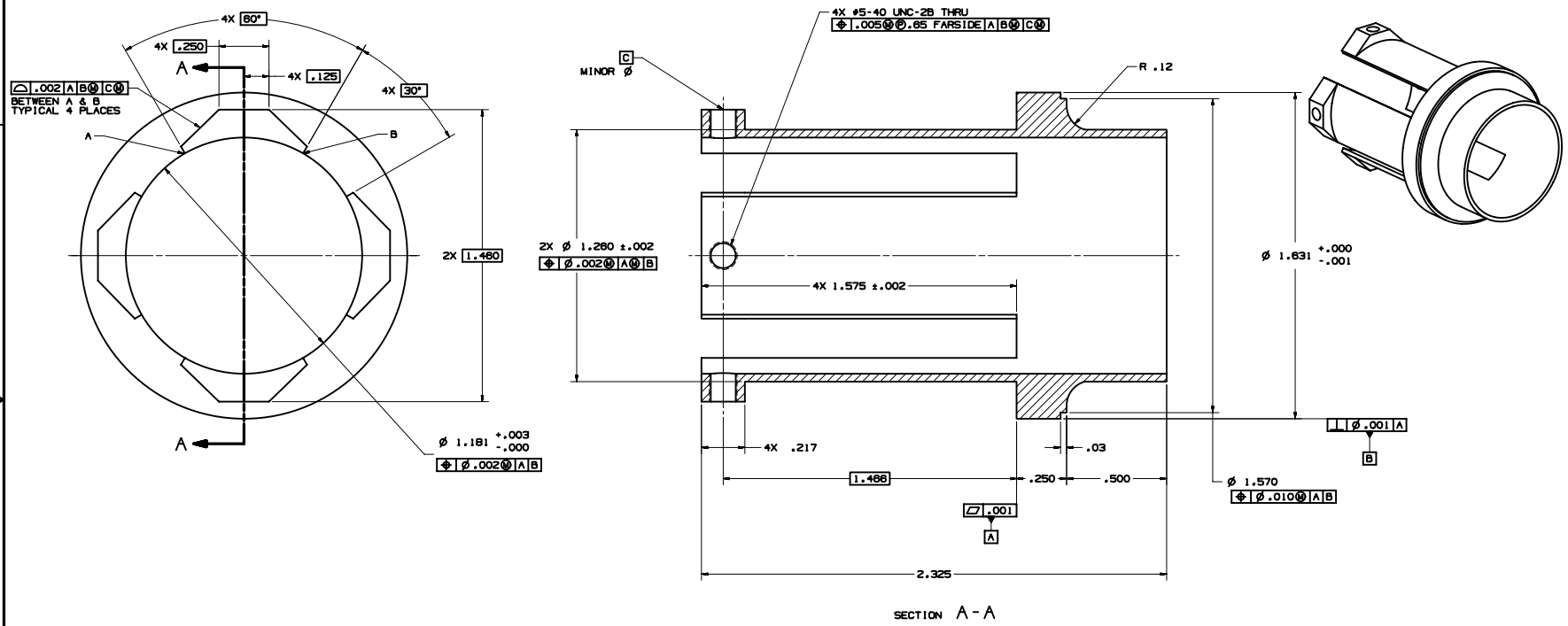

SECTION A-A

101 ABBREVIATIONS PER ASME Y14.38-1999.
102 THOROUGHLY CLEAN PARTS TO REMOVE ALL OIL, GREASE, DIRT, CHIPS, ETC.
201 DIMENSIONING AND TOLERANCING PER ASME Y14.5M-1994.
203 SURFACE TEXTURE PER ASME B46.1-1995.
204 ALL INSIDE CORNERS TO BE R.010 MAX.
206 C'SINK ALL TAPPED HOLES 100°, TO MAJOR DIA.
208 REMOVE BURRS AND SHARP EDGES TO .010 MAX.
210 SULFUR BASED CUTTING OILS SHALL NOT BE USED.
214 CONTACT OF ANY MATERIAL CONTAINING FREE SILICON WITH THIS PART DURING FABRICATION, INSPECTION, OR STORAGE IS PROHIBITED.
401 BAG AND TAG PART WITH DRAWING NUMBER & REVISION LETTER.

QTY REQD	PART OR IDENTIFYING NO.	NOMENCLATURE OR DESCRIPTION	MATERIAL SPECIFICATION	ITEM NO
--	155Y520105	ELECTRODE	304L STAINLESS STEEL	--

PARTS LIST/BILL OF MATERIAL

DRAWING LEVEL: PRODUCTION

UNCLASSIFIED

TASK CONTRACTOR

CAD SYSTEM & VER.: UNIGRAPHICS V-16

SEE FINAL DESIGN AUTHORIZATION SHEET FOR SIGNATURES; SHEET IS FILED BY DRAWING NUMBER AT THE SNS PROJECT OFFICE.

UNLESS OTHERWISE SPECIFIED: DIMENSIONS ARE IN INCHES. TOLERANCES ARE:
DECIMALS .X= ±.1 .XX= ±.01 .XXX= ±.005
ANGULAR= ±.25°
MACHINED: 125 FINISH

APPROVALS		DATE	GROUP
DESIGNED	H. SALAZAR	9-28-00	SNS-3
DRAWN	H. SALAZAR	9-28-00	SNS-3
CHECKED			
ENGINEERING	J. O'HARA		
VACUUM			
PHYSICS			
APPROVED			

155Y520100-A ---------- NEXT ASSEMBLY USED ON APPLICATION

SNS DWG No. 104050000-I8E-8200-A105-R00

Los Alamos National Laboratory, Los Alamos, New Mexico 87545
SNS DIVISION

PROJECT: SNS

BPM 15.0mm RADIUS ELECTRODE

SIZE	CAGE CODE	DWG NO. & CAD FILENAME	REV
D	88516	155Y520105	-A

SCALE 4/1 DO NOT SCALE SHEET 1 OF 1

REVISIONS						
ZONE	REV	DESCRIPTION	CHANGED BY	DATE	CLASS REVIEW	APPROVED
---	A	ORIGINAL ISSUE	--------	--------	NR	---
---	--	----------	--------	--------	NR	---

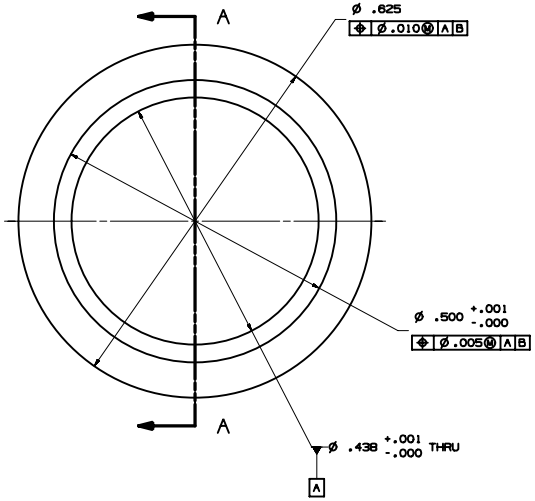

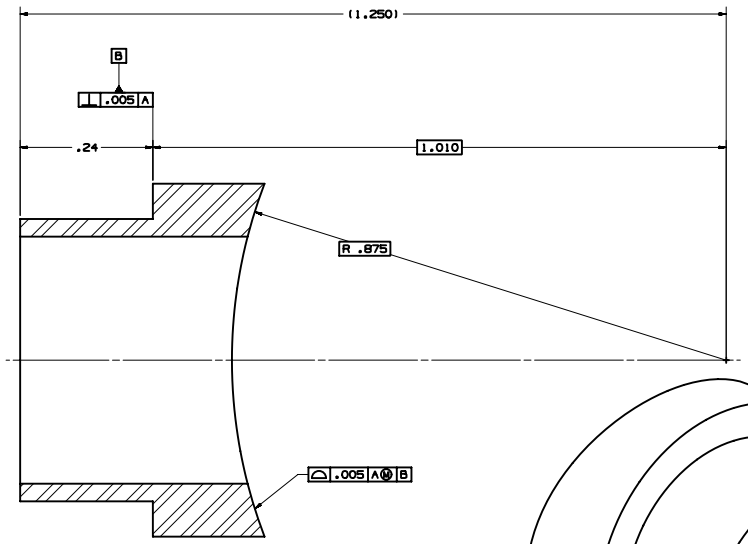

SECTION A - A

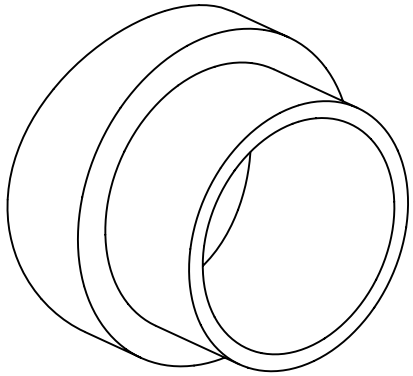

101 ABBREVIATIONS PER ASME Y14.38-1999.
102 THOROUGHLY CLEAN PARTS TO REMOVE ALL OIL, GREASE, DIRT, CHIPS, ETC.
201 DIMENSIONING AND TOLERANCING PER ASME Y14.5M-1994.
203 SURFACE TEXTURE PER ASME B46.1-1995.
204 ALL INSIDE CORNERS TO BE R.010 MAX.
208 REMOVE BURRS AND SHARP EDGES TO .010 MAX.
210 SULFUR BASED CUTTING OILS SHALL NO BE USED.
214 CONTACT OF ANY MATERIAL CONTAINING FREE SILICON WITH THIS PART DURING FABRICATION, INSPECTION, OR STORAGE IS PROHIBITED.
401 BAG AND TAG PART WITH DRAWING NUMBER & REVISION LETTER.

SNS DWG No. 104050000-I8E-8200-A106-R00

QTY REQD	PART OR IDENTIFYING NO.	NOMENCLATURE OR DESCRIPTION	MATERIAL SPECIFICATION	ITEM NO
--	155Y520106	FLANGE WELD SPACER	304L STAINLESS STEEL	--

PARTS LIST/BILL OF MATERIAL

DRAWING LEVEL: PRODUCTION

UNCLASSIFIED

TASK CONTRACTOR

CAD SYSTEM & VER.: UNIGRAPHICS V16

SEE FINAL DESIGN AUTHORIZATION SHEET FOR SIGNATURES; SHEET IS FILED BY DRAWING NUMBER AT THE SNS PROJECT OFFICE.

UNLESS OTHERWISE SPECIFIED: DIMENSIONS ARE IN INCHES. TOLERANCES ARE:
DECIMALS .X= ±.1 .XX= ±.01 .XXX= ±.005
ANGULAR= ±.25°
MACHINED: 125 FINISH

APPROVALS		DATE	GROUP
DESIGNED	H. SALAZAR	9-27-00	SNS-3
DRAWN	H. SALAZAR	9-27-00	SNS-3
CHECKED			
ENGINEERING	J. O'HARA		
VACUUM			
PHYSICS			
APPROVED			

155Y520100-A ---------- NEXT ASSEMBLY USED ON APPLICATION

Los Alamos National Laboratory, Los Alamos, New Mexico 87545
SNS DIVISION

PROJECT: SNS

BPM 15.0mm RADIUS FLANGE WELD SPACER

SIZE	CAGE CODE	DWG NO. & CAD FILENAME	REV
D	88516	155Y520106	-A

SCALE 10/1 DO NOT SCALE SHEET 1 OF 1

REVISIONS						
ZONE	REV	DESCRIPTION	CHANGED BY	DATE	CLASS REVIEW	APPROVED
---	A	ORIGINAL ISSUE	--------	--------	NR	---
---	--	----------	--------	--------	NR	---

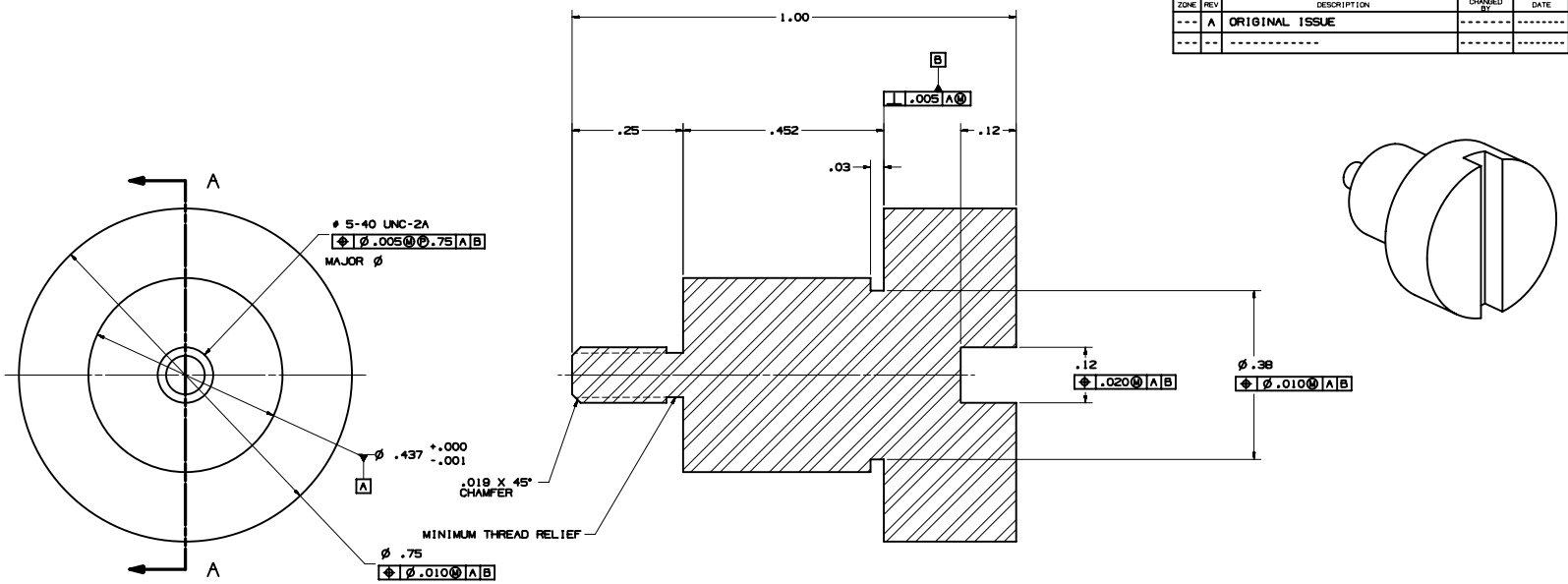

SECTION A-A

101 ABBREVIATIONS PER ASME Y14.38-1999.
102 THOROUGHLY CLEAN PARTS TO REMOVE ALL OIL, GREASE, DIRT, CHIPS, ETC.
201 DIMENSIONING AND TOLERANCING PER ASME Y14.5M-1994.
203 SURFACE TEXTURE PER ASME B46.1-1995.
204 ALL INSIDE CORNERS TO BE R.010 MAX.
208 REMOVE BURRS AND SHARP EDGES TO .010 MAX.
210 SULFUR BASED CUTTING OILS SHALL NOT BE USED.
214 CONTACT OF ANY MATERIAL CONTAINING FREE SILICON WITH THIS PART DURING FABRICATION, INSPECTION, OR STORAGE IS PROHIBITED.
401 BAG AND TAG PART WITH DRAWING NUMBER & REVISION LETTER.

SNS DWG No. 104050000-I8E-8200-A107-R00

QTY REQD	PART OR IDENTIFYING NO.	NOMENCLATURE OR DESCRIPTION	MATERIAL SPECIFICATION	ITEM NO
--	155Y520107	ALIGNMENT PLUG	304L STAINLESS STEEL	--

PARTS LIST/BILL OF MATERIAL

DRAWING LEVEL: PRODUCTION

UNCLASSIFIED

TASK CONTRACTOR

CAD SYSTEM & VER.: UNIGRAPHICS V-16

SEE FINAL DESIGN AUTHORIZATION SHEET FOR SIGNATURES; SHEET IS FILED BY DRAWING NUMBER AT THE SNS PROJECT OFFICE.

UNLESS OTHERWISE SPECIFIED, DIMENSIONS ARE IN INCHES. TOLERANCES ARE:
DECIMALS .X= ±.1 .XX= ±.01 .XXX= ±.005
ANGULAR= ±.25°
MACHINED: 125 FINISH

APPROVALS		DATE	GROUP
DESIGNED	H. SALAZAR	9-27-00	SNS-3
DRAWN	H. SALAZAR	9-27-00	SNS-3
CHECKED			
ENGINEERING	J. O'HARA		
VACUUM			
PHYSICS			
APPROVED			

155Y520101-A ---------- NEXT ASSEMBLY USED ON APPLICATION

Los Alamos National Laboratory, Los Alamos, New Mexico 87545
SNS DIVISION

PROJECT: SNS

BPM 15.0mm RADIUS ALIGNMENT PLUG

SIZE	CAGE CODE	DWG NO. & CAD FILENAME	REV
D	88516	155Y520107	-A

SCALE 10/1 DO NOT SCALE SHEET 1 OF 1