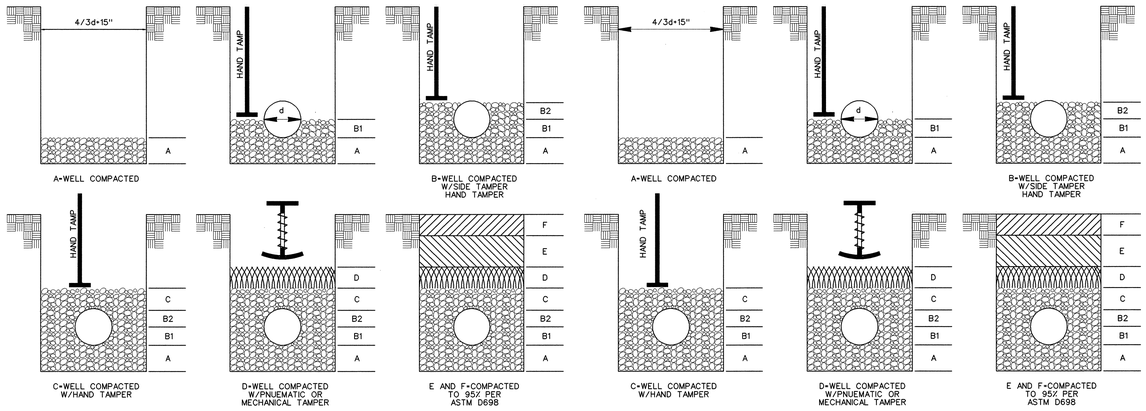

LAYER	DEPTH	MATERIAL
A	6" MIN	CLASS 1-4 FOR ALL RIGID PIPE *
B	VARIES	CLASS 1-4 FOR ALL RIGID PIPE TAMPED IN 6" MAXIMUM LAYERS.
C	6"	CLASS 1-4 FOR ALL RIGID PIPE
D	6"	SELECTED BACKFILL MATERIAL - CLASS 1-4 FOR ALL PIPE, UNLESS OTHERWISE NOTED.
E	VARIES	CLASS 1-4 FOR ALL PIPE, UNLESS OTHERWISE NOTED, 75% OF BACKFILL MATERIAL MAY CONTAIN BROKEN STONES NOT EXCEEDING 6" IN DIAMETER-TAMPED IN 6" MAXIMUM LAYERS.
F	12"	CLASS 1-4 FOR ALL PIPE - EXCEPT USE CLASS A, GRADE D CRUSHED STONE ACROSS OR ALONG EXISTING PAVEMENT UNLESS OTHERWISE NOTED.

*SEE SECTION 02222 FOR SPECIAL FOUNDATION PREPERATION

BACKFILLING AND COMPACTION OF TRENCHES IN IMPROVED AREAS

LAYER	DEPTH	MATERIAL
A	6" MIN	CLASS 1-4 FOR ALL RIGID PIPE *
B	VARIES	CLASS 1-4 FOR ALL RIGID PIPE TAMPED IN 6" MAXIMUM LAYERS.
C	6"	CLASS 1-4 FOR ALL RIGID PIPE
D	6"	SELECTED BACKFILL MATERIAL - CLASS 1-4 FOR ALL PIPE.
E	VARIES	CLASS 1-4 FOR ALL PIPE, 75% OF BACKFILL MATERIAL MAY CONTAIN BROKEN STONES NOT EXCEEDING 6" IN DIAMETER-TAMPED IN 12" MAXIMUM LAYERS.
F	12"	CLASS 3 OR 4 FOR ALL PIPE, FREE OF LARGE CLODS, VEGETABLE MATTER, DEBRIS STONE AND/OR ANY OTHER OBJECTIONABLE MATTER.

*SEE SECTION 02222 FOR SPECIAL FOUNDATION PREPERATION

BACKFILLING AND COMPACTION OF TRENCHES IN UNIMPROVED AREAS

1 — TRENCH BACKFILL DETAIL
NTS

BEDDING AND BACKFILL MATERIAL CLASSIFICATION

1. CLASS 1 MATERIALS: ANGULAR 1/4 TO 1 INCH GRADED STONE INCLUDING A NUMBER OF FILL MATERIALS THAT HAVE REGIONAL SIGNIFICANCE SUCH AS CRUSHED STONE, CINDERS, SLAG AND CRUSHED SHELLS.
2. CLASS 2 MATERIALS: COARSE SANDS AND GRAVELS WITH A MAXIMUM PARTICLE DIMENSION OF 1-1/2 INCH INCLUDING VARIOUSLY GRADED SAND AND GRAVELS CONTAINING SMALL PERCENTAGES OF FINES, GENERALLY GRANULAR AND NON-COHESIVE, EITHER WET OR DRY.
3. CLASS 3 MATERIAL: FINE SAND AND CLAYEY GRAVELS, INCLUDING FINE SANDS, SAND-CLAY MIXTURES, AND GRAVEL-CLAY MIXTURES.
4. CLASS 4 MATERIAL: SILT, SILTY CLAYS AND CLAYS, INCLUDING INORGANIC CLAYS AND SILTS OF MEDIUM TO HIGH PASTICITY AND LIQUID LIMITS.
5. CLASS 5 MATERIAL: ORGANIC SOILS, AS WELL AS SOIL CONTAINING FROZEN EARTH, DEBRIS, ROCKS LARGER THAN 1-1/2 INCHES AND OTHER FOREIGN MATERIALS.

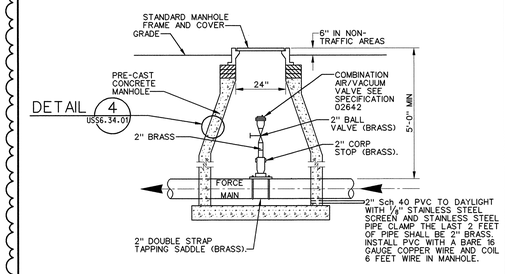

2 (US3.34.H5) TYPICAL AIR RELEASE VALVE
NTS

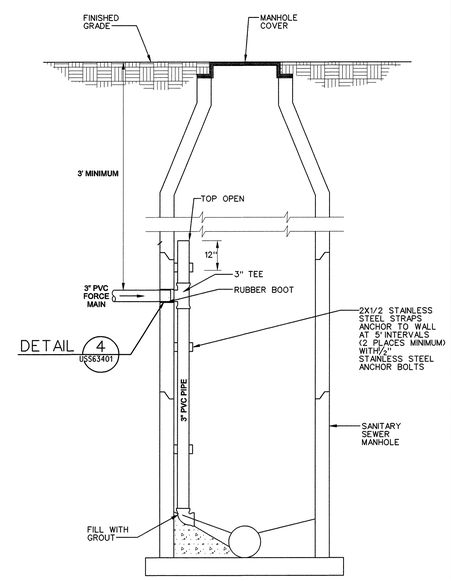

3 (US53.34.H5) INSIDE DROP CONNECTION - 3" FORCEMAIN
NTS

2 SU1-08

NO REPRESENTATION OR WARRANTY, EXPRESSED OR IMPLIED, IS MADE AS TO THE ACCURACY, COMPLETENESS OR USEFULNESS OF THE INFORMATION OR STATEMENTS CONTAINED IN THESE DRAWINGS, OR THAT THE USE OR DISCLOSURE OF ANY INFORMATION, APPARATUS, METHOD, OR PROCESS DISCLOSED IN THESE DRAWINGS MAY NOT INFRINGE PRIVATE RIGHTS OF OTHERS. NO LIABILITY IS ASSUMED WITH RESPECT TO THE USE OF, OR FOR DAMAGES RESULTING FROM THE USE OF ANY INFORMATION, APPARATUS, METHOD, OR PROCESS DISCLOSED IN THESE DRAWINGS. DRAWINGS MADE AVAILABLE FOR INFORMATION TO BIDDER ARE NOT TO BE USED FOR OTHER PURPOSES AND ARE TO BE RETURNED UPON REQUEST OF THE FORWARDING CONTRACTOR.

NUMBER OF SECTION OR DETAIL — DRAWING ON WHICH SECTION OR DETAIL IS SHOWN OR TAKEN
SECTION AND DETAIL KEY

THIS DOCUMENT CONTROLLED BY
CHANGE CONTROL SYSTEM 4
ENGINEERING PROCEDURE SNS-ENG-G001

REV	CHANGE TYPE	CHANGE CONTROL SYSTEM	CHANGE REQUEST NUMBER	DESCRIPTION	DSN	CHK	DEPT	DATE	PE	DATE	PJ	DATE	REQ	DATE	UTB	DATE	RPE	RPE NO	DATE	ST	CV	EC	EE	EM	IE	M	PD	SE	AR
2	C	4	8	CNMS REVISIONS - DCN T1-SU1-08 - 12/9/02	DH	MW		1/03		1/03		1/03					DH	102280	12/9	RW		VS				JW		TW
1	C	4	2	BASIS OF AWARD - 10/30/2001	DH	MW			CGL	10/30	TM	10/30			JRL	10/30	DH	102280	10/30	RW	AW	BS	KA	BS	BJ		BS		WS
0				CERTIFIED FOR CONSTRUCTION - 7/13/01	DH	MW			JBS	7/16	TM	7/16			JRL	7/16	DH	102280	7/13	RW	AW	BS	KA	BS	BJ		BS		WS

REVISION OR ISSUE PURPOSE — REVISION APPROVALS — SQUAD CHECK

RPE: DENNIS L. HAMMAKER, STATE OF TENNESSEE, 102280 — 12/09/02

REV.	DATE

DRAWING APPROVALS

DSGN	D HAMMAKER	7/13/01
DRW	T PAROLARI	7/13/01
CHKR	M WILLIAMS	7/13/01
SECT		
DEPT		
PE	J B SCHUBERT	7/16/01
PJ	T MCLAUGHLIN	7/16/01
REQ		
UTB	J R LAWSON	7/16/01

108040000-U8E-8000-A121

Knight/Jacobs Joint Venture
701 Scarboro Road, MS 8253
Oak Ridge, TN 37830
865-241-9433
fax 865-241-3400

BWSC Barge Waggoner Sumner & Cannon, Inc.
ENGINEERS ARCHITECTS PLANNERS LANDSCAPE ARCHITECTS AND SURVEYORS
600 Commerce Park Drive Suite 100, Oak Ridge, Tennessee 37830
Phone (865) 66-0400 Fax (865) 66-0405

UT-BATTELLE
Oak Ridge National Laboratory
managed for the DEPARTMENT OF ENERGY under U.S. GOVERNMENT contract DE-AC05-000R22725
UT-BATTELLE, LLC. • Oak Ridge, Tennessee

PROJECT NAME:
SPALLATION NEUTRON SOURCE

SITE UTILITIES
SANITARY SEWER DETAILS

1	48	49	50	PLANT	BLDG	FL	SH.	OF	TYPE	CLASS
3	U	X	X	8	8000	X	1	1	S	U
51		52		53	WBS	DRAWING NUMBER				REV
NC		NA		IN	1.8.4	USS6.34.02				2

04 DEC 2002 16:42:28